2291 SOUTH VALLEY ROAD

WILLISTOWN TOWNSHIP
CHESTER COUNTY, PENNSYLVANIA

FEBRUARY 11, 2019

AUGUST 21, 2019

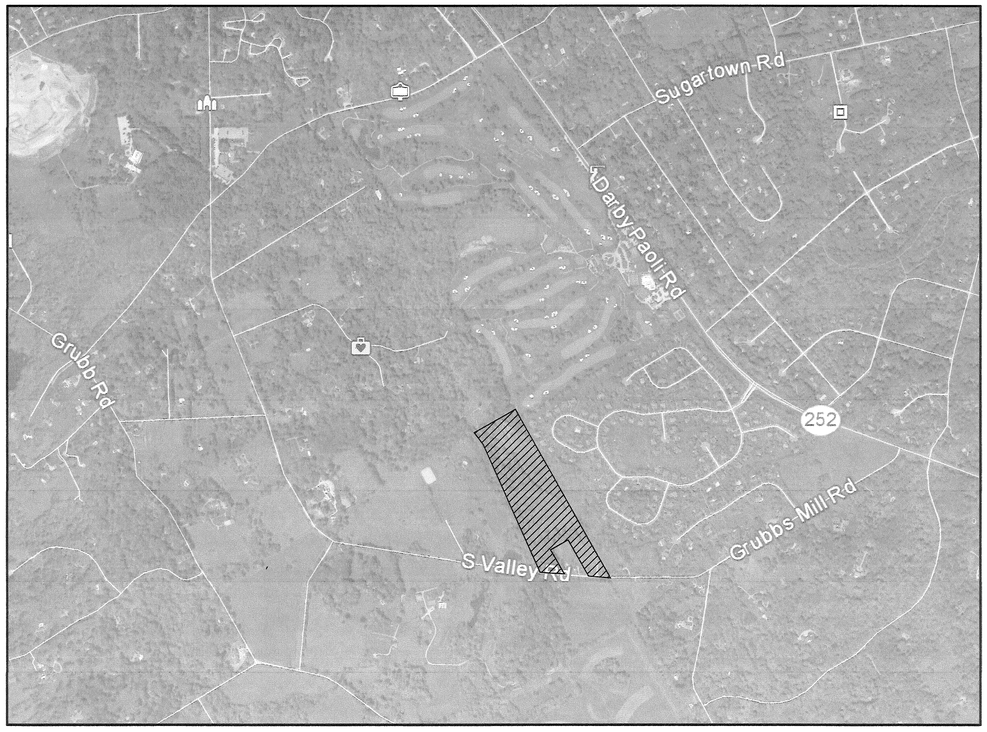

STANDARD LEGEND

EXISTING		PROPOSED
	MONUMENT FOUND	TO BE SET
	IRON PIN OR PIPE FOUND	TO BE SET
	BAFFLE	
	BUILDING LINE	
	CENTER LINE	
	CREEK BED	
	CURB LINE	
	EASEMENT LINE	
	EDGE OF PAVING	
	FENCE LINE	
	PARKING STRIPING	
	PROPERTY LINE	
	RIGHT OF WAY LINE	
	ROADWAY MARKINGS	
	SETBACK LINE	
	SIDEWALK	
	ZONING LINE	
	WETLANDS	
	FLOODPLAIN	
	GRADE (CONTOUR) LINE	
	STORM SEWER	
	SANITARY SEWER	
	SANITARY SEWER LATERAL	
	WATER LINE	
	ELECTRIC LINE	
	GAS LINE	
	TELEPHONE LINE	
	CABLE LINE	
	WOOD LINE	
	TREES	
	FIRE HYDRANT	
	WATER VALVE	
	GAS VALVE	
	ENDWALL	
	MANHOLE	
	SIGNS	
	SOIL LINE	
GeC3	SOIL TYPE	
	EROSION CONTROL BLANKET	
	CONSTRUCTION ENTRANCE	
	TREE PROTECTION	
	LIMIT OF DISTURBANCE	
	SILT FENCE	
	LIMIT OF NPDES BASIN DRAINAGE AREA	
123.5 x	SPOT ELEVATION	x 123.5
	COMPOST FILTER SOCK	
	INLET PROTECTION	
	RIP-RAP	
	ROCK FILTER	

CALL BEFORE YOU DIG!

PENNSYLVANIA LAW REQUIRES 3 WORKING DAYS NOTICE FOR CONSTRUCTION PHASE AND 10 WORKING DAYS IN DESIGN STAGE - STOP CALL

PA 1 CALL SYSTEM, INC. 1-800-242-1776

POCS SERIAL NUMBER 20173111133 / 20173111134

ACT 287, AS AMENDED, TABLE OF CONTACTS	RESPONSE 11/23/17
WILLISTOWN TOWNSHIP 688 SUGARTOWN ROAD MALVERN, PA. 19355 CONTACT: JIM STAIRS EMAIL: jstairs@willistown.pa.us	CLEAR - NO FACILITIES
EASTTOWN TOWNSHIP 566 BEAUMONT ROAD DEVON, PA. 19333 CONTACT: EDDIE MOYER EMAIL: ed.moyer@easttown.org	CLEAR - NO FACILITIES
AQUA PENNSYLVANIA INC. 762 W. LANCASTER AVE. BRYN MAWR, PA. 19010 CONTACT: STEVE PIZZI EMAIL: stpizzi@aquaamerica.com	DID NOT RESPOND THROUGH PA ONE CALL
COMCAST CABLE 1004 CORNERSTONE BLVD. DOWNINGTOWN, PA. 19335 CONTACT: TOM RUSSO EMAIL: tom_russo@cable.comcast.com	CLEAR - NO FACILITIES
PECO ENERGY C/O USIC 450 S. HENDERSON RD. SUITE B KING OF PRUSSIA, PA. 19406 CONTACT: NIKKIA SIMPKINS EMAIL: NIKKIASIMPKINS@USICLLC.COM	LINES NEARBY. DIRECT CONTACT TO FOLLOW BY FACILITY OWNER
SUNCO PIPELINE LP 525 FRITZTOWN RD. SINKING SPRING, PA. 19608 CONTACT: ONE CALL DEPARTMENT EMAIL: sxldesignreviews@sunocologistics.com	SEND PLANS
VERIZON PENNSYLVANIA LLC. 1050 VIRGINIA DR. FORT WASHINGTON, PA. 19034 CONTACT: LAURA LIPPINCOTT EMAIL: LAURA.M.LIPPINCOTT@ONE.VERIZON.COM	CLEAR - NO FACILITIES

ALL LOCATIONS OF EXISTING UTILITIES SHOWN ON THE PLAN HAVE BEEN DEVELOPED FROM EXISTING UTILITY RECORDS AND/OR ABOVE-GROUND EXAMINATION OF THE SITE. COMPLETENESS OR ACCURACY OF LOCATION AND DEPTH OF UNDERGROUND UTILITIES OR STRUCTURES CANNOT BE GUARANTEED. CONTRACTOR MUST VERIFY LOCATION AND DEPTH OF ALL UNDERGROUND UTILITIES AND FACILITIES BEFORE START OF WORK, AS PER PENNSYLVANIA ACT 287, CONTACTED 11/07/2017 , SERIAL # 20173111133 / 20173111134 .

DRAWING LIST:

1 of 14	COVER SHEET
2 of 14	RECORD PLAN
3 of 14	EXISTING FEATURES / CONSERVATION PLAN
4 of 14	GRADING & UTILITY PLAN - LOTS #1 & #2
5 of 14	GRADING & UTILITY PLAN - LOTS #3, #4 & #5
6 of 14	EROSION & SEDIMENTATION CONTROL PLAN - LOTS #1 & #2
7 of 14	EROSION & SEDIMENTATION CONTROL PLAN - LOTS #3, #4 & #5
8 of 14	EROSION & SEDIMENTATION CONTROL NOTES
9 of 14	EROSION & SEDIMENTATION CONTROL DETAILS
10 of 14	POST CONSTRUCTION STORMWATER MANAGEMENT PLAN - LOTS #1 & #2
11 of 14	POST CONSTRUCTION STORMWATER MANAGEMENT PLAN - LOTS #3, #4 & #5
12 of 14	POST CONSTRUCTION STORMWATER MANAGEMENT NOTES & DETAILS
13 of 14	EXISTING ROAD PROFILE
14 of 14	DETAILS

OWNER
KELLY GROUP HOLDINGS, INC.
2291 SOUTH VALLEY ROAD
BERWYN, PA. 19312

ENGINEER
CHAMBERS ASSOCIATES, INC
2962 SKIPPACK PIKE, P.O. BOX 678
WORCESTER, PENNSYLVANIA 19490-0678
484-991-8187

E:\Projects\2019\2019-025\PERMISSION SET 9-11-19\Aug. 5, 9/11/2019 3:52:16 AM, Plot: 1=1,0,0,0,0,0,0,0,0

GENERAL NOTES:

1. BOUNDARY INFORMATION SHOWN HEREON WAS PREPARED BY CHAMBERS ASSOCIATES, INC., AND REPRESENTS THE COMPILATION OF RECORDED INFORMATION.
2. PLAN WAS PREPARED WITHOUT THE BENEFIT OF A TITLE REPORT AND PROPERTY IS SUBJECT TO EASEMENTS, CONDITIONS, AND RESTRICTIONS ETC. CONTAINED THEREIN, RECORDED OR UNRECORDED.
3. TOPOGRAPHIC FEATURES SHOWN HEREON WERE PREPARED BY CHAMBERS ASSOCIATES, INC. AND REPRESENT THE COMPILATION OF U.S.G.S. CONTOURS AND AN 'AREA-SPECIFIC' ON-THE-GROUND SURVEY CONDUCTED IN APRIL 2008. SITE BENCHMARK: GARAGE FLOOR ELEVATION OF 408.3, AS SHOWN ON THE PLAN.
4. SAID PROPERTY IS LOCATED WITHIN AN AREA HAVING A FLOOD ZONE DESIGNATION "A" BY THE FEDERAL EMERGENCY MANAGEMENT AGENCY (FEMA), ON FLOOD INSURANCE RATE MAP NO. 42029C0165-G WITH A MAP REVISION DATE OF SEPTEMBER 29, 2017, FOR COMMUNITY NO. 422282, WILLISTOWN TOWNSHIP, CHESTER COUNTY, PENNSYLVANIA, WHICH IS THE CURRENT FLOOD INSURANCE RATE MAP FOR THE COMMUNITY IN WHICH THE SAID PREMISES IS SITUATED.

   ZONE "A" INDICATES NO BASE FLOOD ELEVATION HAS BEEN DETERMINED.
5. TAXES: 2291 SOUTH VALLEY ROAD
   T.M.P. 54-04-0008:0000
   TAX MAP BLOCK 4 UNIT 8
   DEED BOOK 5685 PAGE 1638
6. AREA GROSS 24. ACRES OF LAND MORE OR LESS.
   NET 23.7 ACRES OF LAND MORE OR LESS.
7. PROPERTY IS SERVICED BY PUBLIC SANITARY SEWER. PROPERTY IS SERVICED BY PUBLIC WATER.
8. PUBLIC WATER TAPS HAVE BEEN INSTALLED ON LOTS #3,4, & 5. LOTS #1 & 2 PROPOSE TO BE SERVED BY PUBLIC WATER FROM AQUA AMERICA. IF SERVICE IS NOT FEASIBLE A PRIVATE WELL WILL BE INSTALLED ON LOTS #1 & 2. ALL LOTS WILL HAVE PUBLIC SEWER VIA LOW PRESSURE SYSTEM THAT HAS BEEN APPROVED.
9. ALL BUILDINGS HEREAFTER BUILT ON THE PROPERTY TO BE LOCATED WITHIN THE RESTRICTED BUILDING AREA ON THE LOT ON WHICH IT IS LOCATED.
10. ANY LOT, INCLUDING LOT #5 WHICH CONTAINS THE MINGEY HOUSE, ARE PROHIBITED FROM FURTHER SUBDIVIDING OR CONTAINING MORE THAN ONE(1) RESIDENCE AT ANYTIME IN THE FUTURE, WHICH CONDITIONS WILL HEREAFTER BE MEMORIALIZED IN A RECORDED RESTRICTION UPON THE PROPERTY AND ANY PORTION THEREOF.
11. THIS PLAN IS TO BE REVIEWED BASED ON COURT ORDER FROM COURT OF COMMON PLEAS OF CHESTER COUNTY DATED MARCH 7, 2006 DOCKET NO. 04-01383, AND CAPTIONED RICHARD G. MINGEY v. WILLISTOWN TOWNSHIP, RECORDED MARCH 8, 2006.
12. A PRIVATE DRIVEWAY AGREEMENT WILL BE REQUIRED BY WILLISTOWN TOWNSHIP PRIOR TO THE ISSUANCE OF A USE AND OCCUPANCY PERMIT FOR LOTS 1, 2, 3, & 4.
13. EACH FUTURE LOT OWNER WILL BE REQUIRED TO SUBMIT AN INDIVIDUAL GRADING PERMIT FOR CONSTRUCTION OF ANY LOT.
14. EACH FUTURE LOT OWNER WILL BE REQUIRED TO SUBMIT FOR APPROVAL A BUILDING PERMIT TO WILLISTOWN TOWNSHIP FOR CONSTRUCTION OF ANY LOT.
15. THE AREA TO THE WEST SIDE OF THE PRIVATE ROAD (i.e. lots 3,4,5) MAY BE USED FOR STORMWATER MANAGEMENT IN ACCORDANCE WITH THE SETTLEMENT STIPULATION.
16. THE PURPOSE OF THIS SUBDIVISION PLAN IS TO CREATE 5 SEPARATE AND DISTINCT BUILDING LOTS IN ACCORDNACE WITH THE SETTLEMENT STIPULATION. THE LOTS MAY BE TRANSFERED IN THE FUTURE AT THE DISCREATION OF THE OWNER.
17. NO LOTS MAY BE FURTHER SUBDIVIDED, HOWEVER OPEN SPACE PARCELS MAY BE TRANSFERRED TO THIRD PARTIES FOR OWNERSHIP. ALL OPEN SPACE PARCELS TRANSFERRED MUST REMAIN AS OPEN SPACE.
18. SANITARY SEWER EDU'S HAVE BEEN PURCHASED FOR LOTS 1,2,3&4. A PLANNING MODULE HAS BEEN APPROVED (DEP CODE 1-15973-390-3J).
19. THE EXISTING 18' PRIVATE ROAD WILL BE UTILIZED FOR ACCESS TO LOTS 1,2,3&4. NO FURTHER IMPROVEMENTS TO THE PRIVATE ROAD WILL BE REQUIRED BY WILLISTOWN TOWNSHIP.
20. LANDOWNER/APPLICANT MAY NEED TO OBTAIN AN INDIVIDUAL NPDES PERMIT OR GENERAL NPDES PERMIT FROM PADEP PER SECTION 73.47.F OF THE ENVIRONMENTAL PROTECTION ORIDINANCE PRIOR TO THE ISSUANCE OF THE FIRST BUILDING PERMIT, UNLESS THE NPDES PERMIT IS NOT REQUIRED BY PADEP.

FINAL ORDER

On this _____ day of _____, 2019, pursuant to the Final Order dated _____, 2019, in the matter of *Richard G. Mingey v. Willistown Township* (Docket No. 04-01383), this Final Subdivision Plan is hereby approved by the Court of Common Pleas of the County of Chester.

By the Court:

_____

Dated:

WAIVERS

1. Waiver of SLDO Section 123-17.B.2.I - From identifying the location of all historically significant sites or structures on the parcel or on any abutting parcel.
2. Waiver of SLDO Section 123-24 - From Cul-de-sac streets having a minimum length of 250 feet and shall provide at the closed end a paved turnaround of 80 feet minimum and a minimum right-of-way diameter of 100 feet.
3. Waiver of SLDO Section 123-41.G - From capacity of the water distribution system and proposed fire hydrant locations.
4. Waiver of SLDO Section 123-47.2.B.1 - From New residential buildings setback a minimum of 300 feet from any existing or proposed transmission pipeline right-of-way.
5. Waiver of EPO Article VII, Sections 73-37.D and E. - From subdivision plan needs to address groundwater recharge.
6. Waiver of EPO Article VII, Sections 73-37.F and G. - From subdivision plan needs to address stormwater management peak runoff rate control.
7. Waiver of EPO Article X, Sections 73-52,54, and 55 - From subdivision plan needs to address the landscaping, buffering , and screening requirements.
8. Waiver of EPO Article XII, Sections 73-61 and 62 - From subdivision plan needs to address the Riparian Buffer area Conservation District requirements.
9. Waiver of SLDO Section 123-17.B.2.j - From identifying the location of all stormwater management facilities, easements (with metes and bounds description), buildings within the parcel or within 400 feet of any part of the parcel proposed to be subdivided.
10. Waiver of SLDO Section 123-25.A- From the minimum right-of-way width for a private street.

CALL BEFORE YOU DIG!
PENNSYLVANIA LAW REQUIRES 3 WORKING DAYS NOTICE FOR CONSTRUCTION PHASE AND 10 WORKING DAYS IN DESIGN STAGE - STOP CALL
PA 1 SYSTEM INC. 1-800-242-1776
POCS SERIAL NUMBER
20173111133 / 20173111134

ACT 287, AS AMENDED, TABLE OF CONTACTS
WILLISTOWN TOWNSHIP 688 SUGARTOWN ROAD MALVERN, PA. 19355
EASTTOWN TOWNSHIP 566 BEAUMONT ROAD DEVON, PA. 19333
AQUA PENNSYLVANIA INC. 762 W. LANCASTER AVE. BRYN MAWR, PA. 19010
COMCAST CABLE 1004 CORNERSTONE BLVD. DOWNINGTOWN, PA. 19335
PECO ENERGY C/O USIC 450 S. HENDERSON RD. SUITE B KING OF PRUSSIA, PA. 19406
SUNCO PIPELINE LP 525 FRITZTOWN RD. SINKING SPRING, PA. 19608
VERIZON PENNSYLVANIA LLC. 1050 VIRGINIA DR. FORT WASHINGTON, PA. 19034

ALL LOCATIONS OF EXISTING UTILITIES SHOWN ON THE PLAN HAVE BEEN DEVELOPED FROM EXISTING UTILITY RECORDS AND/OR ABOVE-GROUND EXAMINATION OF THE SITE. COMPLETENESS OR ACCURACY OF LOCATION AND DEPTH OF UNDERGROUND UTILITIES OR STRUCTURES CANNOT BE GUARANTEED. CONTRACTOR MUST VERIFY LOCATION AND DEPTH OF ALL UNDERGROUND UTILITIES AND FACILITIES BEFORE START OF WORK, AS PER PENNSYLVANIA ACT 287, CONTACTED 11/07/2017 , SERIAL # 20173111133 / 20173111134

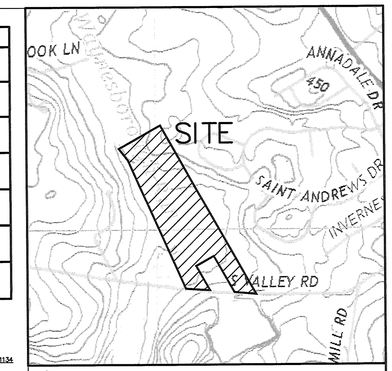

U.S.G.S. QUADRANGLE
VALLEY FORGE
1" = 800'

SURVEYOR

I HEREBY CERTIFY THAT THIS PLAN REPRESENTS A SURVEY MADE BY ME, THAT THE MONUMENTS SHOWN HEREON EXIST AS LOCATED AND THAT ALL DIMENSIONAL DETAILS ARE CORRECT. THE ERROR OF CLOSURE SHALL NOT BE GREATER THAN ONE PART IN 10,000.

Registered Surveyor Date

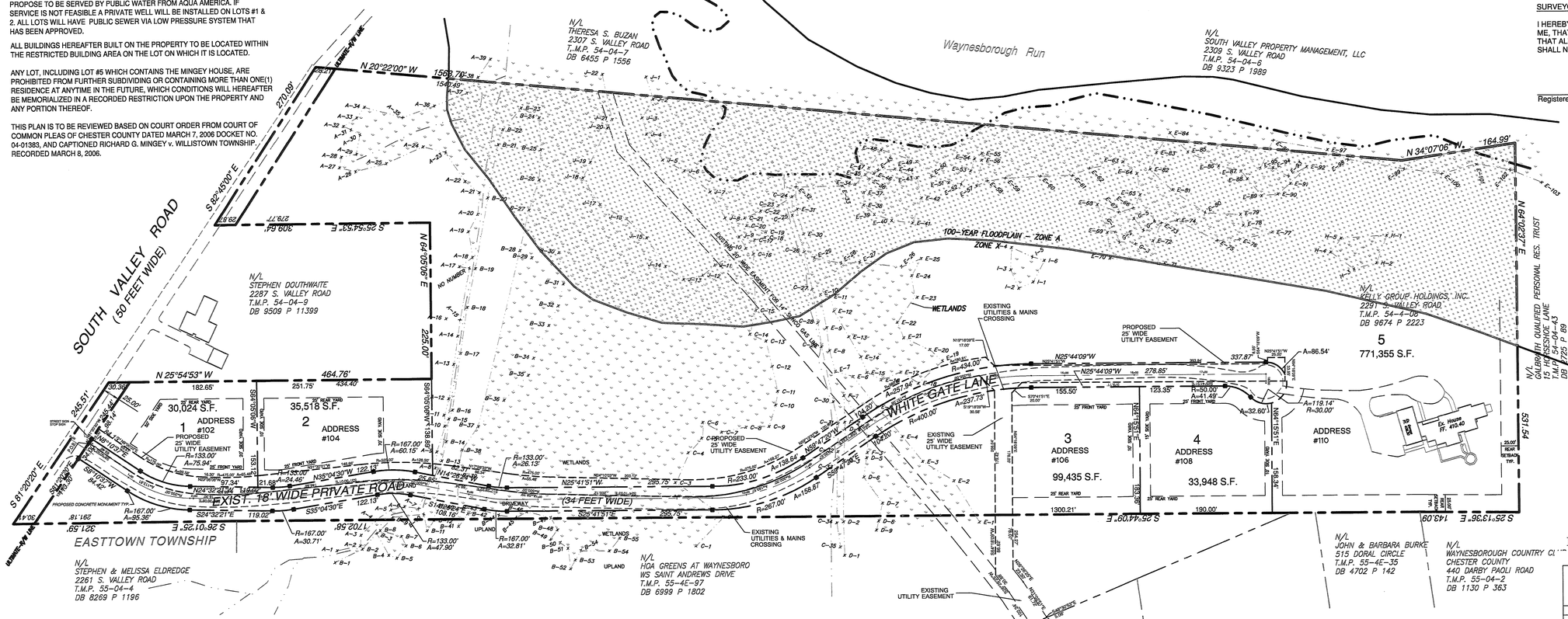

WETLANDS MARKERS SET BY SCHMID & CO., INC. ON APRIL 28 & 30, 1999; LOCATED BY HOWARD W. DORAN ENGINEERING AND SURVEYING, MAY, 1999.

WETLAND AREAS RECERTIFIED BY SCHMID & CO., INC. IN APRIL 2003. NO CHANGES TO DELINEATED WETLAND AREAS.

SETTLEMENT STIPULATIONS

	REQUIRED
NUMBER OF LOTS =	5
MIN. FRONT YARD =	25 FT.
MIN. REAR YARD =	25 FT.
MIN. SIDE YARD =	10/25 FT. AGGREGATE
MAX. BUILDING COVERAGE =	30%
MAX. BUILDING HEIGHT =	35 FT.
MAX. IMPERVIOUS COVERAGE =	40%

EQUITABLE OWNER/ APPLICANT:
KELLY GROUP HOLDINGS, INC.
2291 SOUTH VALLEY ROAD
BERWYN, PA. 19312

PRELIMINARY/FINAL LAND DEVELOPMENT

80 0 80 160 240
GRAPHIC SCALE

NO.	DATE	DESCRIPTION	BY
1	8/21/19	REV. AS PER TWP. ENG. LETTER DATED 4/15/19	JAS

SETTLEMENT AGREEMENT
RECORD PLAN

PREPARED FOR
2291 SOUTH VALLEY ROAD
WILLISTOWN TOWNSHIP
CHESTER COUNTY
PENNSYLVANIA

Chambers Associates, Inc.
Consulting Engineers and Surveyors
2962 Skippack Pike P.O. Box 676
Worcester, PA 19490-0676
484-991-8187

SCALE	DATE	JOB	DRAWING NO.
1"=80'	2-11-19	713-005.03	SHEET 2 of 14
MANAGER: JPH		DRAWN BY: JAS	

NATURAL RESOURCE PROTECTION AND DENSITY CALCULATIONS(§ 73-11)

Gross Land Area	less Public Road R/W	less Private Road R/W	less Utilities R/W	Total Base Site Area
24 Ac.	0.29 Ac.	1.43 Ac.	0.44 Ac.	21.8 Ac.
Natural Resource	**Acres Measured**	**Resource Protection Ratio**	**Protected Land**	
Floodplain	6.05 Ac.	100%	6.05 Ac.	
Wetlands	0.77	100%	0.77 Ac.	
Riparian Buffers	0.00	100%	0.00	
Slopes greater than or equal to 25%	0.20 Ac.	100%	0.20 Ac.	
Slopes 15% to less then 25%	0.32 Ac.	50%	0.16 Ac.	
Woodlands	9.83 Ac.	75%	7.37 Ac.	
Hydric Soils	0.00	50%	0.00	
TOTAL PROTECTED LANDS			14.6 Ac.	
DEVELOPABLE LANDS (Base Site less Protected Lands)				7.2 Ac.
PARCEL YIELD (Developable land / Lot Size = Density)				

BASE SITE AREA

Overall Tract	1,045,236 S.F.	23.99 Acres
Public R/W	- 12,849 S.F.	- 0.29 Acres
Private R/W	- 62,108 S.F.	- 1.43 Acres
Utility R/W	- 19,098 S.F.	- 0.44 Acres
Remaining Site	**950,849 S.F.**	**21.83 Acres**

FLOOD PLAIN AREA

North Area	214,940 S.F.	4.93 Acres
South Area	48,592 S.F.	1.12 Acres
Total	263,532 S.F.	6.05 Acres

WETLANDS AREA

Total	33,758 S.F.	0.77 Acres

STEEP SLOPES AREA

15% TO 25%		
Area #1	8,530 S.F.	0.196 Acres
Area #2	135 S.F.	0.003 Acres
Area #3	1,913 S.F.	0.044 Acres
Area #4	1,244 S.F.	0.029 Acres
Area #5	409 S.F.	0.009 Acres
Area #6	1,916 S.F.	0.044 Acres
Total	**14,147 S.F.**	**0.33 Acres**
25% +	**8,771 S.F.**	**0.20 Acres**

WOODLANDS (REMAINING) **AREA**

Trees #1	149,363 S.F.	3.43 Acres
Trees #2	62,649 S.F.	1.44 Acres
Trees #3	149,181 S.F.	3.42 Acres
Trees #4	1,621 S.F.	0.04 Acres
Trees #5	29,407 S.F.	0.68 Acres
Trees #6	19,172 S.F.	0.44 Acres
Trees #7	11,668 S.F.	0.27 Acres
Trees #8	5,004 S.F.	0.12 Acres
Total	**428,065 S.F.**	**9.83 Acres**

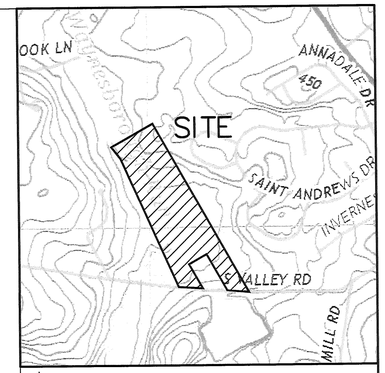

U.S.G.S. QUADRANGLE
VALLEY FORGE
1" = 800'

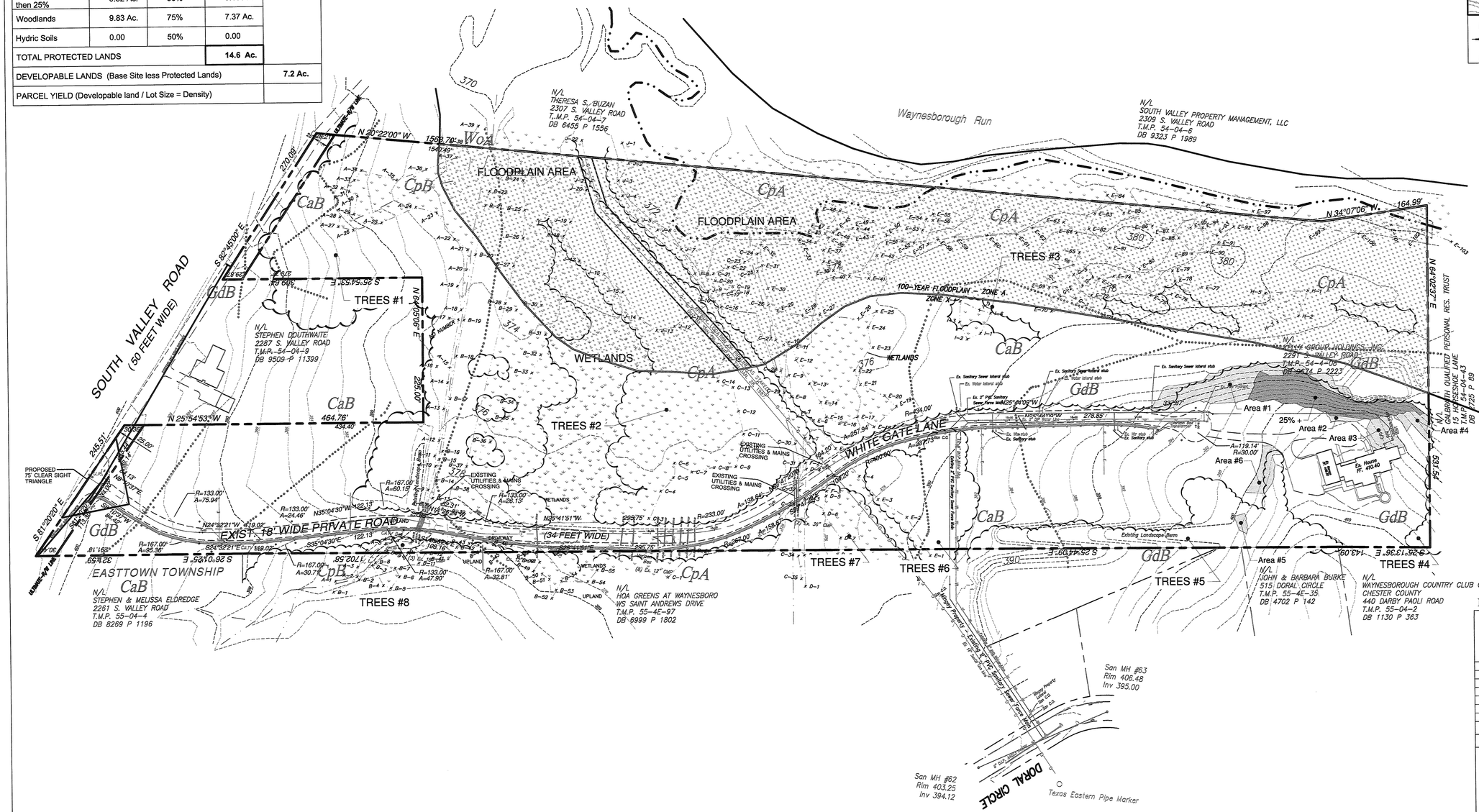

LEGEND

- 100 YEAR FLOODPLAIN
- WETLANDS
- WOODLANDS
- PUBLIC R/W
- PRIVATE R/W
- UTILITY R/W
- 15-25% STEEP SLOPES
- 25% +STEEP SLOPES

PRELIMINARY/FINAL LAND DEVELOPMENT

80 0 80 160 240
GRAPHIC SCALE

NO.	DATE	DESCRIPTION	BY
1	8/21/19	REV. AS PER TWP. ENG. LETTER DATED 4/15/19	JAS

SETTLEMENT AGREEMENT

EXISTING FEATURES / CONSERVATION PLAN

PREPARED FOR

2291 SOUTH VALLEY ROAD

WILLISTOWN TOWNSHIP
CHESTER COUNTY
PENNSYLVANIA

Chambers Associates, Inc.
Consulting Engineers and Surveyors
2962 Skippack Pike P.O. Box 678
Worcester, PA 19490-0678
484-991-8187

SCALE	DATE	JOB	DRAWING NO.
1"=80'	2-11-19	713-005.03	SHEET 3 of 14
MANAGER: JPH		DRAWN BY: JAS	

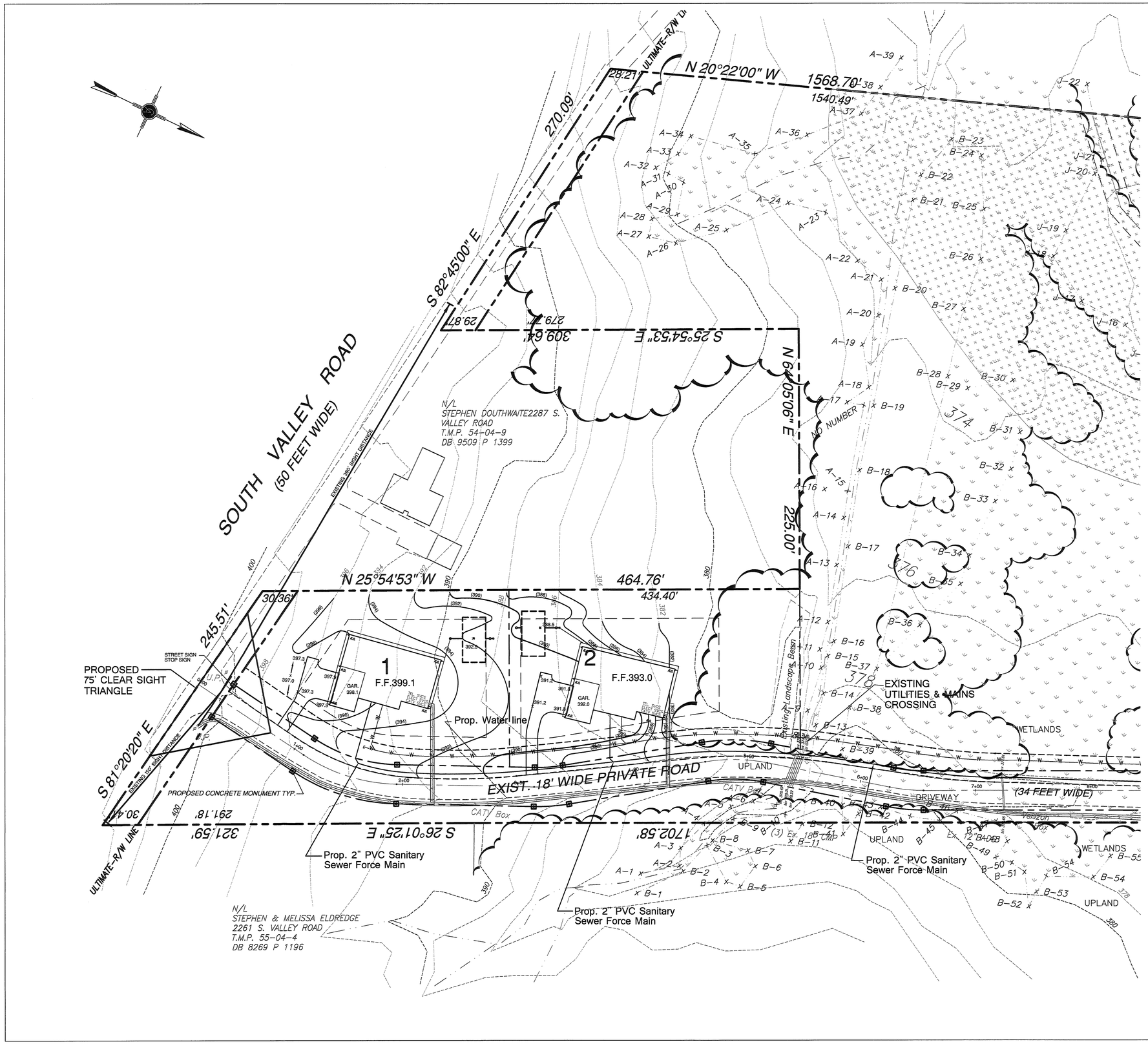

ACT 287, AS AMENDED, TABLE OF CONTACTS
WILLISTOWN TOWNSHIP 688 SUGARTOWN ROAD MALVERN, PA. 19355
EASTTOWN TOWNSHIP 566 BEAUMONT ROAD DEVON, PA. 19333
AQUA PENNSYLVANIA INC. 762 W. LANCASTER AVE. BRYN MAWR, PA. 19010
COMCAST CABLE 1004 CORNERSTONE BLVD. DOWNINGTOWN, PA. 19335
PECO ENERGY C/O USIC 450 S. HENDERSON RD. SUITE B KING OF PRUSSIA, PA. 19406
SUNCO PIPELINE LP 525 FRITZTOWN RD. SINKING SPRING, PA. 19608
VERIZON PENNSYLVANIA LLC. 1050 VIRGINIA DR. FORT WASHINGTON, PA. 19034

ALL LOCATIONS OF EXISTING UTILITIES SHOWN ON THE PLAN HAVE BEEN DEVELOPED FROM EXISTING UTILITY RECORDS AND/OR ABOVE-GROUND EXAMINATION OF THE SITE. COMPLETENESS OR ACCURACY OF LOCATION AND DEPTH OF UNDERGROUND UTILITIES OR STRUCTURES CANNOT BE GUARANTEED. CONTRACTOR MUST VERIFY LOCATION AND DEPTH OF ALL UNDERGROUND UTILITIES AND FACILITIES BEFORE START OF WORK, AS PER PENNSYLVANIA ACT 287, CONTACTED 11/07/2017 SERIAL # 20173111133 / 20173111134

CALL BEFORE YOU DIG!
PENNSYLVANIA LAW REQUIRES
3 WORKING DAYS NOTICE FOR
CONSTRUCTION PHASE AND 10 WORKING
DAYS IN DESIGN STAGE - STOP CALL
PA 1 SERIAL NO.
1-800-242-1776
POCS SERIAL NUMBER
20173111133 / 20173111134

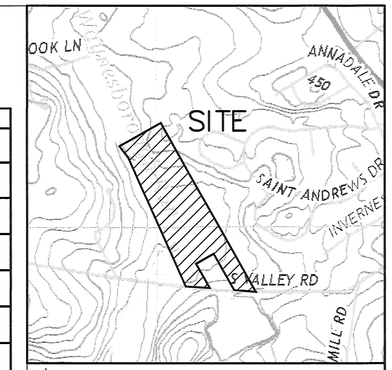

U.S.G.S. QUADRANGLE
VALLEY FORGE
1" = 800'

GENERAL NOTES:

1. SANITARY SEWERS SHOULD BE CONSTRUCTED IN ACCORDANCE WITH THE WILLISTOWN TOWNSHIP STANDARD SPECIFICATIONS.
2. A HORIZONTAL SEPARATION OF 10 FEET AND/OR A VERTICAL CLEARANCE OF 18 INCHES SHALL BE MAINTAINED BETWEEN THE SANITARY SEWER AND ANY OTHER UTILITY PIPELINES. WHERE PIPELINES MUST CROSS UNDER A SEWER, THE INSTALLATION MUST ALSO PROVIDE ADEQUATE STRUCTURAL SUPPORT FOR THE SEWER TO PREVENT DEFLECTION AND BREAKING OF THE SEWER. WHERE PROPER CLEARANCES CANNOT BE PROVIDED THE SEWER SHALL BE CONCRETE ENCASED FOR A DISTANCE OF 10 FEET ON EITHER SIDE OF THE CONFLICT.
3. A MINIMUM COVER OF 4 FEET SHOULD BE MAINTAINED.
4. SEWERS ARE BASED ON PROVIDING SERVICE TO THE FIRST FLOOR.
5. HOUSE LOCATION AND FOOTPRINTS ARE APPROXIMATE AND SUBJECT TO CHANGE.

PRELIMINARY/FINAL LAND DEVELOPMENT

40 0 40 80 120
GRAPHIC SCALE

NO.	DATE	DESCRIPTION	BY
1	8/21/19	REV. AS PER TWP. ENG. LETTER DATED 4/15/19	JAS

SETTLEMENT AGREEMENT

GRADING & UTILITY PLAN – LOTS #1 & #2

PREPARED FOR

2291 SOUTH VALLEY ROAD

WILLISTOWN TOWNSHIP
CHESTER COUNTY
PENNSYLVANIA

Chambers Associates, Inc.
Consulting Engineers and Surveyors
2962 Skippack Pike P.O. Box 678
Worcester, PA 19490-0678
484-991-8187

SCALE	DATE	JOB	DRAWING NO.
1"=40'	2-11-19	713-005.03	SHEET 4 of 14
MANAGER: JPH		DRAWN BY: JAS	

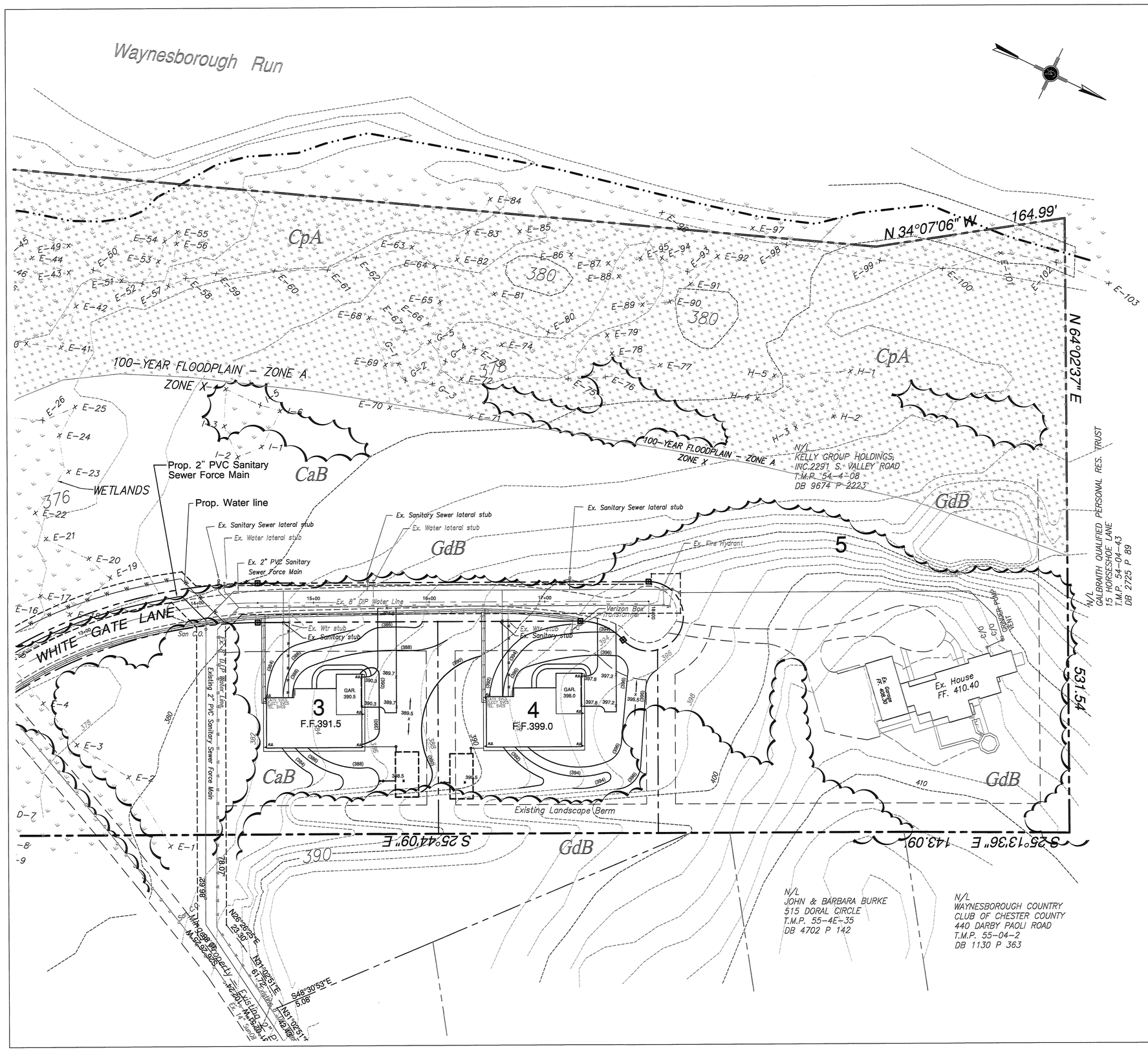

ACT 287, AS AMENDED, TABLE OF CONTACTS
WILLISTOWN TOWNSHIP 688 SUGARTOWN ROAD MALVERN, PA. 19355
EASTTOWN TOWNSHIP 566 BEAUMONT ROAD DEVON, PA. 19333
AQUA PENNSYLVANIA INC. 762 W. LANCASTER AVE. BRYN MAWR, PA. 19010
COMCAST CABLE 1004 CORNERSTONE BLVD. DOWNINGTOWN, PA. 19335
PECO ENERGY C/O USIC 450 S. HENDERSON RD. SUITE B KING OF PRUSSIA, PA. 19406
SUNCO PIPELINE LP 525 FRITZTOWN RD. SINKING SPRING, PA. 19608
VERIZON PENNSYLVANIA LLC. 1050 VIRGINIA DR. FORT WASHINGTON, PA. 19034

ALL LOCATIONS OF EXISTING UTILITIES SHOWN ON THE PLAN HAVE BEEN DEVELOPED FROM EXISTING UTILITY RECORDS AND/OR ABOVE-GROUND EXAMINATION OF THE SITE. COMPLETENESS OR ACCURACY OF LOCATION AND DEPTH OF UNDERGROUND UTILITIES OR STRUCTURES CANNOT BE GUARANTEED. CONTRACTOR MUST VERIFY LOCATION AND DEPTH OF ALL UNDERGROUND UTILITIES AND FACILITIES BEFORE START OF WORK, AS PER PENNSYLVANIA ACT 287, CONTACTED 11/07/2017 , SERIAL # 20173111133 / 20173111134

CALL BEFORE YOU DIG!
PENNSYLVANIA LAW REQUIRES
3 WORKING DAYS NOTICE FOR
CONSTRUCTION PHASE AND 10 WORKING
DAYS IN DESIGN STAGE - STOP CALL
PA1 SYSTEM, INC. 1-800-242-1776
POCS SERIAL NUMBER
20173111133 / 20173111134

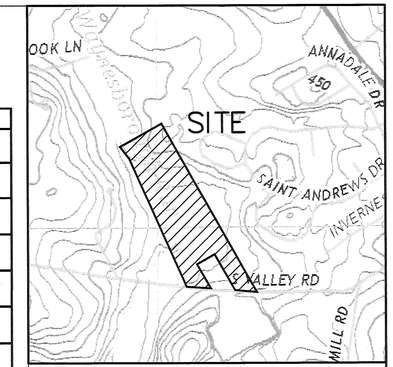

U.S.G.S. QUADRANGLE
VALLEY FORGE
1" = 800'

GENERAL NOTES:

1. SANITARY SEWERS SHOULD BE CONSTRUCTED IN ACCORDANCE WITH THE WILLISTOWN TOWNSHIP STANDARD SPECIFICATIONS.
2. A HORIZONTAL SEPARATION OF 10 FEET AND/OR A VERTICAL CLEARANCE OF 18 INCHES SHALL BE MAINTAINED BETWEEN THE SANITARY SEWER AND ANY OTHER UTILITY PIPELINES. WHERE PIPELINES MUST CROSS UNDER A SEWER, THE INSTALLATION MUST ALSO PROVIDE ADEQUATE STRUCTURAL SUPPORT FOR THE SEWER TO PREVENT DEFLECTION AND BREAKING OF THE SEWER. WHERE PROPER CLEARANCES CANNOT BE PROVIDED THE SEWER SHALL BE CONCRETE ENCASED FOR A DISTANCE OF 10 FEET ON EITHER SIDE OF THE CONFLICT.
3. A MINIMUM COVER OF 4 FEET SHOULD BE MAINTAINED.
4. SEWERS ARE BASED ON PROVIDING SERVICE TO THE FIRST FLOOR.
5. HOUSE LOCATION AND FOOTPRINTS ARE APPROXIMATE AND SUBJECT TO CHANGE.

PRELIMINARY/FINAL LAND DEVELOPMENT

40 0 40 80 120
GRAPHIC SCALE

NO.	DATE	DESCRIPTION	BY
1	8/21/19	REV. AS PER TWP. ENG. LETTER DATED 4/15/19	JAS

SETTLEMENT AGREEMENT

GRADING & UTILITY PLAN - LOTS #3, #4 & #5

PREPARED FOR

2291 SOUTH VALLEY ROAD

WILLISTOWN TOWNSHIP
CHESTER COUNTY
PENNSYLVANIA

Chambers Associates, Inc.
Consulting Engineers and Surveyors
2962 Skippack Pike P.O. Box 678
Worcester, PA 19490-0678
484-991-8187

SCALE	DATE	JOB	DRAWING NO.
1"=40'	2-11-19	713-005.03	SHEET 5 of 14
MANAGER: JPH		DRAWN BY: JAS	

L:\Projects\713005.03\DWG\REVISION SET 9-11-19.dwg, 5, 9/11/2019 7:55:49 PM, Kevin VP C10 1201 FULL

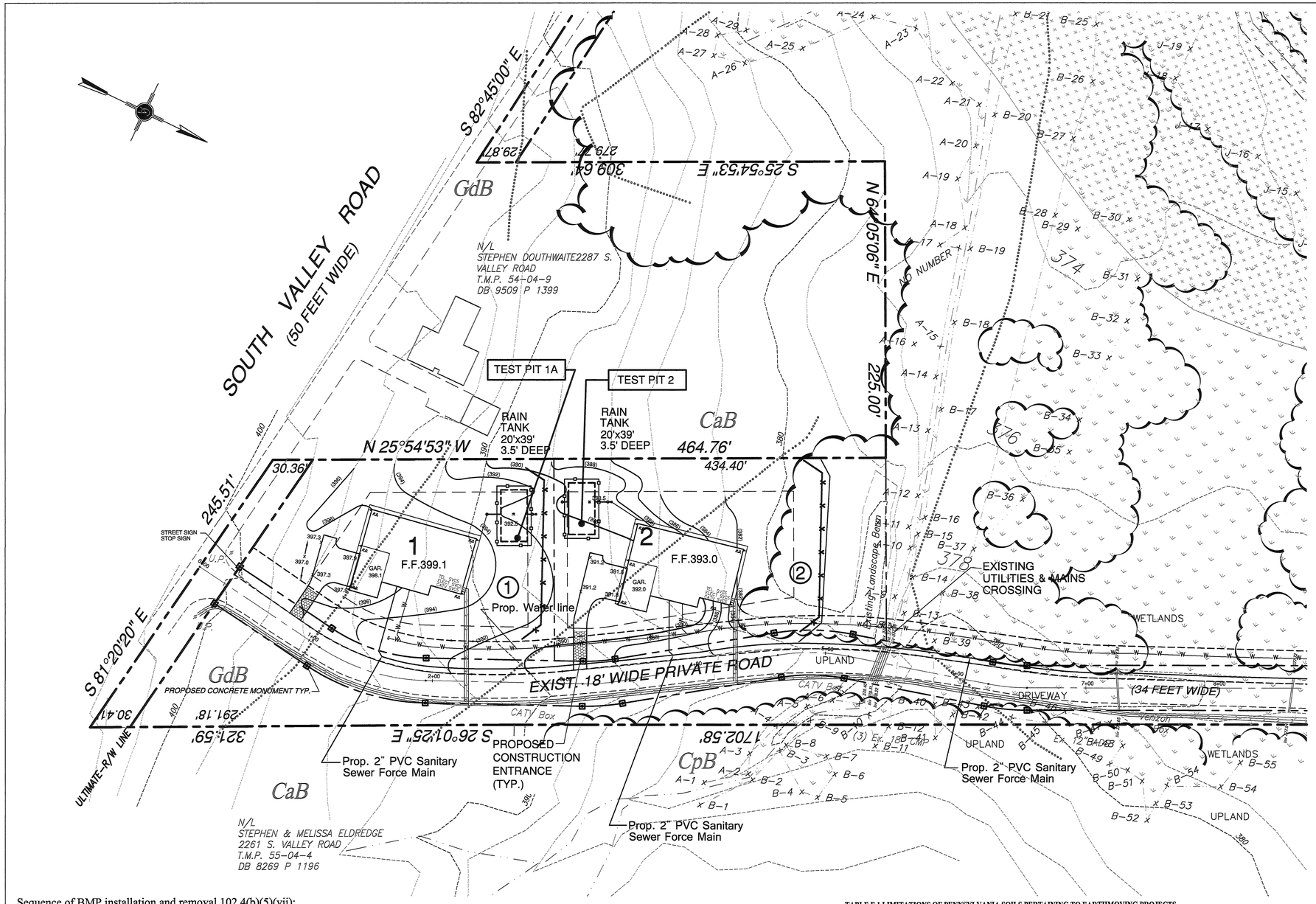

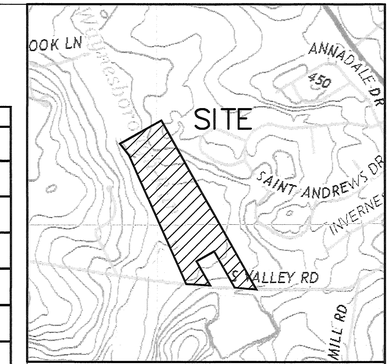

U.S.G.S. QUADRANGLE
VALLEY FORGE
1" = 800'

ACT 287, AS AMENDED, TABLE OF CONTACTS
WILLISTOWN TOWNSHIP 688 SUGARTOWN ROAD MALVERN, PA. 19355
EASTTOWN TOWNSHIP 566 BEAUMONT ROAD DEVON, PA. 19333
AQUA PENNSYLVANIA INC. 762 W. LANCASTER AVE. BRYN MAWR, PA. 19010
COMCAST CABLE 1004 CORNERSTONE BLVD. DOWNINGTOWN, PA. 19335
PECO ENERGY C/O USIC 450 S. HENDERSON RD. SUITE B KING OF PRUSSIA, PA. 19406
SUNCO PIPELINE LP 525 FRITZTOWN RD. SINKING SPRING, PA. 19608
VERIZON PENNSYLVANIA LLC. 1050 VIRGINIA DR. FORT WASHINGTON, PA. 19034

ALL LOCATIONS OF EXISTING UTILITIES SHOWN ON THE PLAN HAVE BEEN DEVELOPED FROM EXISTING UTILITY RECORDS AND/OR ABOVE-GROUND EXAMINATION OF THE SITE. COMPLETENESS OR ACCURACY OF LOCATION AND DEPTH OF UNDERGROUND UTILITIES OR STRUCTURES CANNOT BE GUARANTEED. CONTRACTOR MUST VERIFY LOCATION AND DEPTH OF ALL UNDERGROUND UTILITIES AND FACILITIES BEFORE START OF WORK, AS PER PENNSYLVANIA ACT 287, CONTACTED 11/07/2017 SERIAL # 20173111133 / 20173111134

CALL BEFORE YOU DIG!
PENNSYLVANIA LAW REQUIRES
3 WORKING DAYS NOTICE FOR
CONSTRUCTION PHASE AND 10 WORKING
DAYS IN DESIGN STAGE - STOP CALL
PA 1 CALL, INC. 1-800-242-1776
POCS SERIAL NUMBER
20173111133 / 20173111134

LEGEND

SYMBOL	DESCRIPTION
	EXISTING WOOD LINE
	EXISTING TREE
	FIRE HYDRANT
W.V.	WATER VALVE
G.V.	GAS VALVE
	ENDWALL
	MANHOLE
	SIGNS
	EXISTING IRON PIN (UNLESS OTHERWISE NOTED)
	EXISTING GRADE
	PROPOSED GRADE
	EXISTING STORM SEWER
	PROPOSED STORM SEWER
	EXISTING SANITARY SEWER
	PROPOSED SANITARY SEWER
	EXISTING SANITARY SEWER LATERAL
	EXISTING WATER LINE
	PROPOSED WATER SERVICE
	EXISTING OVERHEAD ELECTRIC LINE
	EXISTING GAS LINE
	EXISTING TELEPHONE LINE
	EXISTING CABLE LINE
	SOIL LINE
GeC3	SOIL TYPE
	EROSION CONTROL BLANKET
	CONSTRUCTION ENTRANCE
	TREE PROTECTION
	LIMIT OF DISTURBANCE
	SILT FENCE
	LIMIT OF NPDES
	BASIN DRAINAGE AREA
123.5x x123.5	SPOT ELEVATION
	COMPOST FILTER SOCK
	INLET PROTECTION
	ROCK FILTER

Sequence of BMP installation and removal 102.4(b)(5)(vii):

1. Field-mark limits of disturbance areas.
2. Install stabilized rock Construction Entrance as shown on plan.
3. Install all tree protection as shown on plans.
4. Install silt fence down slope of the proposed construction areas. Proposed silt fence can be adjusted to field conditions during construction (only with the consent of an erosion control inspector or reviewer.) Install inlet protection to existing inlets accordingly.
5. Clean and grub area of site for construction of house location and driveway area.
6. Strip topsoil, stockpile. Immediately install silt fence downslope from stockpile as shown on plans.
7. Rough grade house location and driveway area as shown on plan.
8. Start construction on approved house locations.
9. Install storm tank seepage bed, install sanitary lateral. Tree protection fence is to be installed around storm tank seepage bed areas to prevent soil compaction during construction. Inlet protection devices are to be installed on all inlets immediately after installation. Perform maintenance as necessary; maintenance includes removing debris from inlet and outlet structures, monitoring sediment accumulation and cleaning out sediment and floatable debris using catch basin cleaning equipment.
10. Install utilities (electric, water, cable, etc.). Immediately stabilize.
11. Install driveway area base material.
12. Fine grade site. Install erosion control blankets on all slopes created that are steeper than 3:1.
13. Spread the required depth of 6" topsoil on the site as final grading is achieved. Soil amendment to be added at this time. Apply permanent seeding, fertilize and mulch immediately upon final grading.
14. Install landscaping.
15. Remove temporary erosion control measures and structures only when tributary areas have been stabilized to the satisfaction of the Appropriate party. An area shall be considered to have achieved final stabilization when it has a minimum uniform 70% perennial vegetative cover or other permanent non-vegetative cover with a density sufficient to resist accelerated surface erosion and subsurface characteristics sufficient to resist sliding and other movements. Sediment filters may only be removed if final stabilization is achieved.
16. Inspect all erosion control measures daily during the project's life, and in particular, after each runoff event.
17. Maintain all erosion and sediment control measures. Clean-out, repair or replace all measures as needed. Areas which continue to wash-out must be stabilized with jute netting, curlex blanket or rock lining.
18. Pave parking areas with finish wearing course.
19. Clean all erosion and sedimentation control facilities. All temporary erosion and sedimentation control measures and structures shall be removed only when the area has been completed and stabilized.

TABLE E.1 LIMITATIONS OF PENNSYLVANIA SOILS PERTAINING TO EARTHMOVING PROJECTS

SOIL NAME	CUTBANKS CAVE	CORROSIVE TO CONCRETE	CORROSIVE TO UNCOATED STEEL	DROUGHTY	RARELY FLOODED	FREQUENTLY FLOODED	DEPTH TO SATURATED ZONE WITHIN 2 FT.	DEPTH TO SOFT, HIGH WATER TABLE	HYDRIC / HYDRIC INCLUSIONS	LOW STRENGTH / LANDSLIDE PRONE	SLOW PERCOLATION	PIPING	POOR SOURCE OF TOPSOIL	FROST ACTION	SHRINK - SWELL	POTENTIAL SINKHOLE	PONDING	WETNESS
Califon	X	C/S					X			X	X			X				X
Cokesbury	X						X				X	X		X				
Gladstone	X	C		X					X		X			X	X			

Map Unit Symbol	Map Unit Name	Acres in AOI	Percent of AOI
CaB	Califon loam, 3 to 8 percent slopes	3.3	14.1%
CpA	Cokesbury silt loam, 0 to 3 percent slopes	12.1	51.1%
CpB	Cokesbury silt loam, 3 to 8 percent slopes	3.4	14.4%
GdB	Gladstone gravelly loam, 3 to 8 percent slopes	4.8	20.4%
Totals for Area of Interest		23.7	100.0%

PPC PLAN:

1. The site contractor must have a PPC plan available on the site at all times.

Geologic formations or soil conditions 102.4(b)(5)(xii)

There are no naturally occurring geologic formations or soil conditions that may have the potential to cause pollution during Earth Disturbance Activities.

Existing Cover:

Wooded and Meadow.

Staging of Earthmoving Activities:

The permittee or co permittee shall contact the Appropriate party at least seven days before construction is to begin to determine if a preconstruction conference is required. The permittee, co permittee, and others undertaking the earth disturbance activity must attend a preconstruction conference when requested by the Appropriate party. The permittee or co-permittee must bring a copy of their permit, a copy of the stamped plan, and all associated approvals/permits which must be available at the conference upon request. Also, at least 3 days before starting any earth disturbance activities, all contractors involved in those activities shall notify the Pennsylvania One Call System Incorporated at 1-800-242-1776 for buried utilities locations.

Upon the installation or stabilization of all perimeter sediment control BMPs and at least 3 days prior to proceeding with the bulk earth disturbance activities, the permittee or co-permittee shall provide notification to the department or authorized conservation district.

ALL EARTH DISTURBANCE ACTIVITIES SHALL PROCEED IN ACCORDANCE WITH THE FOLLOWING SEQUENCE. EACH STAGE SHALL BE COMPLETED BEFORE ANY FOLLOWING STAGE IS INITIATED. CLEARING AND GRUBBING SHALL BE LIMITED TO THOSE ARES DESCRIBED IN EACH STAGE.

PRELIMINARY/FINAL LAND DEVELOPMENT

40 0 40 80 120
GRAPHIC SCALE

NO.	DATE	DESCRIPTION	BY
1	8/21/19	REV. AS PER TWP. ENG. LETTER DATED 4/15/19	JAS

SETTLEMENT AGREEMENT
EROSION & SEDIMENTATION CONTROL PLAN – LOTS #1 & #2

PREPARED FOR
2291 SOUTH VALLEY ROAD
WILLISTOWN TOWNSHIP
CHESTER COUNTY
PENNSYLVANIA

Chambers Associates, Inc.
Consulting Engineers and Surveyors
2962 Skippack Pike P.O. Box 678
Worcester, PA 19490-0678
484-991-8187

SCALE	DATE	JOB	DRAWING NO.
1"=40'	2-11-19	713-005.03	SHEET 6 of 14
MANAGER: JPH		DRAWN BY: JAS	

L:\Phaedrus\2005 DOCUMENTS\005 SET 9-11-18.dwg, 6/11/2019 3:05:54 PM, Ralph Chambers, 1:1, 1=1, 0=0, 0=0

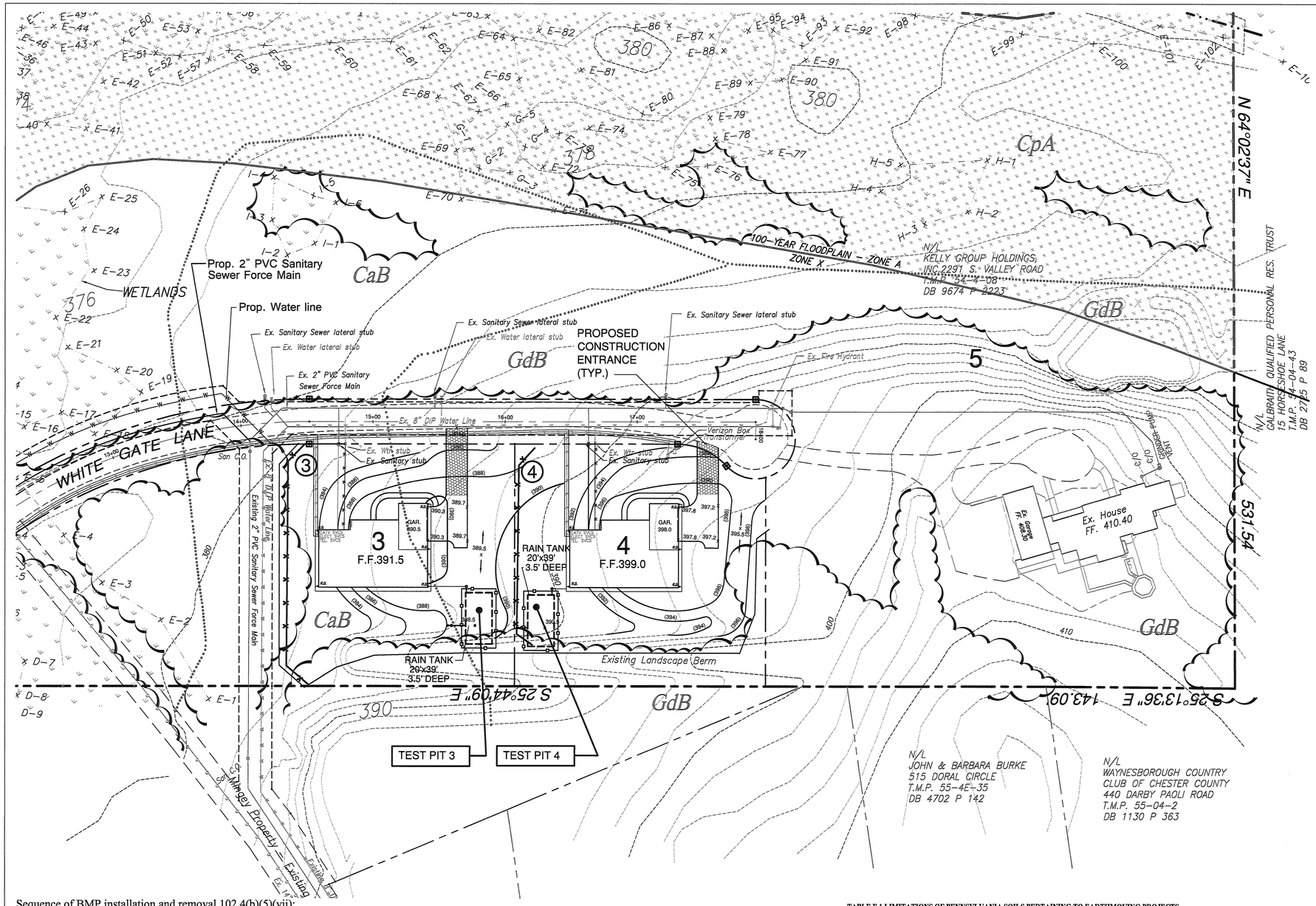

ACT 287, AS AMENDED, TABLE OF CONTACTS
WILLISTOWN TOWNSHIP 688 SUGARTOWN ROAD MALVERN, PA. 19355
EASTTOWN TOWNSHIP 566 BEAUMONT ROAD DEVON, PA. 19333
AQUA PENNSYLVANIA INC. 762 W. LANCASTER AVE. BRYN MAWR, PA. 19010
COMCAST CABLE 1004 CORNERSTONE BLVD. DOWNINGTOWN, PA. 19335
PECO ENERGY C/O USIC 450 S. HENDERSON RD. SUITE B KING OF PRUSSIA, PA. 19406
SUNCO PIPELINE LP 525 FRITZTOWN RD. SINKING SPRING, PA. 19608
VERIZON PENNSYLVANIA LLC. 1050 VIRGINIA DR. FORT WASHINGTON, PA. 19034

ALL LOCATIONS OF EXISTING UTILITIES SHOWN ON THE PLAN HAVE BEEN DEVELOPED FROM EXISTING UTILITY RECORDS AND/OR ABOVE-GROUND EXAMINATION OF THE SITE. COMPLETENESS OR ACCURACY OF LOCATION AND DEPTH OF UNDERGROUND UTILITIES OR STRUCTURES CANNOT BE GUARANTEED. CONTRACTOR MUST VERIFY LOCATION AND DEPTH OF ALL UNDERGROUND UTILITIES AND FACILITIES BEFORE START OF WORK, AS PER PENNSYLVANIA ACT 287. CONTACTED 11/07/2017 SERIAL # 20173111133 / 20173111134

CALL BEFORE YOU DIG!
PENNSYLVANIA LAW REQUIRES 3 WORKING DAYS NOTICE FOR CONSTRUCTION PHASE AND 10 WORKING DAYS IN DESIGN STAGE - STOP CALL
PA 1 STATEWIDE, INC. 1-800-242-1776
POCS SERIAL NUMBER
20173111133 / 20173111134

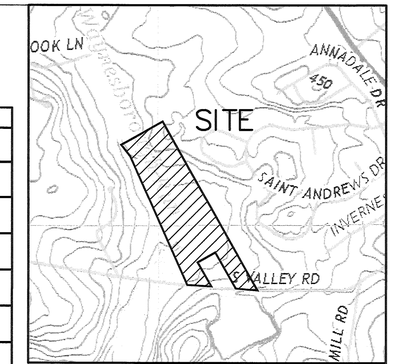

U.S.G.S. QUADRANGLE
VALLEY FORGE
1" = 800'

LEGEND

SYMBOL	DESCRIPTION
	EXISTING WOOD LINE
	EXISTING TREE
	FIRE HYDRANT
	WATER VALVE
	GAS VALVE
	ENDWALL
	MANHOLE
	SIGNS
	EXISTING IRON PIN (UNLESS OTHERWISE NOTED)
	EXISTING GRADE
	PROPOSED GRADE
	EXISTING STORM SEWER
	PROPOSED STORM SEWER
	EXISTING SANITARY SEWER
	PROPOSED SANITARY SEWER
	EXISTING SANITARY SEWER LATERAL
	EXISTING WATER LINE
	PROPOSED WATER SERVICE
	EXISTING OVERHEAD ELECTRIC LINE
	EXISTING GAS LINE
	EXISTING TELEPHONE LINE
	EXISTING CABLE LINE
	SOIL LINE
GeC3	SOIL TYPE
	EROSION CONTROL BLANKET
	CONSTRUCTION ENTRANCE
	TREE PROTECTION
	LIMIT OF DISTURBANCE
	SILT FENCE
	LIMIT OF NPDES
	BASIN DRAINAGE AREA
123.5x x123.5	SPOT ELEVATION
	COMPOST FILTER SOCK
	INLET PROTECTION
	ROCK FILTER

Sequence of BMP installation and removal 102.4(b)(5)(vii):

1. Field-mark limits of disturbance areas.
2. Install stabilized rock Construction Entrance as shown on plan.
3. Install all tree protection as shown on plans.
4. Install silt fence down slope of the proposed construction areas. Proposed silt fence can be adjusted to field conditions during construction (only with the consent of an erosion control inspector or reviewer.) Install inlet protection to existing inlets accordingly.
5. Clean and grub area of site for construction of house location and driveway area.
6. Strip topsoil, stockpile. Immediately install silt fence downslope from stockpile as shown on plans.
7. Rough grade house location and driveway area as shown on plan.
8. Start construction on approved house locations.
9. Install storm tank seepage bed, install sanitary lateral. Tree protection fence is to be installed around storm tank seepage bed areas to prevent soil compaction during construction. Inlet protection devices are to be installed on all inlets immediately after installation. Perform maintenance as necessary; maintenance includes removing debris from inlet and outlet structures, monitoring sediment accumulation and cleaning out sediment and floatable debris using catch basin cleaning equipment.
10. Install utilities (electric, water, cable, etc.). Immediately stabilize.
11. Install driveway area base material.
12. Fine grade site. Install erosion control blankets on all slopes created that are steeper than 3:1.
13. Spread the required depth of 6" topsoil on the site as final grading is achieved. Soil amendment to be added at this time. Apply permanent seeding, fertilize and mulch immediately upon final grading.
14. Install landscaping.
15. Remove temporary erosion control measures and structures only when tributary areas have been stabilized to the satisfaction of the appropriate party. An area shall be considered to have achieved final stabilization when it has a minimum uniform 70% perennial vegetative cover or other permanent non-vegetative cover with a density sufficient to resist accelerated surface erosion and subsurface characteristics sufficient to resist sliding and other movements. Sediment filters may only be removed if final stabilization is achieved.
16. Inspect all erosion control measures daily during the project's life, and in particular, after each runoff event.
17. Maintain all erosion and sediment control measures. Clean-out, repair or replace all measures as needed. Areas which continue to wash-out must be stabilized with jute netting, curlex blanket or rock lining.
18. Pave parking areas with finish wearing course.
19. Clean all erosion and sedimentation control facilities. All temporary erosion and sedimentation control measures and structures shall be removed only when the area has been completed and stabilized.

TABLE E.1 LIMITATIONS OF PENNSYLVANIA SOILS PERTAINING TO EARTHMOVING PROJECTS

SOIL NAME	CUTBANKS CAVE	CORROSIVE TO CONCRETE/STEEL	DROUGHTY	EASILY ERODIBLE	FLOODING	DEPTH TO SATURATED ZONE/SEASONAL HIGH WATER TABLE	HYDRIC / HYDRIC INCLUSIONS	LOW STRENGTH / LANDSLIDE PRONE	SLOW PERCOLATION	PIPING	POOR SOURCE OF TOPSOIL	FROST ACTION	SHRINK-SWELL	POTENTIAL SINKHOLE	PONDING	WETNESS
Califon	X	C/S				X		X	X			X				X
Cokesbury	X					X			X	X		X				
Gladstone	X	C		X			X		X			X	X			

Map Unit Symbol	Map Unit Name	Acres in AOI	Percent of AOI
CaB	Califon loam, 3 to 8 percent slopes	3.3	14.1%
CpA	Cokesbury silt loam, 0 to 3 percent slopes	12.1	51.1%
CpB	Cokesbury silt loam, 3 to 8 percent slopes	3.4	14.4%
GdB	Gladstone gravelly loam, 3 to 8 percent slopes	4.8	20.4%
Totals for Area of Interest		23.7	100.0%

PPC PLAN:

1. The site contractor must have a PPC plan available on the site at all times.

Geologic formations or soil conditions 102.4(b)(5)(xii)

There are no naturally occurring geologic formations or soil conditions that may have the potential to cause pollution during Earth Disturbance Activities.

Existing Cover:

Wooded and Meadow.

Staging of Earthmoving Activities:

The permittee or co permittee shall contact the Appropriate party at least seven days before construction is to begin to determine if a preconstruction conference is required. The permittee, co permittee, and others undertaking the earth disturbance activity must attend a preconstruction conference when requested by the Appropriate party. The permittee or co-permittee must bring a copy of their permit, a copy of the stamped plan, and all associated approvals/permits which must be available at the conference upon request. Also, at least 3 days before starting any earth disturbance activities, all contractors involved in those activities shall notify the Pennsylvania One Call System Incorporated at 1-800-242-1776 for buried utilities locations.

Upon the installation or stabilization of all perimeter sediment control BMPs and at least 3 days prior to proceeding with the bulk earth disturbance activities, the permittee or co-permittee shall provide notification to the department or authorized conservation district.

ALL EARTH DISTURBANCE ACTIVITIES SHALL PROCEED IN ACCORDANCE WITH THE FOLLOWING SEQUENCE. EACH STAGE SHALL BE COMPLETED BEFORE ANY FOLLOWING STAGE IS INITIATED. CLEARING AND GRUBBING SHALL BE LIMITED TO THOSE ARES DESCRIBED IN EACH STAGE.

PRELIMINARY/FINAL LAND DEVELOPMENT

40 0 40 80 120
GRAPHIC SCALE

NO.	DATE	DESCRIPTION	BY
1	8/21/19	REV. AS PER TWP. ENG. LETTER DATED 4/15/19	JAS

SETTLEMENT AGREEMENT
EROSION & SEDIMENTATION CONTROL PLAN - LOTS #3, #4 & #5

PREPARED FOR
2291 SOUTH VALLEY ROAD
WILLISTOWN TOWNSHIP
CHESTER COUNTY
PENNSYLVANIA

Chambers Associates, Inc.
Consulting Engineers and Surveyors
2962 Skippack Pike P.O. Box 678
Worcester, PA 19490-0678
484-991-8187

SCALE	DATE	JOB	DRAWING NO.
1"=40'	2-11-19	713-005.03	SHEET 7 of 14
MANAGER: JPH		DRAWN BY: JAS	

STANDARD E & S PLAN NOTES:

1. All earth disturbances, including clearing and grubbing as well as cuts and fills shall be done in accordance with the approved E & S plan. A copy of the approved drawings (stamped, signed and dated by the reviewing agency) must be available at the project site at all times. The reviewing agency shall be notified of any changes to the approved plan prior to implementation of those changes. The reviewing agency may require a written submittal of those changes for review and approval at its discretion.
2. At least 7 days prior to starting any earth disturbance activities, including clearing and grubbing, the owner and/or operator shall invite all contractors, the landowner, appropriate municipal officials, the E & S plan preparer, the PCSM plan preparer, the licensed professional responsible for oversight of critical stages of implementation of the PCSM plan, and a representative from the appropriate party to an on-site preconstruction meeting.
3. At least 3 days prior to starting any earth disturbance activities, or expanding into an area previously unmarked, the Pennsylvania One Call System, Inc. shall be notified at 1-800-242-1776 for the location of existing underground utilities.
4. All earth disturbance activities shall proceed in accordance with the sequence provided on the plan drawings. Deviation from that sequence must be approved in writing from the local conservation district or by the department prior to implementation.
5. Areas to be filled are to be cleared, grubbed, and stripped of topsoil to remove trees, vegetation, roots and other objectionable material.
6. Clearing, grubbing, and topsoil stripping shall be limited to those areas described in each stage of the construction sequence. General site clearing, grubbing and topsoil stripping may not commence in any stage or phase of the project until the E & S BMP's specified by the BMP sequence for that stage or phase have been installed and are functioning as described in this E & S plan.
7. At no time shall construction vehicles be allowed to enter areas outside the limit of disturbance boundaries shown on the plan maps. These areas must be clearly marked and fenced off before clearing and grubbing operations begin.
8. Topsoil required for the establishment of vegetation shall be stockpiled at the location(s) shown on the plan map(s) in the amount necessary to complete the finish grading of all exposed areas that are to be stabilized by vegetation. Each stockpile shall be protected in the manner shown on the plan drawings. Stockpile heights shall not exceed 35 feet. Stockpile slopes shall be 2H:1V or flatter.
9. Immediately upon discovering unforeseen circumstances posing the potential for accelerated erosion and/or sediment pollution, the operator shall implement appropriate best management practices to minimize the potential for erosion and sediment pollution and notify the appropriate party.
10. All building materials and wastes shall be removed from the site and recycled or disposed of in accordance with DEP's Solid Waste Management Regulations at 25 Pa. Code 260.1 et. seq., 271.1 and 287.1 et. seq. No building materials or wastes or unused building materials shall be burned, buried, dumped, or discharged at the site.
11. All off-site waste and borrow areas must have an E & S plan approved by the appropriate party fully implemented prior to being activated.
12. The contractor is responsible for ensuring that any material brought on site is clean fill. Form FP-001 must be retained by the property owner for any fill material affected by a spill or release of a regulated substance but qualifying as clean fill due to analytical testing.
13. All pumping of water from any work area shall be done according to the procedure described in this plan, over undisturbed vegetated areas.
14. Vehicles and equipment may neither enter directly nor exit directly from **building lot** onto **White Gate Lane.**
15. Until the site is stabilized, all erosion and sediment BMP's shall be maintained properly. Maintenance shall include inspections of all erosion and sediment BMP's after each runoff event and on a weekly basis. All preventative and remedial maintenance work, including clean out, repair, replacement, regrading, reseeding, remulching and renetting must be performed immediately. If the E & S BMP's fail to perform as expected, replacement BMP's, or modifications of those installed will be required.
16. A log showing dates that E & S BMP's were inspected as well as any deficiencies found and the date they were corrected shall be maintained on the site and be made available to regulatory agency officials at the time of inspection.
17. Sediment tracked onto any public roadway or sidewalk shall be returned to the construction site by the end of each work day and disposed in the manner described in this plan. In no case shall the sediment be washed, shoveled, or swept into any roadside ditch, storm sewer, or surface water.
18. All sediment removed from BMP's shall be disposed of in the manner described on the plan drawings.
19. Areas which are to be topsoiled shall be scarified to a minimum depth of 3 to 5 inches - 6 to 12 inches on compacted soils - prior to placement to topsoil. Areas to be vegetated shall have a minimum 4 inches of topsoil in place prior to seeding and mulching. Fill outslopes shall have a minimum of 2 inches of topsoil.
20. All fills shall be compacted as required to reduce erosion, slippage, settlement, subsidence or other related problems. Fill intended to support buildings, structures and conduits, etc. shall be compacted in accordance with local requirements or codes.
21. All earthen fills shall be placed in compacted layers not to exceed 9 inches in thickness.
22. Fill materials shall be free of frozen particles, brush, roots, sod, or other foreign or objectionable materials that would interfere with or prevent construction of satisfactory fills.
23. Frozen materials or soft, mucky, or highly compressible materials shall not be incorporated into fills.
24. Fill shall not be placed on saturated or frozen surfaces.
25. Seeps or springs encountered during construction shall be handled in accordance with the standard and specification for subsurface drain or other approved method.
26. All graded areas shall be permanently stabilized immediately upon reaching finished grade. Cut slopes in competent bedrock and rock fills need not be vegetated. Seeded areas within 50 feet of a surface water, or as otherwise shown on the plan drawings, shall be blanketed according to the standards of this plan.
27. Immediately after earth disturbance activities cease in any area or subarea of the project, the operator shall stabilize all disturbed areas. During non-germinating months, mulch or protective blanketing shall be applied as described in the plan. Areas not at finished grade, which will be reactivated within 1 year, may be stabilized in accordance with the temporary stabilization specifications. Those areas which will not be reactivated within 1 year shall be stabilized in accordance with the permanent stabilization specifications.
28. Permanent stabilization is defined as a minimum uniform, perennial 70% vegetative cover or other permanent non-vegetative cover with a density sufficient to resist accelerated erosion. Cut and fill slopes shall be capable of resisting failure sue to slumping, sliding or other movements.
29. E & S BMP's shall remain functional as such until all areas tributary to then are permanently stabilized or until they are replaced by another BMP approved by the local conservation district or the Department.
30. Upon completion of all earth disturbance activities and permanent stabilization of all disturbed areas, the owner and/or operator shall contact the local conservation district for an inspection prior to removal / conversion of the E & S BMP's.
31. After final site stabilization has been achieved, temporary erosion and sediment BMP's must be removed or converted to permanent post construction stormwater management BMP's. Areas disturbed during removal or conversion of the BMP's shall be stabilized immediately. In order to ensure rapid revegetation of disturbed areas, such removal / conversions are to be done only during the germinating season.
32. Upon completion of all earth disturbance activities and permanent stabilization of all disturbed areas, the owner and/or operator shall contact the local conservation district to schedule a final inspection.
33. Failure to correctly install E & S BMP's, failure to prevent sediment-laden runoff from leaving the construction site, or failure to take immediate corrective action to resolve failure of E & S BMP's may result in administrative, civil, and/or criminal penalties being instituted by the appropriate party as defined in Section 602 of the Pennsylvania Clean Streams Law. The Clean Streams Law provides for up to $10,000 per day in civil penalties, up to $10,000 in summary criminal penalties, and up to $25,000 in misdemeanor criminal penalties for each violation.

OPTIONAL E & S PLAN NOTES:

1. Concrete wash water shall be handled in the manner described on the plan drawings. In no case shall it be allowed to enter any surface waters or groundwater systems.
2. All channels shall be kept free of obstructions including but not limited to fill, rocks, leaves, woody debris, accumulated sediment, excess vegetation, and construction material/wastes.
3. Underground utilities cutting through any active channel shall be immediately backfilled and the channel restored to its original cross-section and protective lining. Any base flow within the channel shall be conveyed past the work area in the manner described in this plan until such restoration is complete.
4. Channels having riprap, Reno mattress, or gabion linings must be sufficiently over-excavated so that the design dimensions will be provided after placement of the protective lining.
5. Any damage that occurs in whole or in part as a result of basin or trap discharge shall be immediately repaired by the permittee in a permanent manner satisfactory to the municipality, local conservation district, and the owner of the damaged property.
6. Upon, request, the applicant or his contractor shall provide an as-built (record drawing) for any sediment basin or trap to the municipal inspector, local conservation district or the Department.
7. Erosion control blanketing shall be installed on all slopes 3H:1V or steeper within 50 feet of a surface water and on all other disturbed areas specified on the plan maps and/or detail sheets.
8. Fill material for embankments shall be free of roots, or other woody vegetation, organic material, large stones, and other objectionable materials. The embankment shall be compacted in maximum 8" layered lifts at 95 % density.

CRITICAL EROSION AREAS

The critical erosion areas on the site will be stabilized in accordance with the structural practices and monitored in accordance with the management strategies The site plan has been developed to minimize land disturbance where grading is necessary, and preserve existing vegetation. Adequate precautions will be taken to minimize erosion and trap sediment.

CONTROL MEASURES

Unless otherwise indicated, all vegetative and structural erosion and sediment control practices will be constructed and maintained according to the Minimum Standards of Willistown Township and the appropriate party.

STRUCTURAL PRACTICES

1. Silt Fence - A silt fence barrier is to be placed at the locations designated on the E&S Control Plan.
2. Compost Filter Sock - A compost filter sock barrier is to be placed at the locations designated on the E&S Control Plan.
3. Temporary Construction Entrance - A temporary construction entrance shall be installed at the location designated on the E&S Plan.
4. Storm Sewer Drain Inlet Protection - All storm sewer drain inlets shall be protected during construction, as specified on the E&S Plan.
5. Driveways - All roads on the site shall be stabilized with gravel, or a base course immediately after grading. Construction traffic shall be limited to the driveways.

VEGETATIVE PRACTICES

1. Topsoil Stockpile - Topsoil shall be stripped from areas to be graded and stockpiled for later use.
2. Temporary Seeding - The topsoil stockpile and detention basin and all other areas to be regraded during the initial phase of construction, especially those not scheduled for immediate construction, shall be seeded with a fast-germinating, temporary vegetation mixture, immediately upon grading. Selection of the appropriate seed mixture would depend on the time of year it is applied.

PERMANENT STABILIZATION

All areas disturbed by construction will be stabilized with permanent seeding, especially following finished grade. Seeding shall be done in accordance with the appropriate party. Permanently seeded areas shall be protected during establishment with a straw mulch. Stabilization is defined as 70% perennial growth.

MANAGEMENT STRATEGIES

1. Construction should be sequenced so that the grading operations can begin and end as quickly as possible.
2. Sediment trapping measures shall be installed as a first step in grading, and shall be seeded and mulched immediately following installation.
3. Temporary seeding or other stabilization shall follow immediately after grading.
4. Areas which are not to be disturbed during construction shall be clearly marked by flags or signs.
5. The Job Superintendent shall be responsible for the installation and maintenance of all erosion and sediment control practices.
6. The permitee must develop and have approved by the appropriate party, separate erosion and sedimentation control plan for each spoil, borrow, or other work area not detailed in the permitted plan, whether located within or outside the construction limits.

MAINTENANCE PROGRAM 102.4(b)(5)(x):

Until the site is stabilized, all erosion and sediment BMP's shall be maintained properly. Maintenance shall include inspections of all erosion and sediment BMP's after each runoff event and on a weekly basis. All preventative and remedial maintenance work, including clean out, repair, replacement, regrading, reseeding, remulching and renetting must be performed immediately.The following controls will be checked in particular:

1. The inlet protection devices will be checked weekly and after each runoff event for sediment clean out.
2. All seeded areas will be checked weekly and after each runoff event to see that a good stand in maintained. Areas should be fertilized and reseeded as necessary. Areas which continue to wash will be sodded.
3. The silt fence barrier will be checked weekly and after each runoff event for undermining determination of the fabric.
4. The construction entrance driveway shall be maintained in a condition which will prevent tracking of flowing of sediment onto public right of way. This may require periodic top dressing with additional stone as conditions demand and repair and/or clean out of any measures used to trap sediments spilled, dropped, washed or tracked onto public right of way must be removed immediately.

A log showing dates that E & S BMP's were inspected as well as any deficiencies found and the date they were corrected shall be maintained on the site and be made available to regulatory agency officials at the time of inspection.

STANDARD BMP NOTES:

Vehicles and equipment may neither enter directly to nor exit directly from building area onto White Gate Lane.

Stockpile heights must not exceed 35 feet. Stockpile slopes must be 2: 1 or flatter.

The operator shall assure that the approved erosion and sediment control plan is properly and completely implemented.

Until the site achieves final stabilization, the Permittee and Co-permittee shall assure that the best management practices are implemented, operated, and maintained properly and completely. Maintenance shall include inspections of all best management practice facilities and maintain and make available to the appropriate party complete, written inspection logs of all those inspections. All maintenance work, including cleaning, repair, replacement, regarding, reseeding, and restabilization shall be performed immediately.

Immediately upon discovering unforeseen circumstances posing the potential for accelerated erosion and/or sediment pollution, the operator shall implement appropriate best management practices to eliminate potential for accelerated erosion and/or sediment pollution.

Before initiating any revisions to the approved erosion and sediment control plan or revisions to other plans which may affect the effectiveness of the approved E&S control plan, the operator must receive approval of the revisions from the appropriate party.

The operator shall assure that an erosion and sediment control plan has been prepared, approved by the appropriate party, and is being implemented and maintained for all soil and/or rock spoil and borrow areas, regardless of their locations.

All pumping of sediment laden water shall be through a sediment control BMP, such as a pumped water filter bag discharging over non-disturbed areas.

The contractor is advised to become thoroughly familiar with the provisions of the Appendix 64, Erosion Control Rules and Regulations, Title 25, Part 1, Department of Environmental Protection, Subpart C, Protection of Natural Resources, Article III, Water Resources, Chapter 102, Erosion Control.

A copy of the approved erosion and sediment control plan must be available at the project site at all times.

Only limited disturbance will be permitted to provide access to White Gate Lane for grading and acquiring borrow to construct those BMP's. No borrows needed.

Erosion and sediment BMP's must be constructed, stabilized, and functional before site disturbance begins within the tributary areas of those BMP's.

After final site stabilization has been achieved, temporary erosion and sediment BMP controls must be removed. Areas disturbed during removal of the BMP's must be stabilized immediately.

The permittee or co permittee shall contact the appropriate party at least seven days before construction is to begin to determine if a preconstruction conference is required. The permittee, co permittee, and others undertaking the earth disturbance activity must attend a preconstruction conference when requested by the department or authorized conservation district. The permittee or co-permittee must bring a copy of their permit, a copy of the stamped plan from the appropriate party, and all associated approvals/permits which must be available at the conference upon request. Also, at least 3 days before starting any earth disturbance activities, all contactors involved in those activities shall notify the Pennsylvania One Call System Incorporated at 1-800-242-1776 for buried utilities locations.

Upon the installation or stabilization of all perimeter sediment control BMPs and at least 3 days prior to proceeding with the bulk earth disturbance activities, the permittee or co-permittee shall provide notification to the appropriate party.

ALL EARTH DISTURBANCE ACTIVITIES SHALL PROCEDE IN ACCORDANCE WITH THE FOLLOWING SEQUENCE. EACH STAGE SHALL BE COMPLETED BEFORE ANY FOLLOWING STAGE IS INITIATED. CLEARING AND GRUBBING SHALL BE LIMITED TO THOSE ARES DESCRIBED IN EACH STAGE.

Immediately after earth disturbance activities cease, the operator shall stabilize any areas disturbed by the activities. During non-germinating periods, mulch must be applied at the specified rates. Disturbed areas which are not at finished grade and which will be redisturbed within one year must be stabilized in accordance with the temporary vegetative stabilization specifications. Disturbed areas which are at finished grade or which will not be redisturbed within one year must be stabilized in accordance with the permanent vegetative stabilization specifications.

An area shall be considered to have achieved final stabilization when it has a minimum uniform 70% perennial vegetative cover or other permanent non-vegetative cover with a density sufficient to resist accelerated surface erosion and subsurface characteristics sufficient to resist sliding and other movements.

Permittees and co permittees are responsible for ensuring that a licensed professional have oversight responsibilities for the design and proper installation of BMPs identified in the PCSM Plan prior to the submission of the NOT for this permit. The licensed professional shall certify that the BMPs identified in the plan have been installed in accordance with the approved plan. The installation schedule of PCSM BMPs and maintenance requirements contained within the approved PCSM Plan must be followed; and failure to comply with the installation schedule is a violation of this permit, the Clean Streams Law, and the Clean Water Act.

Other BMP's

Sediment must be removed from storm water inlet protection after each runoff event.

Temporary Stabilization and Permanent Stabilization

Hay or straw mulch must be applied at 3.0 tons per acre.

Mulch with mulch control netting or erosion control blankets must be installed on all slopes 3:1 or steeper.

Straw mulch shall be applied in long strands, not chopped or finely broken.

Until the site is stabilized, all erosion and sediment BMP's must be maintained properly. Maintenance must include inspections of all erosion and sediment control BMP's after each runoff event and on a weekly basis. All preventative and remedial maintenance work, including clean out, repair, replacement, regarding, reseeding, remulching, and renetting, must be done immediately. If erosion and sediment control BMP's fail to perform as expected, replacement BMP's, or modifications to those installed will be required.

Upon completion or temporary cessation of the earth disturbance activity the project site shall be immediately stabilized in accordance with the recommendations contained in the Erosion and Sediment Pollution Control Program Manual (E&S Manual), Commonwealth of Pennsylvania, Department of Environmental Protection No. 363-2134-008, March 2012, as amended and updated. Erosion and sediment control BMPs shall be implemented and maintained until permanent stabilization is completed and PCSM BMPs are operational.

RECYCLING OR DISPOSAL OF MATERIALS 102.4(b)(5)(xi):

Sediment removed from BMP's shall be disposed of in landscape areas outside of steep slopes, wetlands, floodplains or drainage swales and immediately stabilized, or placed in topsoil stockpiles.

The operator shall remove from this site, recycle, or dispose of all building materials and wastes in accordance with the DEP's Solid Waste Management Regulations at 25 Pa. Code 260.1 et seq., 271.1 et seq. The contractor shall not illegally bury, dump, or discharge any building material or wastes at this site.

An E&S Plan shall be submitted to the appropriate party and implemented for all spoil and borrow areas, regardless of their location.

CHAPTER 93 CLASSIFICATION:

The existing on-site and off-site runoffs flow to Waynesborough Run.

Utility Line Trench Excavation Notes

1. Limit advanced clearing and grubbing operations to a distance equal to two times the length of pipe installation that can be completed in one day.
2. Work crews and equipment for trenching, placement of pipe, plug construction and backfilling will be self-contained and separate from clearing and grubbing and site restoration and stabilization operations.
3. All soil excavated from the trench will be placed on the uphill side of the trench.
4. Limit daily trench excavation to the length of pipe placement, plug installation and backfilling that can be completed the same day.
5. Water which accumulates in the open trench will be completely removed by pumping before pipe placement and / or backfilling begins. Water removed from the trench shall be pumped through a filtration device.
6. On the day following pipe placement and trench backfilling, the disturbed area will be graded to final contours and immediately stabilized.
7. Soils excavated from existing surface layer should be stockpiled separately and returned as final surface layer following trench backfilling.

MONITORING, INSPECTION, AND REPORTING REQUIREMENTS:

Visual Inspections

The permittee and co permittee(s) must ensure that visual site inspections are conducted weekly, and within 24 hours after each measurable rainfall event throughout the duration of construction and until the receipt and acknowledgement of the NOT by the appropriate party. The visual site inspections and reports shall be completed in a format provided by the department, and conducted by qualified personnel, trained and experienced in erosion and sediment control, to ascertain that E&S BMPs and PCSM BMPs are properly constructed and maintained to effectively minimize pollution to the waters of this commonwealth. A written report of each inspection shall be kept and include at a minimum:
(1) a summary of site conditions, E&S BMP and PCSM BMP, implementation and maintenance and compliance actions; and
(2) the date, time, name and signature of the person conducting the inspection.

Noncompliance Reporting

Where E&S, PCSM or PPC BMPs are found to be inoperative or ineffective during an inspection, or any other time, the permittee and co permittee(s) shall, within 24 hours, contact the department or authorized conservation district, by phone or personal contact, followed by the submission of a written report within 5 days of the initial contact. Noncompliance reports shall include the following information:
(1) any condition on the project site which may endanger public health, safety, or the environment, or involve incidents which cause or threaten pollution;
(2) the period of noncompliance, including exact dates and times and/or anticipated time when the activity will return to compliance;
(3) steps being taken to reduce, eliminate, and prevent recurrence of the noncompliance; and
(4) the date or schedule of dates, and identifying remedies for correcting noncompliance conditions.

Reduction, Loss, or Failure of the BMPs

Upon reduction, loss, or failure of the BMPs, the permittee and co permittee shall take immediate action to restore the BMPs or provide an alternative method of treatment. Such restored BMPs or alternative treatment shall be at least as effective as the original BMPs.

Termination of Coverage

NOT: Upon permanent stabilization of earth disturbance activities associated with construction activity that are authorized by this permit and when BMPs identified in the PCSM Plan have been properly installed, the permittee and/or co permittee of the facility must submit a NOT form that is signed in accordance with Part B, Section 1.c, Signatory Requirements, of this permit. All letters certifying discharge termination are to be sent to the department or authorized conservation district. The NOT must contain the following information: facility name, address, and location, operator name and address, permit number, identification and proof of acknowledgment from the person(s) who will be responsible for operation and maintenance of the PCSM BMPs in accordance with the approved PCSM Plan, and the reason for permit termination. Until the permittee has received written acknowledgement of the NOT, the permittee will remain responsible for operating and maintaining all E&S BMPs and PCSM BMPs on the project site and will be responsible for violations occurring on the project site.

Completion Certificate and Final Plans

Within 30 days after the completion of earth disturbance activities authorized by this permit, including the permanent stabilization of the site and proper installation of PCSM BMPs in accordance with the approved PCSM Plan, or upon submission of the NOT if sooner, the permittee shall file with the appropriate party a statement signed by a licensed professional and by the permittee certifying that work has been performed in accordance with the terms and conditions of this permit and the approved E&S and PCSM Plans.

RESPONSIBILITIES FOR FILL MATERIALS:

If the site will need to import or export material from the site, the responsibility for performing environmental due diligence and determination of clean fill will rest with *(Responsible Party).*

Clean Fill is defined as: Uncontaminated, non-water soluble, non-decomposable, inert, solid material. The term includes soil, rock, stone, dredged material, used asphalt, and brick, block or concrete from construction and demolition activities that is separate from other waste and is recognizable as such. The term does not include materials placed in or on the waters of the Commonwealth unless otherwise authorized. (The term "used asphalt" does not include milled asphalt or asphalt that has been processed for re-use).
Clean Fill affected by a spill or release of a regulated substance: Fill materials affected by a spill or release of a regulated substance still qualifies as clean fill provided the testing reveals that the fill material contains concentrations of regulated substances that are below the residential limits in Tables FP-1a and FP-1b found in the Department's policy *"Management of Fill"*.
Any person placing clean fill that has been affected by a spill or release of a regulated substance must use form FP-001 to certify the origin of the fill material and the results of the analytical testing to qualify the material as clean fill. Form FP-001 must be retained by the owner of the property receiving the fill. A copy of Form FP-001 can be found at the end of these instructions.
Environmental due diligence: The applicant must perform environmental due diligence to determine if the fill materials associated with the project qualify as clean fill. Environmental due diligence is defined as: *Investigative techniques, including, but not limited to, visual property inspections, electronic data base searches, review of property ownership, review of property use history, Sanborn maps, environmental questionnaires, transaction screens, analytical testing, environmental assessments or audits.* **Analytical testing is not a required part of due diligence unless visual inspection and/or review of the past land use of the property indicates that the fill may have been subjected to a spill or release of regulated substance.** If the fill may have been affected by a spill or release of a regulated substance, it must be tested to determine if it qualifies as clean fill. Testing should be performed in accordance with Appendix A of the Department's policy *"Management of Fill"*.

Fill material that does not qualify as clean fill is regulated fill. Regulated fill is waste and must be managed in accordance with the Department's municipal or residual waste regulations based on 25 Pa. Code Chapters 287 Residual Waste Management or 271 Municipal Waste Management, whichever is applicable. These regulations are available on-line at www.pacode.com .

Sequence of BMP installation and removal 102.4(b)(5)(vii):

1. Field-mark limits of disturbance areas.
2. Install stabilized rock Construction Entrance as shown on plan.
3. Install all tree protection as shown on plans.
4. Install silt fence down slope of the proposed construction areas. Proposed silt fence can be adjusted to field conditions during construction (only with the consent of an erosion control inspector or reviewer.) Install inlet protection to existing inlets accordingly.
5. Clean and grub area of site for construction of house location and driveway area.
6. Strip topsoil, stockpile. Immediately install silt fence downslope from stockpile as shown on plans.
7. Rough grade house location and driveway area as shown on plan.
8. Start construction on approved house locations.
9. Install storm tank seepage bed, install sanitary lateral. Tree protection fence is to be installed around storm tank seepage bed areas to prevent soil compaction during construction. Inlet protection devices are to be installed on all inlets immediately after installation. Perform maintenance as necessary; maintenance includes removing debris from inlet and outlet structures, monitoring sediment accumulation and cleaning out sediment and floatable debris using catch basin cleaning equipment.
10. Install utilities (electric, water, cable, etc.). Immediately stabilize.
11. Install driveway area base material.
12. Fine grade site. Install erosion control blankets on all slopes created that are steeper than 3:1.
13. Spread the required depth of 6" topsoil on the site as final grading is achieved. Soil amendment to be added at this time. Apply permanent seeding, fertilize and mulch immediately upon final grading.
14. Install landscaping.
15. Remove temporary erosion control measures and structures only when tributary areas have been stabilized to the satisfaction of the appropriate party. An area shall be considered to have achieved final stabilization when it has a minimum uniform 70% perennial vegetative cover or other permanent non-vegetative cover with a density sufficient to resist accelerated surface erosion and subsurface characteristics sufficient to resist sliding and other movements. Sediment filters may only be removed if final stabilization is achieved.
16. Inspect all erosion control measures daily during the project's life, and in particular, after each runoff event.
17. Maintain all erosion and sediment control measures. Clean-out, repair or replace all measures as needed. Areas which continue to wash-out must be stabilized with jute netting, curlex blanket or rock lining.
18. Pave parking areas with finish wearing course.
19. Clean all erosion and sedimentation control facilities. All temporary erosion and sedimentation control measures and structures shall be removed only when the area has been completed and stabilized.

PLANNING & DESIGN 102.4(b)(4):

To minimize extent and duration of earth disturbance, Clearing, grubbing, and topsoil stripping shall be limited to those areas described in each stage of the construction sequence. General site clearing, grubbing and topsoil stripping may not commence in any stage or phase of the project until the E & S BMP's specified by the BMP sequence for that stage or phase have been installed and are functioning as described in this E & S plan.
To maximize protection of existing drainage features and vegetation, temporary tree protection fence will be installed along existing trees to be saved.
To minimize soil compaction, at no time shall construction vehicles be allowed to enter areas outside the limit of disturbance boundaries shown on the plan maps. These areas must be clearly marked and fenced off before clearing and grubbing operations begin.
To minimize generation of increased stormwater runoff, immediately after earth disturbance activities cease in any area or subarea of the project, the operator shall stabilize all disturbed areas. During non-germinating months, mulch or protective blanketing shall be applied as described in the plan. Areas not at finished grade, which will be reactivated within 1 year, may be stabilized in accordance with the temporary stabilization specifications. Those areas which will not be reactivated within 1 year shall be stabilized in accordance with the permanent stabilization specifications. In addition to stabilizing disturbed areas proposed Deciduous and Evergreen trees will be planted.

SOIL RESOLUTIONS 102.4(b)(5)(ii):

1. **Low PH:** for soils with PH values lower than 5.5 adjust PH by applying lime at rates determined by soils testing in combination with selecting and planting vegetative species tolerant of acidic conditions.

2. **Low Fertility:** incorporate additional soil nutrients at rates determined by soil testing in combination with selecting and planting vegetative species tolerant of low fertility conditions.

3. **Dry or Droughty Soils:** select vegetative species tolerant of dry conditions.

4. **High Water Table or Wet/Hydric Soils prone to flooding:** select vegetative species tolerant of wet conditions. If buildings are located in said soils provide sump pumps with back flow prevention devices in basements. If high water is encountered during construction, contractor shall utilize pumped water filtration methods (ie. Dirt Bag). For basin construction in areas of wet soils, preferably relocate stormwater and sediment basins and facilities in soils more conductive to such facilities. If facilities can not be relocated, provide pumped water sediment removal facilities for basin construction, limit reservoir depths, and limit clean out elevations.

5. **Erodible Soils Types:** for soils with erodibility values higher than 0.36, contractor should incorporate some or all of the following stabilization techniques. In proposed channels, provide temporary linings until grass is established, provide permanent grass reinforced linings through the installation of sod or select permanent linings other than grasses. Decrease channel grades and increase channel widths to help reduce erosion.

6. **Soils prone to Sinkholes and Solution Channels:** locate stormwater retention facilities, sediment traps and basins, on other soil types. If facilities must be located in sinkhole susceptible soils, line reservoir area with plastic, clay, bentonite, or other acceptable linings. Limit standing water depths and retention times.

7. **Soils prone to Instability piping and seeping:** if stormwater or sediment basin/traps can not be relocated to other soil types, limit embankment slope steepness, provide clay embankment cores and import other soils for construction of embankment facilities as necessary.

8. **Soils Unsuitable for Winter grading, prone to frost action, or difficult to compact:** grading during periods prone to frost should be limited. Construction of structural embankment should be performed. During the period of May to October if such facilities cannot be relocated to an area with more conductive soils.

9. **Unsuitable Topsoil:** if suitable topsoil is not found on-site, topsoil shall be imported.

Temporary and Permanent Vegetative Stabilization Specifications

Temporary:

*SPECIES:	ANNUAL RYEGRASS
% PURE LIVE SEED:	81 %
APPLICATION RATE:	48 LB. / ACRE
FERTILIZER TYPE:	(10-10-10)
FERTILIZER APPL. RATE:	500 LB. / ACRE
LIMING RATE:	1 T. / ACRE
MULCH TYPE:	STRAW
MULCHING RATE:	3 T. / ACRE

Permanent:

TOPSOIL PLACEMENT DEPTH:	4-8 IN.	4-8 IN.
*SPECIES:	TALL FESCUE	REDTOP
% PURE LIVE SEED:	76 %	74 %
APPLICATION RATE:	60 LB. / ACRE	3 LB. / ACRE
FERTILIZER TYPE:	(10-10-20)	(10-10-20)
FERTILIZER APPL. RATE:	1,000 LB. / ACRE	1,000 LB. / ACRE
LIMING RATE:	6 T. / ACRE	6 T. / ACRE
MULCH TYPE:	STRAW	STRAW
MULCHING RATE:	3 T. / ACRE	3 T. / ACRE
ANCHOR MATERIAL:	TRACTOR-DRAWN IMPLEMENT	TRACTOR-DRAWN IMPLEMENT
ANCHORING METHOD:	CRIMPING	CRIMPING
RATE OF ANCHOR MATERIAL APPL:	N/A	LB. / ACRE
SEEDING SEASON DATES:	MARCH, APRIL, EARLY MAY / BEFORE AUGUST 15	MARCH, APRIL, EARLY MAY / BEFORE AUGUST 15

Permanent - Steep Slope:

TOPSOIL PLACEMENT DEPTH:	4-8 IN.	4-8 IN.
*SPECIES:	TALL FESCUE	REDTOP
% PURE LIVE SEED:	76 %	74 %
APPLICATION RATE:	60 LB. / ACRE	3 LB. / ACRE
FERTILIZER TYPE:	(10-10-20)	(10-10-20)
FERTILIZER APPL. RATE:	1,000 LB. / ACRE	1,000 LB. / ACRE
LIMING RATE:	6 T. / ACRE	6 T. / ACRE
MULCH TYPE:	STRAW	STRAW
MULCHING RATE:	3 T. / ACRE	3 T. / ACRE
ANCHOR MATERIAL:	TRACTOR-DRAWN IMPLEMENT	TRACTOR-DRAWN IMPLEMENT
ANCHORING METHOD:	CRIMPING	CRIMPING
RATE OF ANCHOR MATERIAL APPL:	N/A	LB. / ACRE
SEEDING SEASON DATES:	MARCH, APRIL, EARLY MAY / BEFORE AUGUST 15	MARCH, APRIL, EARLY MAY / BEFORE AUGUST 15

* If more than one species is used, indicate application rate for each species.

1. Temporary Seeding - typically lime and fertilizer is not required for topsoil stockpiles.
2. Permanent Seeding - lime and fertilizer application as above or as per soil test; may not be required in agricultural fields.
3. **A compost blanket which meets the standards of Chapter 11 of Erosion and Sediiment Pollution Control Program Manual may be substituted for the soil amendments shown above.**

SEQUENCE OF EARTHMOVING

Anticipated Start Date: Summer 2019
Anticipated Completion Date: Summer 2020
Developer and/or Contractor shall notify the appropriate party at least 72 hours prior to the commencement of earthmoving activities, and setup a pre-construction meeting with representatives of, but not limited to, the appropriate party, Contractor and Developer.

This project will be developed in one phase.

TABLE E.1 LIMITATIONS OF PENNSYLVANIA SOILS PERTAINING TO EARTHMOVING PROJECTS

SOIL NAME	CUTBANKS CAVE	CORROSIVE TO CONCRETE \ STEEL	DROUGHTY	EASILY ERODIBLE	FLOODING	DEPTH TO SATURATED ZONE/SEASONAL HIGH WATER TABLE	HYDRIC / HYDRIC INCLUSIONS	LOW STRENGTH / LANDSLIDE PRONE	SLOW PERCOLATION	PIPING	POOR SOURCE OF TOPSOIL	FROST ACTION	SHRINK - SWELL	POTENTIAL SINKHOLE	PONDING	WETNESS
Califon	X	C/S				X		X	X			X				X
Cokesbury	X					X			X	X		X				
Gladstone	X	C		X			X		X			X	X			

Map Unit Symbol	Map Unit Name	Acres in AOI	Percent of AOI
CaB	Califon loam, 3 to 8 percent slopes	3.3	14.1%
CpA	Cokesbury silt loam, 0 to 3 percent slopes	12.1	51.1%
CpB	Cokesbury silt loam, 3 to 8 percent slopes	3.4	14.4%
GdB	Gladstone gravelly loam, 3 to 8 percent slopes	4.8	20.4%
Totals for Area of Interest		23.7	100.0%

PRELIMINARY/FINAL LAND DEVELOPMENT

NO.	DATE	DESCRIPTION	BY
1	8/21/19	REV. AS PER TWP. ENG. LETTER DATED 4/15/19	JAS

SETTLEMENT AGREEMENT
EROSION & SEDIMENTATION CONTROL NOTES
PREPARED FOR
2291 SOUTH VALLEY ROAD
WILLISTOWN TOWNSHIP
CHESTER COUNTY
PENNSYLVANIA

Chambers Associates, Inc.
Consulting Engineers and Surveyors
2962 Skippack Pike P.O. Box 678
Worcester, PA 19490-0678
484-991-8187

SCALE	DATE	JOB	DRAWING NO.
N.T.S.	2-11-19	713-005.03	SHEET 8 of 14
MANAGER: JPH		DRAWN BY: JAS	

Ricoh MP CW 2201 PCL6

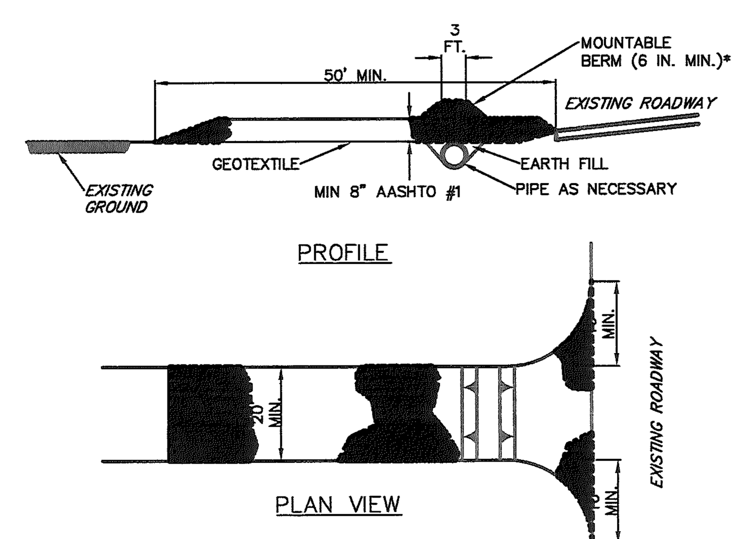

* MOUNTABLE BERM USED TO PROVIDE PROPER COVER FOR PIPE

NOTES:

REMOVE TOPSOIL PRIOR TO INSTALLATION OF ROCK CONSTRUCTION ENTRANCE. EXTEND ROCK OVER FULL WIDTH OF ENTRANCE.

RUNOFF SHALL BE DIVERTED FROM ROADWAY TO A SUITABLE SEDIMENT REMOVAL BMP PRIOR TO ENTERING ROCK CONSTRUCTION ENTRANCE.

MOUNTABLE BERM SHALL BE INSTALLED WHEREVER OPTIONAL CULVERT PIPE IS USED AND PROPER PIPE COVER AS SPECIFIED BY MANUFACTURER IS NOT OTHERWISE PROVIDED. PIPE SHALL BE SIZED APPROPRIATELY FOR SIZE OF DITCH BEING CROSSED.

MAINTENANCE: ROCK CONSTRUCTION ENTRANCE THICKNESS SHALL BE CONSTANTLY MAINTAINED TO THE SPECIFIED DIMENSIONS BY ADDING ROCK. A STOCKPILE SHALL BE MAINTAINED ON SITE FOR THIS PURPOSE. ALL SEDIMENT DEPOSITED ON PAVED ROADWAYS SHALL BE REMOVED AND RETURNED TO THE CONSTRUCTION SITE IMMEDIATELY. IF EXCESSIVE AMOUNTS OF SEDIMENT ARE BEING DEPOSITED ON ROADWAY, EXTEND LENGTH OF ROCK CONSTRUCTION ENTRANCE BY 50 FOOT INCREMENTS UNTIL CONDITION IS ALLEVIATED OR INSTALL WASH RACK. WASHING THE ROADWAY OR SWEEPING THE DEPOSITS INTO ROADWAY DITCHES, SEWERS, CULVERTS, OR OTHER DRAINAGE COURSES IS NOT ACCEPTABLE.

STANDARD CONSTRUCTION DETAIL #3-1
ROCK CONSTRUCTION ENTRANCE

NOT TO SCALE

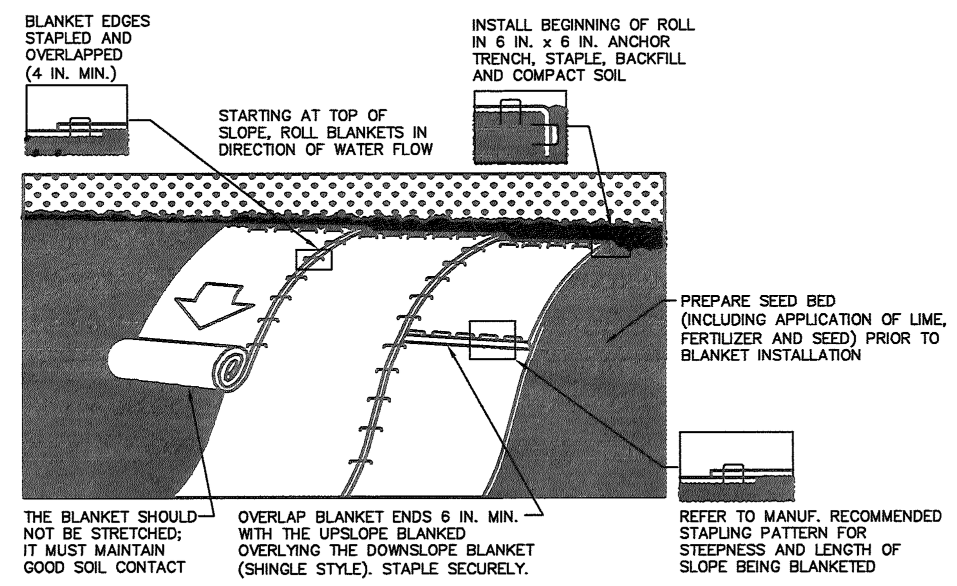

NOTES:

SEED AND SOIL AMENDMENTS SHALL BE APPLIED ACCORDING TO THE RATES IN THE PLAN DRAWINGS PRIOR TO INSTALLING THE BLANKET.

PROVIDE ANCHOR TRENCH AT TOE OF SLOPE IN SIMILAR FASHION AS AT TOP OF SLOPE.

SLOPE SURFACE SHALL BE FREE OF ROCKS, CLODS, STICKS, AND GRASS.

BLANKET SHALL HAVE GOOD CONTINUOUS CONTACT WITH UNDERLYING SOIL THROUGHOUT ENTIRE LENGTH. LAY BLANKET LOOSELY AND STAKE OR STAPLE TO MAINTAIN DIRECT CONTACT WITH SOIL. DO NOT STRETCH BLANKET.

THE BLANKET SHALL BE STAPLED IN ACCORDANCE WITH THE MANUFACTURER'S RECOMMENDATIONS.

BLANKETED AREAS SHALL BE INSPECTED WEEKLY AND AFTER EACH RUNOFF EVENT UNTIL PERENNIAL VEGETATION IS ESTABLISHED TO A MINIMUM UNIFORM 70% COVERAGE THROUGHOUT THE BLANKETED AREA. DAMAGED OR DISPLACED BLANKETS SHALL BE RESTORED OR REPLACED WITHIN 4 CALENDAR DAYS.

STANDARD CONSTRUCTION DETAIL #11-1
EROSION CONTROL BLANKET INSTALLATION

NOT TO SCALE

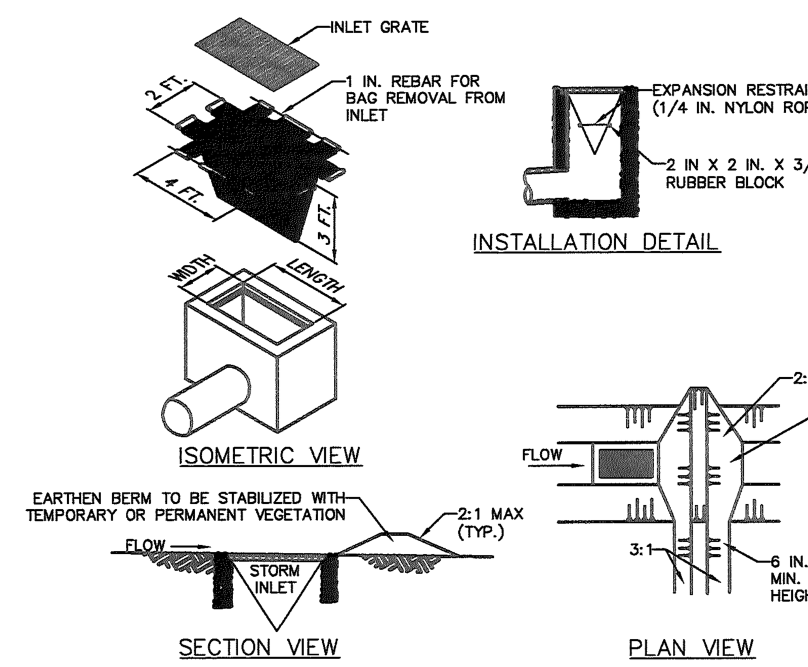

NOTES:

MAXIMUM DRAINAGE AREA = 1/2 ACRE.

INLET PROTECTION SHALL NOT BE REQUIRED FOR INLET TRIBUTARY TO SEDIMENT BASIN OR TRAP. BERMS SHALL BE REQUIRED FOR ALL INSTALLATIONS.

ROLLED EARTHEN BERM IN ROADWAY SHALL BE MAINTAINED UNTIL ROADWAY IS STONED. ROAD SUBBASE BERM ON ROADWAY SHALL BE MAINTAINED UNTIL ROADWAY IS PAVED. EARTHEN BERM IN CHANNEL SHALL BE MAINTAINED UNTIL PERMANENT STABILIZATION IS COMPLETED OR REMAIN PERMANENTLY.

AT A MINIMUM, THE FABRIC SHALL HAVE A MINIMUM GRAB TENSILE STRENGTH OF 120 LBS., A MINIMUM BURST STRENGTH OF 200 PSI, AND A MINIMUM TRAPEZOIDAL TEAR STRENGTH OF 50 LBS. FILTER BAGS SHALL BE CAPABLE OF TRAPPING ALL PARTICLES NOT PASSING A NO. 40 SIEVE.

INLET FILTER BAGS SHALL BE INSPECTED ON A WEEKLY BASIS AND AFTER EACH RUNOFF EVENT. BAGS SHALL BE EMPTIED AND RINSED OR REPLACED WHEN HALF FULL OR WHEN FLOW CAPACITY HAS BEEN REDUCED SO AS TO CAUSE FLOODING OR BYPASSING OF THE INLET. DAMAGED OR CLOGGED BAGS SHALL BE REPLACED. A SUPPLY SHALL BE MAINTAINED ON SITE FOR REPLACEMENT OF BAGS. ALL NEEDED REPAIRS SHALL BE INITIATED IMMEDIATELY AFTER THE INSPECTION. DISPOSE ACCUMULATED SEDIMENT AS WELL AS ALL USED BAGS ACCORDING TO THE PLAN NOTES.

DO NOT USE ON MAJOR PAVED ROADWAYS WHERE PONDING MAY CAUSE TRAFFIC HAZARDS.

STANDARD CONSTRUCTION DETAIL #4-16
FILTER BAG INLET PROTECTION - TYPE M INLET

NOT TO SCALE

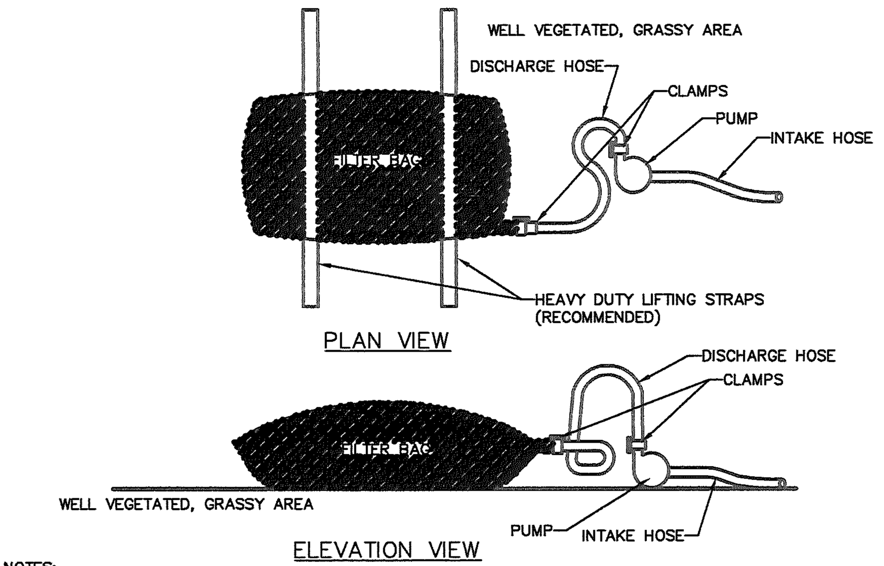

NOTES:

LOW VOLUME FILTER BAGS SHALL BE MADE FROM NON-WOVEN GEOTEXTILE MATERIAL SEWN WITH HIGH STRENGTH, DOUBLE STITCHED "J" TYPE SEAMS. THEY SHALL BE CAPABLE OF TRAPPING PARTICLES LARGER THAN 150 MICRONS. HIGH VOLUME FILTER BAGS SHALL BE MADE FROM WOVEN GEOTEXTILES THAT MEET THE FOLLOWING STANDARDS:

PROPERTY	TEST METHOD	MINIMUM STANDARD
AVG. WIDE WIDTH STRENGTH	ASTM D-4884	60 LB/IN
GRAB TENSILE	ASTM D-4632	205 LB
PUNCTURE	ASTM D-4833	110 LB
MULLEN BURST	ASTM D-3786	350 PSI
UV RESISTANCE	ASTM D-4355	70%
AOS % RETAINED	ASTM D-4751	80 SIEVE

A SUITABLE MEANS OF ACCESSING THE BAG WITH MACHINERY REQUIRED FOR DISPOSAL PURPOSES SHALL BE PROVIDED. FILTER BAGS SHALL BE REPLACED WHEN THEY BECOME 1/2 FULL OF SEDIMENT. SPARE BAGS SHALL BE KEPT AVAILABLE FOR REPLACEMENT OF THOSE THAT HAVE FAILED OR ARE FILLED. BAGS SHALL BE PLACED ON STRAPS TO FACILITATE REMOVAL UNLESS BAGS COME WITH LIFTING STRAPS ALREADY ATTACHED.

BAGS SHALL BE LOCATED IN WELL-VEGETATED (GRASSY) AREA, AND DISCHARGE ONTO STABLE, EROSION RESISTANT AREAS. WHERE THIS IS NOT POSSIBLE, A GEOTEXTILE UNDERLAYMENT AND FLOW PATH SHALL BE PROVIDED. BAGS MAY BE PLACED ON FILTER STONE TO INCREASE DISCHARGE CAPACITY. BAGS SHALL NOT BE PLACED ON SLOPES GREATER THAN 5%. FOR SLOPES EXCEEDING 5%, CLEAN ROCK OR OTHER NON-ERODIBLE AND NON-POLLUTING MATERIAL MAY BE PLACED UNDER THE BAG TO REDUCE SLOPE STEEPNESS.

NO DOWNSLOPE SEDIMENT BARRIER IS REQUIRED FOR MOST INSTALLATIONS. COMPOST BERM OR COMPOST FILTER SOCK SHALL BE INSTALLED BELOW BAGS LOCATED IN HQ OR EV WATERSHEDS, WITHIN 50 FEET OF ANY RECEIVING SURFACE WATER OR WHERE GRASSY AREA IS NOT AVAILABLE.

THE PUMP DISCHARGE HOSE SHALL BE INSERTED INTO THE BAGS IN THE MANNER SPECIFIED BY THE MANUFACTURER AND SECURELY CLAMPED. A PIECE OF PVC PIPE IS RECOMMENDED FOR THIS PURPOSE.

THE PUMPING RATE SHALL BE NO GREATER THAN 750 GPM OR 1/2 THE MAXIMUM SPECIFIED BY THE MANUFACTURER, WHICHEVER IS LESS. PUMP INTAKES SHALL BE FLOATING AND SCREENED.

FILTER BAGS SHALL BE INSPECTED DAILY. IF ANY PROBLEM IS DETECTED, PUMPING SHALL CEASE IMMEDIATELY AND NOT RESUME UNTIL THE PROBLEM IS CORRECTED.

STANDARD CONSTRUCTION DETAIL #3-16
PUMPED WATER FILTER BAG

NOT TO SCALE

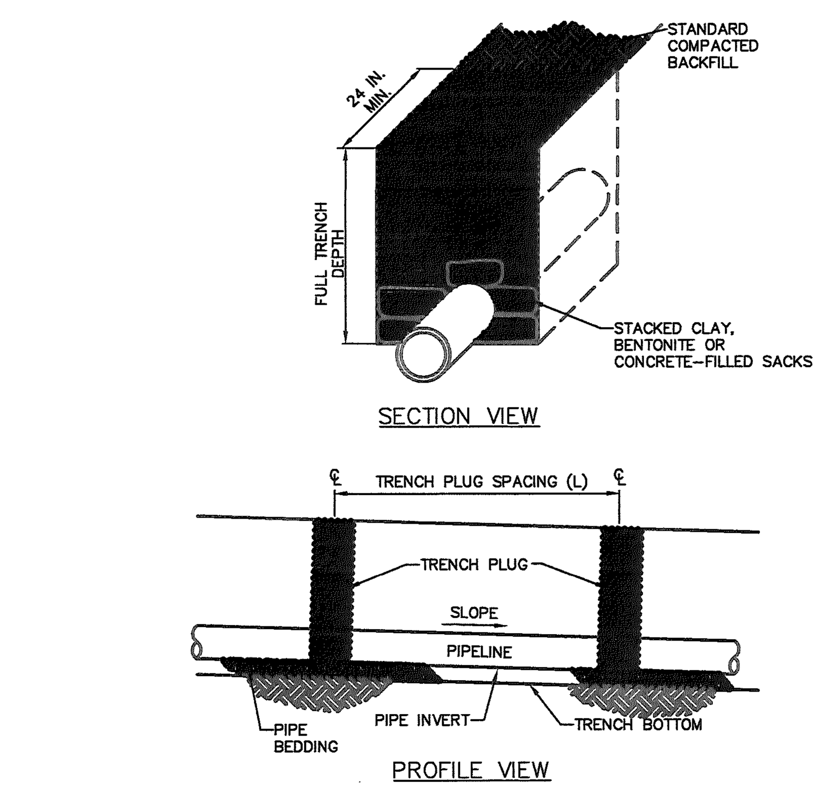

PA DEP EROSION CONTROL MANUAL TABLE 13.1
MAXIMUM SPACING AND MATERIALS FOR TRENCH PLUGS

TRENCH SLOPE (%)	SPACING L (FT)	PLUG MATERIAL
< 5	1000	* CLAY, BENTONITE, OR CONCRETE FILLED SACKS
5 – 15	500	* CLAY, BENTONITE, OR CONCRETE FILLED SACKS
15 – 25	300	* CLAY, BENTONITE, OR CONCRETE FILLED SACKS
25 – 35	200	* CLAY, BENTONITE, OR CONCRETE FILLED SACKS
35 – 100	100	* CLAY, BENTONITE, OR CONCRETE FILLED SACKS
> 100	50	CEMENT BAGS (WETTED) OR MORTARED STONE

* TOPSOIL MAY NOT BE USED TO FILL SACKS

NOTES:

IMPERVIOUS TRENCH PLUGS ARE REQUIRED FOR ALL STREAM, RIVER, WETLAND, OR OTHER WATER BODY CROSSINGS.

STANDARD CONSTRUCTION DETAIL #13-4
TRENCH PLUG INSTALLATION

NOT TO SCALE

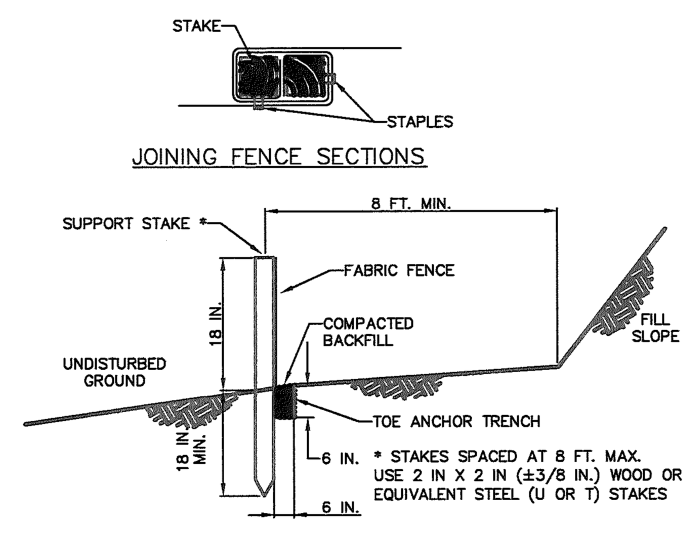

NOTES:

FABRIC SHALL HAVE THE MINIMUM PROPERTIES AS SHOWN IN TABLE 4.3 OF THE PA DEP EROSION CONTROL MANUAL.

FABRIC WIDTH SHALL BE 30 IN. MINIMUM. STAKES SHALL BE HARDWOOD OR EQUIVALENT STEEL (U OR T) STAKES.

SILT FENCE SHALL BE PLACED AT LEVEL EXISTING GRADE. BOTH ENDS OF THE FENCE SHALL BE EXTENDED AT LEAST 8 FEET UP SLOPE AT 45 DEGREES TO THE MAIN FENCE ALIGNMENT.

SEDIMENT SHALL BE REMOVED WHEN ACCUMULATIONS REACH HALF THE ABOVE GROUND HEIGHT OF THE FENCE.

ANY SECTION OF SILT FENCE WHICH HAS BEEN UNDERMINED OR TOPPED SHALL BE IMMEDIATELY REPLACED WITH A ROCK FILTER OUTLET (STANDARD CONSTRUCTION DETAIL # 4-6).

FENCE SHALL BE REMOVED AND PROPERLY DISPOSED OF WHEN TRIBUTARY AREA IS PERMANENTLY STABILIZED.

STANDARD CONSTRUCTION DETAIL #4-7
STANDARD SILT FENCE (18" HIGH)

NOT TO SCALE

STANDARD E&S WORKSHEET # 3
Standard Silt Fence

PROJECT NAME:
LOCATION:
PREPARED BY: Joseph P. Hanna, P.E. DATE:
CHECKED BY: Joseph P. Hanna, P.E. DATE:

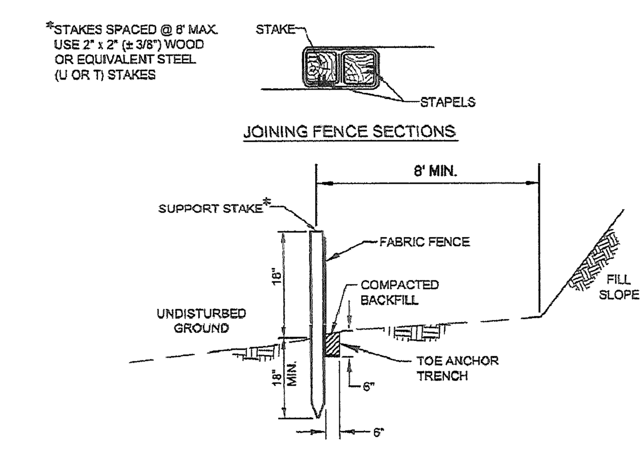

FENCE NO.	LOCATION	SLOPE PERCENT	SLOPE LENGTH ABOVE BARRIER (FT)

363-2134-008 / March 31, 2012 / Page 374

CHAPTER 4 - SEDIMENT BARRIERS AND FILTERS

Sediment barriers are typically used as perimeter controls for small disturbed areas and as initial protection against sediment pollution during construction of other BMPs such as sediment basins or traps. Each type of sediment barrier has specific advantages and limitations. Care should be exercised in the selection of any sediment barrier to ensure it is suited to the particular site conditions where it is proposed.

FIGURE 4.1
Sediment Barrier Alignment

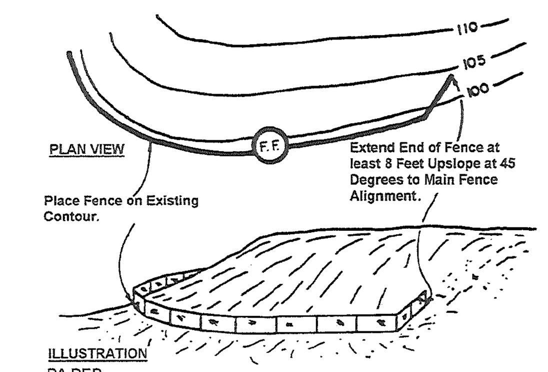

Sediment barriers should be installed on existing level grade in order to be effective. Barriers which cross contours divert runoff to a low point where failure usually occurs. The ends of sediment barriers should be turned upslope at 45 degrees to the main barrier alignment for a distance sufficient to elevate the bottom of the barrier ends to the elevation of the top of the barrier at the lowest point. This is to prevent runoff from flowing around the barrier rather than through it. For most locations, a distance of 8 feet will suffice, as shown in Figure 4.1. In locations where the topography is such that the barrier would have to extend for a long distance, a compacted berm tying into the ends of the barrier may be substituted for the upslope extension.

363-2134-008 / March 31, 2012 / Page 61

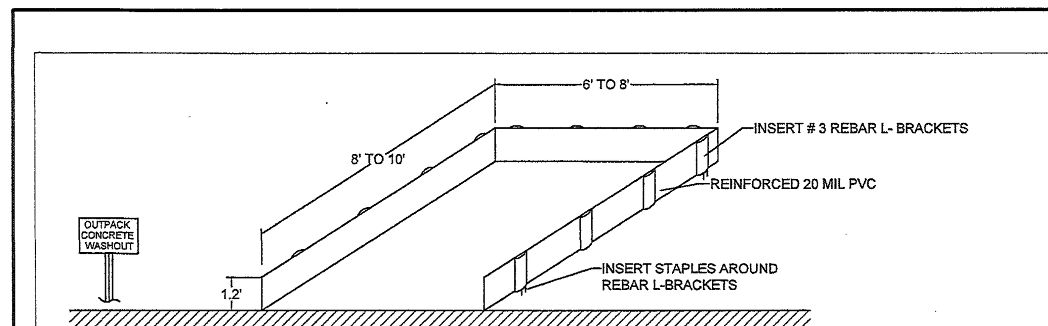

NOTES:
1. THE CONCRETE WASHOUT AREA SHALL BE INSTALLED PRIOR TO ANY CONCRETE PLACEMENT ON THIS PROJECT.
2. SIGNS SHALL BE PLACED AS NECESSARY TO CLEARLY INDICATE THE LOCATION OF THE CONCRETE WASHOUT.
3. THE CONCRETE WASHOUT AREA WILL BE REPLACED AS NECESSARY TO MAINTAIN CAPACITY FOR WASTE CONCRETE AND OTHER LIQUID WASTE.
4. WASHOUT RESIDUE SHALL BE REMOVED FROM THE SITE AND DISPOSED OF AT AN APPROVED WASTE SITE.
5. DO NOT MIX EXCESS AMOUNTS OF FRESH CONCRETE OR CEMENT ON-SITE.
7. DO NOT DUMPING EXCESS CONCRETE IN NON-DESIGNATED DUMPING AREAS.
8. LOCATE WASHOUT AREA AT LEAST 50' (15 METERS) FROM STORM DRAINS, OPEN DITCHES, OR WATERBODIES.
9. WASH OUT ONLY WASHOUT NON-HAZARDOUS WASTES INTO THE OUTPACK WASHOUT.

Outpak Washout

CONCRETE WASHOUT - For any project on which concrete will be poured or otherwise formed on site, a suitable washout facility must be provided for the cleaning of chutes, mixers, and hoppers of the delivery vehicles unless such a facility will be used at the source of the concrete. Under no circumstances may wash water from these vehicles be allowed to enter any surface waters. Make sure that proper signage is provided to drivers so that they are aware of the presence of washout facilities.

Washout facilities should not be placed within 50 feet of storm drains, open ditches or surface waters. They should be in a convenient location for the trucks, preferably near the place where the concrete is being poured, but far enough from other vehicular traffic to minimize the potential for accidental damage or spills. Wherever possible, they should be located on slopes not exceeding a 2% grade. Additional information on washouts may be obtained from EPA's stormwater website at:
http://cfpub.epa.gov/npdes/stormwater/menuofbmps/index.cfm?action=browsw&Rbutton=detail&bmp=117&minmeasure=4.

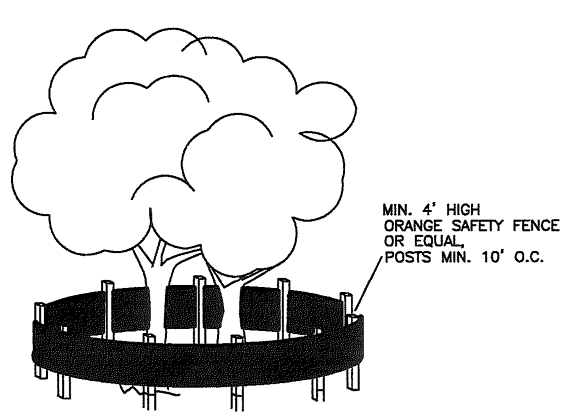

TREE PROTECTION DURING CONSTRUCTION DETAIL

NOTES:

1. BOX TREES WITHIN 25 FEET OF BUILDING AREA TO PREVENT MECHANICAL INJURY TO TREE. FENCING OF OTHER BARRIERS SHALL BE INSTALLED AT THE DRIP LINE OF THE TREE BRANCHES.
2. BOARDS SHALL NOT BE NAILED TO TREES DURING BUILDING OPERATIONS.
3. NO MORE THAN 1/3 OF FEEDER ROOTS SHALL NOT BE CUT IN AN AREA INSIDE THE DRIP LINE OF THE TREE BRANCHES.
4. DAMAGED TRUNKS OR EXPOSED ROOTS SHALL BE PAINTED IMMEDIATELY WITH A GOOD GRADE OF "TREE PAINT". CARE FOR SERIOUS INJURY SHALL BE PRESCRIBED BY A PROFESSIONAL FORESTOR OR LICENSED TREE EXPERT.
5. TREE LIMB REMOVAL, WHERE NECESSARY, WILL BE DONE FLUSH TO TRUNK OR MAIN BRANCH AND THAT STUB AREA WILL BE PAINTED WITH A GOOD GRADE OF "TREE PAINT".

TREE PROTECTION DURING CONSTRUCTION

N.T.S.

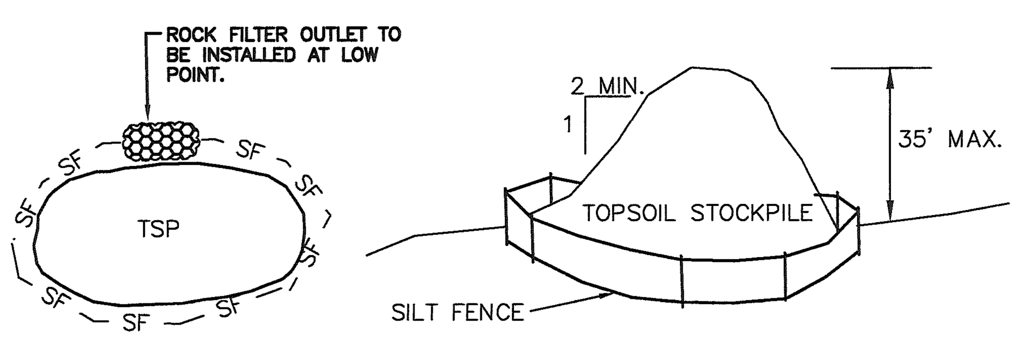

TOPSOIL STOCKPILE DETAIL

NOTES:
1. SILT FENCE MUST BE PLACED AROUND THE PERIMETER OF ALL STOCKPILES.
2. IMMEDIATELY STABILIZE STOCKPILES

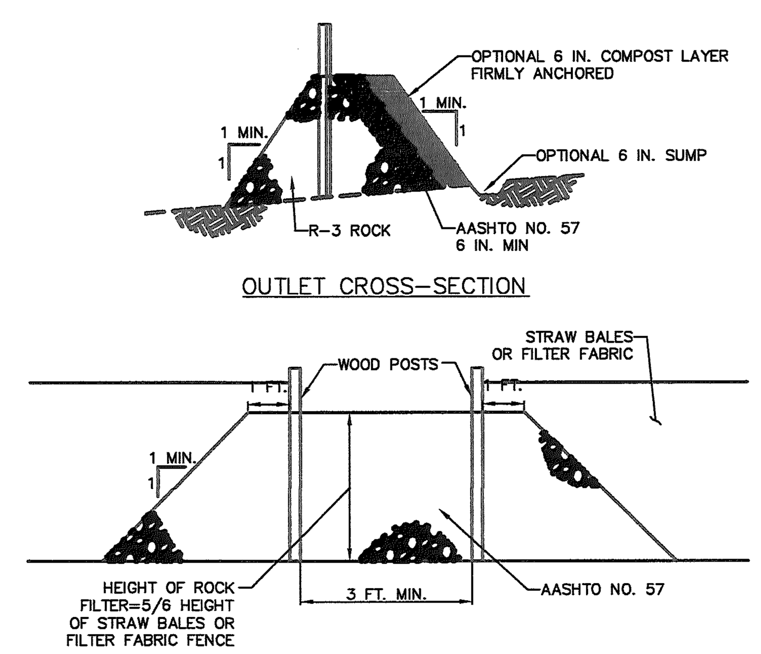

NOTES:

A ROCK FILTER OUTLET SHALL BE INSTALLED WHERE FAILURE OF A SILT FENCE OR STRAW BALE BARRIER HAS OCCURRED DUE TO CONCENTRATED FLOW. ANCHORED COMPOST LAYER SHALL BE USED ON UPSLOPE FACE IN HQ AND EV WATERSHEDS.

SEDIMENT SHALL BE REMOVED WHEN ACCUMULATIONS REACH 1/3 THE HEIGHT OF THE OUTLET.

STANDARD CONSTRUCTION DETAIL #4-6
ROCK FILTER OUTLET

NOT TO SCALE

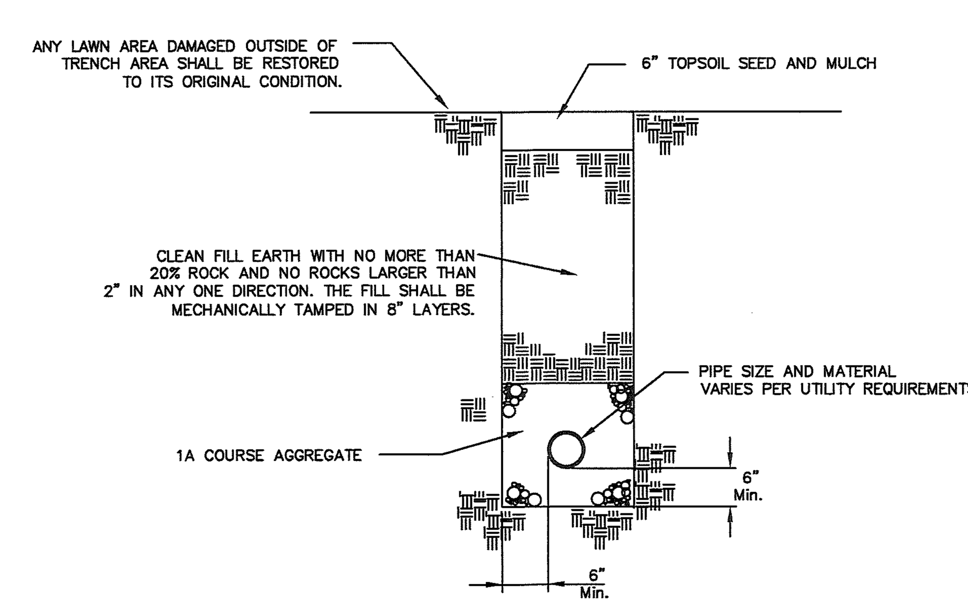

TRENCH RESTORATION IN LAWN AREAS

NTS

NOTE:
1. ALL MATERIALS SHALL CONFORM TO LOWER GWYNEDD TOWNSHIP CODE SPECIFICATIONS.

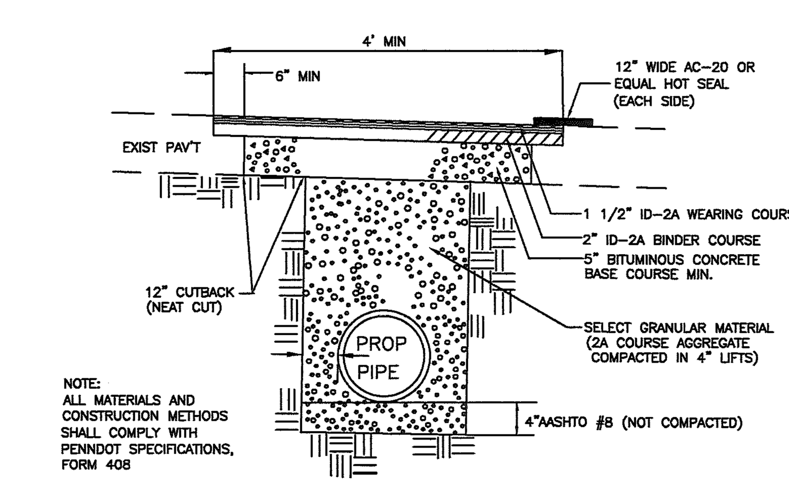

NOTE:
ALL MATERIALS AND CONSTRUCTION METHODS SHALL COMPLY WITH PENNDOT SPECIFICATIONS, FORM 408

TRENCH RESTORATION IN PAVED AREAS

N.T.S.

PRELIMINARY/FINAL LAND DEVELOPMENT

NO.	DATE	DESCRIPTION	BY
1	8/21/19	REV. AS PER TWP. ENG. LETTER DATED 4/15/19	JAS

SETTLEMENT AGREEMENT
EROSION & SEDIMENTATION CONTROL DETAILS
PREPARED FOR
2291 SOUTH VALLEY ROAD
WILLISTOWN TOWNSHIP
CHESTER COUNTY
PENNSYLVANIA

Chambers Associates, Inc.
Consulting Engineers and Surveyors
2962 Skippack Pike P.O. Box 678
Worcester, PA 19490-0678
484-991-8187

SCALE	DATE	JOB	DRAWING NO.
N.T.S.	2-11-19	713-005.03	SHEET 9 of 14
MANAGER: JPH		DRAWN BY: JAS	

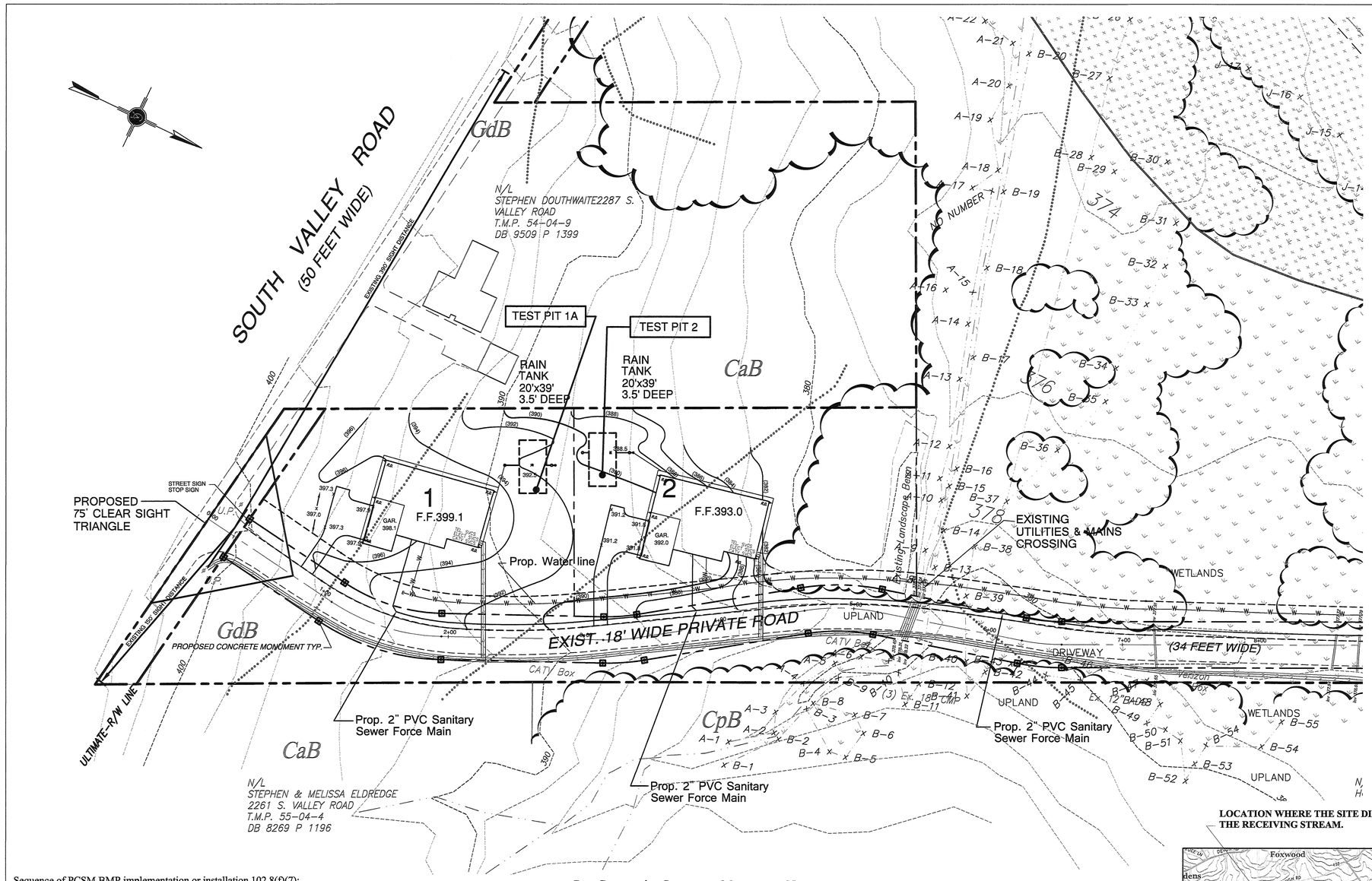

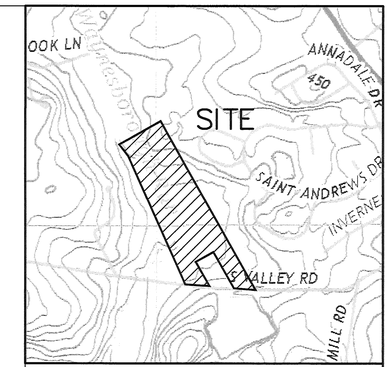

U.S.G.S. QUADRANGLE
VALLEY FORGE
1" = 800'

LEGEND	
SYMBOL	DESCRIPTION
	EXISTING WOOD LINE
	EXISTING TREE
	FIRE HYDRANT
	WATER VALVE
	GAS VALVE
	ENDWALL
	MANHOLE
	SIGNS
	EXISTING IRON PIN (UNLESS OTHERWISE NOTED)
	EXISTING GRADE
	PROPOSED GRADE
	EXISTING STORM SEWER
	PROPOSED STORM SEWER
	EXISTING SANITARY SEWER
	PROPOSED SANITARY SEWER
	EXISTING SANITARY SEWER LATERAL
	EXISTING WATER LINE
	PROPOSED WATER SERVICE
	EXISTING ELECTRIC LINE
	EXISTING GAS LINE
	EXISTING TELEPHONE LINE
	EXISTING CABLE LINE
	WETLANDS LINE
	WATERS OF THE U.S. LINE
	SOIL LINE
GeC3	SOIL TYPE
	EROSION CONTROL BLANKET
	CONSTRUCTION ENTRANCE
	TREE PROTECTION
	LIMIT OF DISTURBANCE
	SILT FENCE
	LIMIT OF NPDES
	BASIN DRAINAGE AREA
123.5x x123.5	SPOT ELEVATION
	COMPOST FILTER SOCK
	INLET PROTECTION
	RIP-RAP
	ROCK FILTER
	VEGETATED SWALE

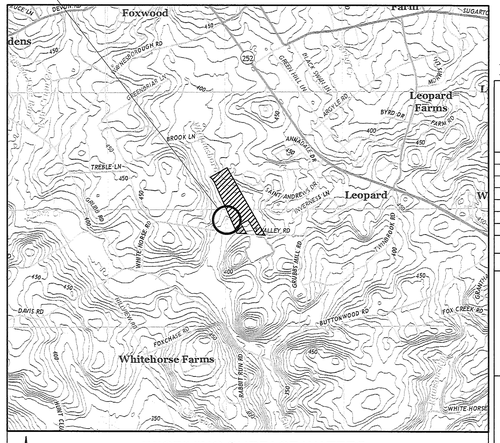

RECEIVING SURFACE WATERS
U.S.G.S. QUADRANGLE
1" = 2000'

Sequence of PCSM BMP implementation or installation 102.8(f)(7):

1. Field-mark limits of disturbance areas.
2. Install stabilized rock Construction Entrance as shown on plan.
3. Install all tree protection as shown on plans.
4. Install silt fence down slope of the proposed construction areas. Proposed silt fence can be adjusted to field conditions during construction (only with the consent of an erosion control inspector or reviewer.) Install inlet protection to existing inlets accordingly.
5. Clean and grub area of site for construction of house location and driveway area.
6. Strip topsoil, stockpile. Immediately install silt fence downslope from stockpile as shown on plans.
7. Rough grade house location and driveway area as shown on plan.
8. Start construction on approved house locations.
9. Install storm tank seepage bed, install sanitary lateral. Tree protection fence is to be installed around storm tank seepage bed areas to prevent soil compaction during construction. Inlet protection devices are to be installed on all inlets immediately after installation. Perform maintenance as necessary; maintenance includes removing debris from inlet and outlet structures, monitoring sediment accumulation and cleaning out sediment and floatable debris using catch basin cleaning equipment.
10. Install utilities (electric, water, cable, etc.). Immediately stabilize.
11. Install driveway area base material.
12. Fine grade site. Install erosion control blankets on all slopes created that are steeper than 3:1.
13. Spread the required depth of 6" topsoil on the site as final grading is achieved. Soil amendment to be added at this time. Apply permanent seeding, fertilize and mulch immediately upon final grading.
14. Install landscaping.
15. Remove temporary erosion control measures and structures only when tributary areas have been stabilized to the satisfaction of the appropriate party. An area shall be considered to have achieved final stabilization when it has a minimum uniform 70% perennial vegetative cover or other permanent non-vegetative cover with a density sufficient to resist accelerated surface erosion and subsurface characteristics sufficient to resist sliding and other movements. Sediment filters may only be removed if final stabilization is achieved.
16. Inspect all erosion control measures daily during the project's life, and in particular, after each runoff event.
17. Maintain all erosion and sediment control measures. Clean-out, repair or replace all measures as needed. Areas which continue to wash-out must be stabilized with jute netting, curlex blanket or rock lining.
18. Pave parking areas with finish wearing course.
19. Clean all erosion and sedimentation control facilities. All temporary erosion and sedimentation control measures and structures shall be removed only when the area has been completed and stabilized.

Post Construction Stormwater Management Notes:

1. Applicant is responsible for long term maintenance of the Rain Tank.
2. Any fill or topsoil leaving the site needs to go to a site inspector with an approved E&S plan.
3. Any trash or materials that can be recycled should be done so in accordance with local, federal and state requirements.

GENERAL PCSM PLANNING & DESIGN 102.8(b):

To minimize any increase in stormwater runoff volume , immediately after earth disturbance activities cease in any area or subarea of the project, the operator shall stabilize all disturbed areas. During non-germinating months, mulch or protective blanketing shall be applied as described in the plan. Areas not at finished grade, which will be reactivated within 1 year, may be stabilized in accordance with the temporary stabilization specifications. Those areas which will not be reactivated within 1 year shall be stabilized in accordance with the permanent stabilization specifications. In addition to stabilizing disturbed areas proposed Deciduous and Evergreen trees will be planted.

To minimize impervious coverage , the development of the proposed parking improvements has been designed to minimize the paving.

To maximize protection of existing drainage features and existing vegetation , temporary tree protection fence will be installed along existing trees to be saved.

To minimize land clearing and grading , Clearing, grubbing, and topsoil stripping shall be limited to those areas described in each stage of the construction sequence. General site clearing, grubbing and topsoil stripping may not commence in any stage or phase of the project until the E & S BMP's specified by the BMP sequence for that stage or phase have been installed and are functioning as described in this E & S plan.

To minimize soil compaction , at no time shall construction vehicles be allowed to enter areas outside the limit of disturbance boundaries shown on the plan maps. These areas must be clearly marked and fenced off before clearing and grubbing operations begin.

To utilize other structural or nonstructural BMPs that prevent or minimize changes in stormwater runoff, the site has been designed to utilize as many structural and non-structural BMPs as practical.

Geologic formations or soil conditions 102.8(f)(12)

There are no naturally occurring geologic formations or soil conditions that may have the potential to cause pollution during Earth Disturbance Activities.

Existing Cover:

Wooded and Meadow.

CHAPTER 93 CLASSIFICATION:

The existing on-site and off-site runoffs flow to Waynesborough Run.

PPC PLAN:

1. The site contractor must have a PPC plan available on the site at all times.

MAINTENANCE OF PERMANENT STORMWATER FACILITIES

INFILTRATION BED AND STORM SEWER

ACTIVITY
PROVIDE VISUAL INSPECTION OF INFILTRATION BED EVERY 2-3 MONTHS OR AFTER EVERY RAIN EVENT. 1. REMOVE ANY DEBRIS OR BLOCKAGES WITHIN THE INFILTRATION BEDS AND INLETS. 2. INLETS SHALL BE KEPT FREE OF WEEDS. 3. BARE AREAS MUST BE SEEDED IMMEDIATELY. 4. USE OF FERTILIZERS AND PESTICIDES SHOULD BE KEPT TO A MINIMUM.

BMP ACKNOWLEDGMENT

I HEREBY ACKNOWLEDGE THAT THE STORM WATER MANAGEMENT FACILITIES AND BMP'S ARE FIXTURES THAT CAN BE ATTACHED ONLY AFTER BEING APPROVED BY A LICENSED PROFESSIONAL.
THE AFORESAID STORM WATER MANAGEMENT FACILITIES ARE BMP'S AND FIXTURES THAT, ONCE INSTALLED, CAN BE ALTERED OR REMOVED ONLY AFTER APPROVAL BY THE PA DEP. THE PCSM BMP'S ARE A COVENANT THAT RUNS WITH THE LAND THAT IS BINDING UPON AND ENFORCEABLE BY SUBSEQUENT GRANTEES.

OWNER _____ DATE _____

PRELIMINARY/FINAL LAND DEVELOPMENT

40 0 40 80 120
GRAPHIC SCALE

NO.	DATE	DESCRIPTION	BY
1	8/21/19	REV. AS PER TWP. ENG. LETTER DATED 4/15/19	JAS

SETTLEMENT AGREEMENT

POST CONSTRUCTION STORMWATER MANAGEMENT PLAN – LOTS #1 & #2

PREPARED FOR

2291 SOUTH VALLEY ROAD

WILLISTOWN TOWNSHIP
CHESTER COUNTY
PENNSYLVANIA

Chambers Associates, Inc.
Consulting Engineers and Surveyors
2962 Skippack Pike P.O. Box 678
Worcester, PA 19490-0678
484-991-8187

SCALE	DATE	JOB	DRAWING NO.
1"=40'	2-11-19	713-005.03	SHEET 10 of 14
MANAGER: JPH		DRAWN BY: JAS	

U:\Projects\713005\DESIGN\PRESIDION SET 9-11-19.dwg, SL 10/1/2019 3:57:04 AM, Ricoh MP C6503SR

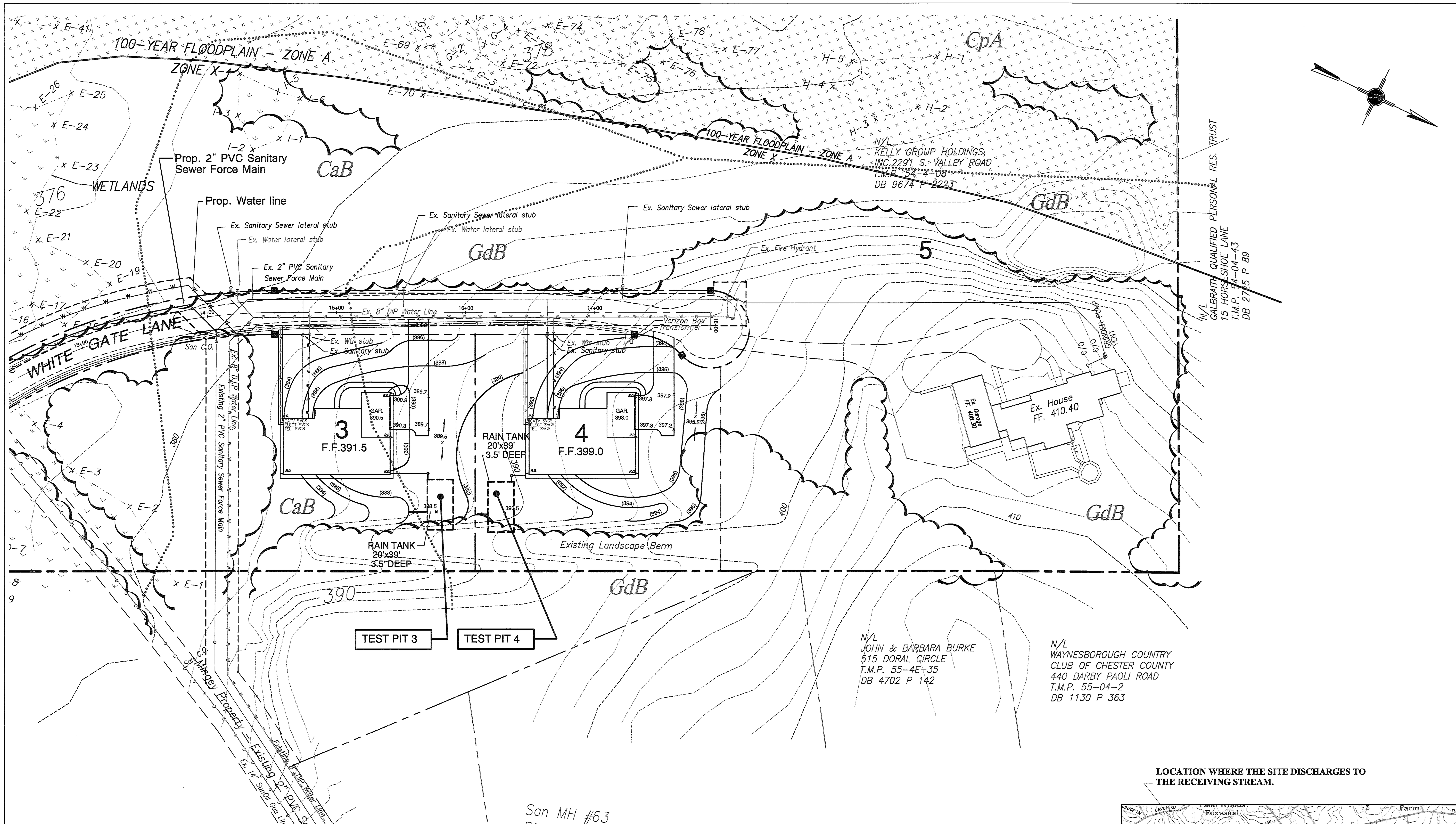

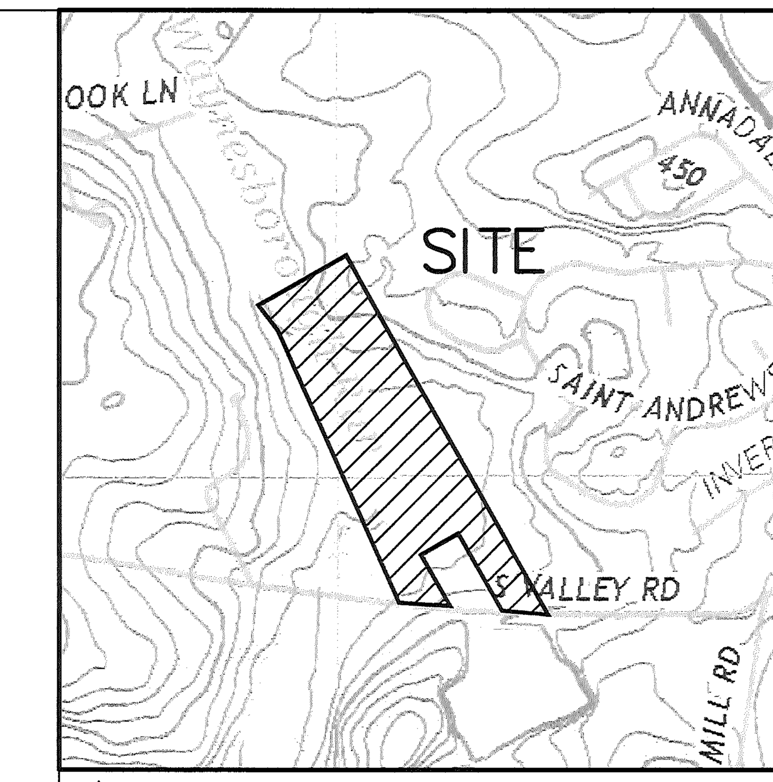

U.S.G.S. QUADRANGLE
VALLEY FORGE
1" = 800'

LEGEND	
SYMBOL	DESCRIPTION
	EXISTING WOOD LINE
	EXISTING TREE
	FIRE HYDRANT
W.V.	WATER VALVE
G.V.	GAS VALVE
	ENDWALL
	MANHOLE
	SIGNS
	EXISTING IRON PIN (UNLESS OTHERWISE NOTED)
	EXISTING GRADE
	PROPOSED GRADE
	EXISTING STORM SEWER
	PROPOSED STORM SEWER
	EXISTING SANITARY SEWER
	PROPOSED SANITARY SEWER
	EXISTING SANITARY SEWER LATERAL
	EXISTING WATER LINE
	PROPOSED WATER SERVICE
	EXISTING ELECTRIC LINE
	EXISTING GAS LINE
	EXISTING TELEPHONE LINE
	EXISTING CABLE LINE
	WETLANDS LINE
	WATERS OF THE U.S. LINE
	SOIL LINE
GeC3	SOIL TYPE
	EROSION CONTROL BLANKET
	CONSTRUCTION ENTRANCE
	TREE PROTECTION
	LIMIT OF DISTURBANCE
	SILT FENCE
	LIMIT OF NPDES
	BASIN DRAINAGE AREA
123.5x x123.5	SPOT ELEVATION
	COMPOST FILTER SOCK
	INLET PROTECTION
	RIP-RAP
	ROCK FILTER
	VEGETATED SWALE

Sequence of PCSM BMP implementation or installation 102.8(f)(7):

1. Field-mark limits of disturbance areas.
2. Install stabilized rock Construction Entrance as shown on plan.
3. Install all tree protection as shown on plans.
4. Install silt fence down slope of the proposed construction areas. Proposed silt fence can be adjusted to field conditions during construction (only with the consent of an erosion control inspector or reviewer.) Install inlet protection to existing inlets accordingly.
5. Clean and grub area of site for construction of house location and driveway area.
6. Strip topsoil, stockpile. Immediately install silt fence downslope from stockpile as shown on plans.
7. Rough grade house location and driveway area as shown on plan.
8. Start construction on approved house locations.
9. Install storm tank seepage bed, install sanitary lateral. Tree protection fence is to be installed around storm tank seepage bed areas to prevent soil compaction during construction. Inlet protection devices are to be installed on all inlets immediately after installation. Perform maintenance as necessary; maintenance includes removing debris from inlet and outlet structures, monitoring sediment accumulation and cleaning out sediment and floatable debris using catch basin cleaning equipment.
10. Install utilities (electric, water, cable, etc.). Immediately stabilize.
11. Install driveway area base material.
12. Fine grade site. Install erosion control blankets on all slopes created that are steeper than 3:1.
13. Spread the required depth of 6" topsoil on the site as final grading is achieved. Soil amendment to be added at this time. Apply permanent seeding, fertilize and mulch immediately upon final grading.
14. Install landscaping.
15. Remove temporary erosion control measures and structures only when tributary areas have been stabilized to the satisfaction of the appropriate party. An area shall be considered to have achieved final stabilization when it has a minimum uniform 70% perennial vegetative cover or other permanent non-vegetative cover with a density sufficient to resist accelerated surface erosion and subsurface characteristics sufficient to resist sliding and other movements. Sediment filters may only be removed if final stabilization is achieved.
16. Inspect all erosion control measures daily during the project's life, and in particular, after each runoff event.
17. Maintain all erosion and sediment control measures. Clean-out, repair or replace all measures as needed. Areas which continue to wash-out must be stabilized with jute netting, curlex blanket or rock lining.
18. Pave parking areas with finish wearing course.
19. Clean all erosion and sedimentation control facilities. All temporary erosion and sedimentation control measures and structures shall be removed only when the area has been completed and stabilized.

Post Construction Stormwater Management Notes:

1. Applicant is responsible for long term maintenance of the Rain Tank.
2. Any fill or topsoil leaving the site needs to go to a site inspector with an approved E&S plan.
3. Any trash or materials that can be recycled should be done so in accordance with local, federal and state requirements.

GENERAL PCSM PLANNING & DESIGN 102.8(b):

To minimize any increase in stormwater runoff volume, immediately after earth disturbance activities cease in any area or subarea of the project, the operator shall stabilize all disturbed areas. During non-germinating months, mulch or protective blanketing shall be applied as described in the plan. Areas not at finished grade, which will be reactivated within 1 year, may be stabilized in accordance with the temporary stabilization specifications. Those areas which will not be reactivated within 1 year shall be stabilized in accordance with the permanent stabilization specifications. In addition to stabilizing disturbed areas proposed Deciduous and Evergreen trees will be planted.

To minimize impervious coverage, the development of the proposed parking improvements has been designed to minimize the paving.

To maximize protection of existing drainage features and existing vegetation , temporary tree protection fence will be installed along existing trees to be saved.

To minimize land clearing and grading, Clearing, grubbing, and topsoil stripping shall be limited to those areas described in each stage of the construction sequence. General site clearing, grubbing and topsoil stripping may not commence in any stage or phase of the project until the E & S BMP's specified by the BMP sequence for that stage or phase have been installed and are functioning as described in this E & S plan.

To minimize soil compaction, at no time shall construction vehicles be allowed to enter areas outside the limit of disturbance boundaries shown on the plan maps. These areas must be clearly marked and fenced off before clearing and grubbing operations begin.

To utilize other structural or nonstructural BMPs that prevent or minimize changes in stormwater runoff, the site has been designed to utilize as many structural and non-structural BMPs as practical.

Geologic formations or soil conditions 102.8(f)(12)

There are no naturally occurring geologic formations or soil conditions that may have the potential to cause pollution during Earth Disturbance Activities.

Existing Cover:

Wooded and Meadow.

CHAPTER 93 CLASSIFICATION:

The existing on-site and off-site runoffs flow to Waynesborough Run.

PPC PLAN:

1. The site contractor must have a PPC plan available on the site at all times.

MAINTENANCE OF PERMANENT STORMWATER FACILITIES

INFILTRATION BED AND STORM SEWER

ACTIVITY
PROVIDE VISUAL INSPECTION OF INFILTRATION BED EVERY 2–3 MONTHS OR AFTER EVERY RAIN EVENT. 1. REMOVE ANY DEBRIS OR BLOCKAGES WITHIN THE INFILTRATION BEDS AND INLETS. 2. INLETS SHALL BE KEPT FREE OF WEEDS. 3. BARE AREAS MUST BE SEEDED IMMEDIATELY. 4. USE OF FERTILIZERS AND PESTICIDES SHOULD BE KEPT TO A MINIMUM.

BMP ACKNOWLEDGMENT

I HEREBY ACKNOWLEDGE THAT THE STORM WATER MANAGEMENT FACILITIES AND BMP'S ARE FIXTURES THAT CAN BE ATTACHED ONLY AFTER BEING APPROVED BY A LICENSED PROFESSIONAL.
THE AFORESAID STORM WATER MANAGEMENT FACILITIES ARE BMP'S AND FIXTURES THAT, ONCE INSTALLED, CAN BE ALTERED OR REMOVED ONLY AFTER APPROVAL BY THE PA DEP. THE PCSM BMP'S ARE A COVENANT THAT RUNS WITH THE LAND THAT IS BINDING UPON AND ENFORCEABLE BY SUBSEQUENT GRANTEES.

OWNER ____________ DATE ____________

LOCATION WHERE THE SITE DISCHARGES TO THE RECEIVING STREAM.

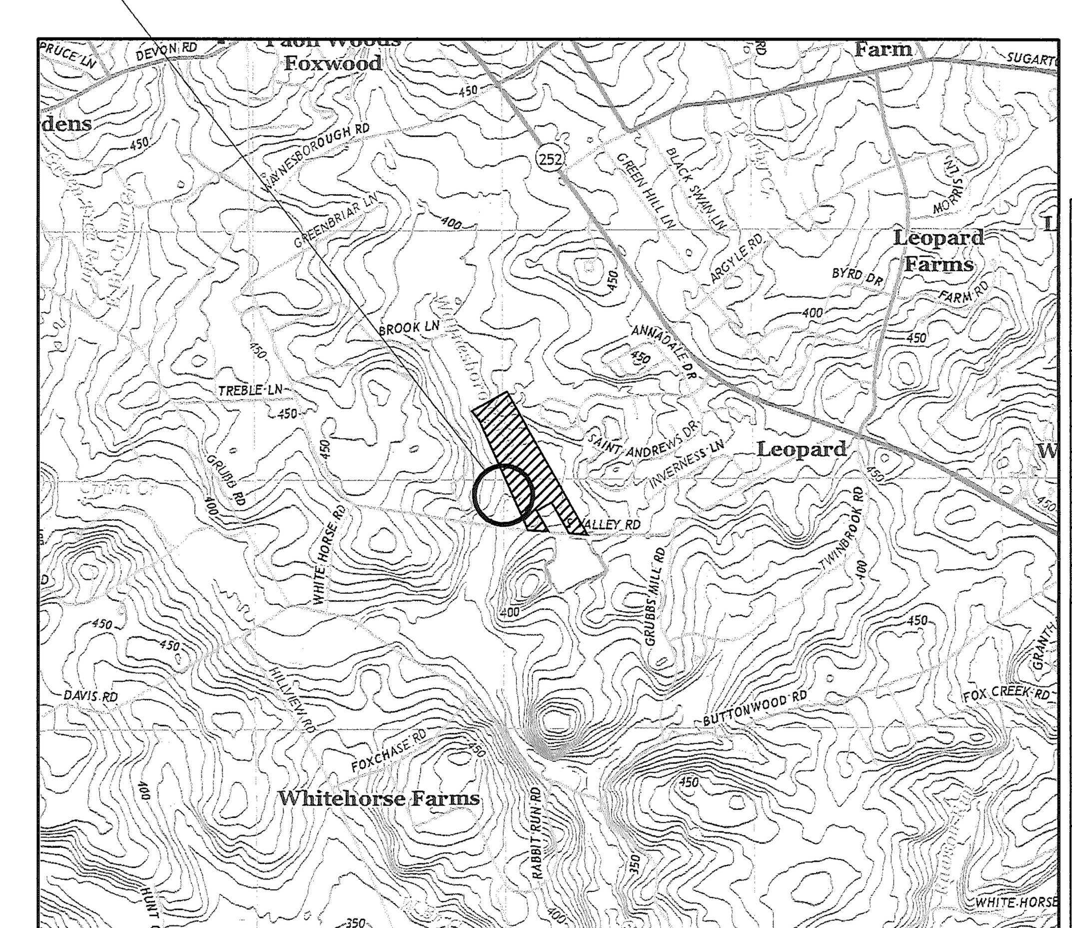

RECEIVING SURFACE WATERS
U.S.G.S. QUADRANGLE
1" = 2000'

PRELIMINARY/FINAL LAND DEVELOPMENT

40 0 40 80 120
GRAPHIC SCALE

NO.	DATE	DESCRIPTION	BY
1	8/21/19	REV. AS PER TWP. ENG. LETTER DATED 4/15/19	JAS

SETTLEMENT AGREEMENT

POST CONSTRUCTION STORMWATER MANAGEMENT PLAN – LOTS #3, #4 & #5

PREPARED FOR

2291 SOUTH VALLEY ROAD

WILLISTOWN TOWNSHIP
CHESTER COUNTY
PENNSYLVANIA

Chambers Associates, Inc.
Consulting Engineers and Surveyors
2962 Skippack Pike P.O. Box 678
Worcester, PA 19490–0678
484–991–8187

SCALE	DATE	JOB	DRAWING NO.
1"=40'	2-11-19	713-005.03	SHEET 11 of 14
MANAGER: JPH		DRAWN BY: JAS	

L:\Projects\713005.03\SUBMISSION SET 9-11-19.dwg, 11, 9/13/2019 7:57:23 AM,
Ricoh MP CW 2201 PCL6

POST CONSTRUCTION STORMWATER MANAGEMENT PLANNING AND DESIGN

THE FOLLOWING CRITERIA IS REQUIRED TO BE INCLUDED IN THE OVERALL STORMWATER MANAGEMENT DESIGN

1. Preserve the integrity of stream channels and maintain and protect the physical, biological and chemical qualities of the receiving stream. The overall site Post-Development stormwater runoff peak flows have been reduced to less than Pre-Development stormwater runoff peak flows. Stormwater management BMP's are utilized to promote the uptake of pollutants.

2. Prevent an increase in the rate of stormwater runoff. The overall site contains a large wet pond that has been utilized to control a majority of the site's runoff in the Post-Development condition. Numerous other BMP's are located throughout the site to help reduce runoff and improve water quality. A comparison of peak flows for the Pre- and Post-Development conditions and complete Hydrograph Post-Construction Stormwater Management Report.

3. Minimize any increase in stormwater runoff volume. Post Construction Stormwater BMP's for the overall site are proposed to minimize any increase in stormwater runoff. Non-Structural and Structural BMP's will help reduce stormwater volume and promote improvements in water quality. The site proposes additional BMP's, including amended soils, to further help reduce stormwater volume and promote improvements in water quality.

4. Minimize impervious areas. Impervious areas within the site have been minimized as much as possible. All of the proposed impervious areas drain to a Post-Construction Stormwater Management BMP.

5. Maximize the protection of existing drainage features and existing vegetation, temporary tree protection fence will be installed along existing trees to be saved. Post-Development flows for the overall site are being reduced to less than Pre-Development flows. Existing vegetation was mostly scrub brush. Landscape restoration is proposed to re-vegetate the site.

6. Minimize land clearing and grading, site grading for the overall site, exists primarily in the areas proposed for construction. Many areas have been left undisturbed and preserved as Open Space, including an existing channel that runs through a portion of the site.

7. Minimize the soil compaction, at no time shall construction vehicles be allowed to enter areas outside the limit of disturbance boundaries shown on the plan maps. These areas must be clearly marked and fenced off before clearing and grubbing operations begin.

8. Utilize other Structural or Non-Structural BMP's that prevent or minimize changes in stormwater runoff. Non-Structual BMP's for the overall site include disconnection of impervious, vegetated filter strips and rooftop areas. Structural BMP's for the overall site include vegetated swales, W.Q. Detention Basin, Wet Pond, Bio-Retention areas, Bio-Retention filters, Landscape restoration and wetland plantings / plugs, infiltration trenches and amended soils to further minimize the changes in stormwater runoff.

9. Minimize the generation of increased stormwater runoff, immediately after earth disturbance activities cease in any area or subarea of the project, the operator shall stabilize all disturbed areas. During non-germinating months, mulch or protective blanketing shall be applied as described in the plan. Areas not at finished grade, which will be reactivated within 1 year, may be stabilized in accordance with the temporary stabilization specifications. Those areas which will not be reactivated within 1 year shall be stabilized in accordance with the permanent stabilization specifications. In addition to stabilizing disturbed areas proposed Deciduous and Evergreen trees will be planted.

BMP DESCRIPTIONS

BMP #1 - BMP 6.4.4 INFILTRATION TRENCH
BMP #2 - BMP 6.4.5 BIO-RETENTION AREA
BMP #3 - BMP 6.7.2 LANDSCAPE RESTORATION

APPLICANT / RESPONSIBLE PARTY

BMP INSTALLATION

At such time that the site is stabilized and the temporary during construction erosion and sediment controls are removed, the permanent non-structural and structural BMP's will be installed and functioning. The structural facilities are intended to be permanent facilities that mitigate peak flows and volume, in addition to promoting water quality.

INSPECTION & RESPONSIBILITY OF MAINTENANCE

All stormwater management BMP's shall be owned and maintained by Homeowner. Homeowner shall conduct inspections and maintenance on a long-term and short-term schedule. Inspection and maintenance reports shall be submitted on an annual basis to Willistown Township (the "Township"). The reporting period for such data shall be from March 10 of the current calendar year to March 9 of the following calendar year and all reports must be submitted within five(5) business days from the end of the reporting period. The Township shall have the right, but not the duty, to inspect the stormwater management facilities, and if Homeowner fails to do so, perform neccessary maintenance.

ENGINEERING OVERSIGHT OF BMP INSTALLATION

The permittee shall provide engineering construction oversight during installation of the Bio-Retention areas, infiltration trenches and amended soils . A Licensed Professional Engineer knowledgeable in the design and construction of stormwater BMP's, preferably the design engineer, shall conduct the oversight.

SHORT TERM BMP OPERATION AND MAINTENANCE

1. Inspect BMP's after major storm events for damage and/or erosion activity, paying close attention to the embankments, spillway, and berm. Repair erosion with the appropriate measures immediately.

2. Inspect BMP plantings installed from containers on a monthly basis during the growing season for the first two years to evaluate plant establishment and mortality - replace dead plants with same or like plants able to establish in the cultural conditions present. If necessary, replace plants with a different species suitable to any microclimatic effects that might develop.

MAINTENANCE NOTES

1. Maintenance activities shall be done annually and within 48 hours after every major storm event (greater than 1-inch rainfall event).
2. Inspect and correct erosion problems, damage to vegetation, and sediment and debris accumulation (address when greater than 3 inches at any spot or covering vegetation).
3. Inspect vegetation on side slopes for erosion and formation of rills or gullies, correct as needed.
4. Inspect for pools of standing water, dewater and discharge to an approved location and restore to design grade.
5. During periods of extended drought, Rain Gardens may require watering.
6. Mow and trim vegetation to ensure safety, aesthetics, proper swale operation, or to suppress weeds and invasive vegetation; dispose of cutting in a local composting facility; mow only when swale is dry to avoid rutting.
7. Inspect for litter; remove prior to mowing.
8. Inspect swale inlet (curb cuts, pipes, etc.) and outlet for signs of erosion or blockage, correct as needed.

MAINTENANCE ACTIVITIES TO BE DONE AS NEEDED NOTES

1. Plant alternative grass species in the event of unsuccessful establishment.
2. Reseed bare areas; install appropriate erosion control measures when native soil is exposed or erosion channels are forming.
3. Rototill and replant swale if draw down time is more than 48 hours.
4. Inspect and correct check dams when signs of altered water flow (channelization, obstructions, erosion, etc.) are identified.
5. Water during dry periods, fertilize, and apply pesticide only when absolutely necessary.

TABLE E.1 LIMITATIONS OF PENNSYLVANIA SOILS PERTAINING TO EARTHMOVING PROJECTS

SOIL NAME	CUTBANKS CAVE	CORROSIVE TO CONCRETE \ STEEL	DROUGHTY	EASILY ERODIBLE	FLOODING	DEPTH TO SATURATED ZONE/SEASONAL HIGH WATER TABLE	HYDRIC / HYDRIC INCLUSIONS	LOW STRENGTH / LANDSLIDE PRONE	SLOW PERCOLATION	PIPING	POOR SOURCE OF TOPSOIL	FROST ACTION	SHRINK - SWELL	POTENTIAL SINKHOLE	PONDING	WETNESS
Califon	X	C/S				X		X	X			X				X
Cokesbury	X					X			X	X		X				
Gladstone	X	C		X			X		X			X	X			

Map Unit Symbol	Map Unit Name	Acres in AOI	Percent of AOI
CaB	Califon loam, 3 to 8 percent slopes	3.3	14.1%
CpA	Cokesbury silt loam, 0 to 3 percent slopes	12.1	51.1%
CpB	Cokesbury silt loam, 3 to 8 percent slopes	3.4	14.4%
GdB	Gladstone gravelly loam, 3 to 8 percent slopes	4.8	20.4%
Totals for Area of Interest		23.7	100.0%

BMP 5.6.3

NON-STRUCTURAL BMP's

RE-VEGETATE AND RE-FOREST DISTURBED AREAS , USING NATIVE SPECIES

CONSTRUCTION SEQUENCE

1. Use appropriate measures to eliminate undesirable species ahead of planting date.
2. Mark planting layout at the site.
3. Install plantings in accordance with applicable details.

MAINTENANCE NOTES

1. Application of a carefully selected herbicide around the protective tree shelters / tubes may be necessary, and reinforced by selective cutting / manual removal, if necessary.
2. This initial maintenance routine is necessary for the initial 2 to 3 years of growth and maybe necessary for up to 5 years until tree growth and tree canopy begins to form, naturally inhibiting wed growth (once shading is adequate, growth of invasives and other weeds will be naturally prevented, and the trees become self-maintaining).
3. Review of the new trees should be undertaken intermittently to determine if replacement trees should be provided (some modest rate of planting failure is usual).

Water Quality Functions
TSS: 85%
TP: 85%
NO3: 50%

BMP 5.9.1

NON-STRUCTURAL BMP's

STREETSWEEPING AND VACUUMING

APPLICATIONS

1. Remove tracked sediment from public or private roadways from the project in order to prevent sediment and dirt from entering storm drains or receiveing waters. Areas of concern include ingress and egress points.
2. Sweeping is to be done on a Bi-weekly schedule.

MAINTENANCE NOTES

1. Sweepers should have vacuum or other mechanical attachments for collecting dirt and sediment.
2. Inspect project ingress and egress points and roadways daily for signs of tracked sediment.
3. After sweeping is finished, properly dispose of sweeper waste. Sweeper waste that includes trash and debris should be disposed of at an approved dumpsite. for collected sediment that is free of trash and debris, consider incorporating the sediment back into the project's earthwork operations.
4. Designate a limited number of centralized ingress/egress locations for the site and instruct construction personnel to use only those locations for entering/exiting the project.
5. If sweeper is not picking up sediment, adjust sweeper brooms to maximize efficiency of sweeping operations.
6. Reduce excessive dust. Use Sweeper with water spray device to reduce dust. Never use kick brooms or sweeper attachements.

Water Quality Functions
TSS: 85%
TP: 85%
NO3: 50%

RECYCLING OR DISPOSAL OF MATERIALS 102.8(f)(11):

Non- Contaminated accumulated sediment removed from BMP's shall be disposed of in landscape areas outside of steep slopes, wetlands, floodplains or drainage swales and immediately stabilized, or placed in topsoil stockpiles.

The operator shall remove from this site, recycle, or dispose of all building materials and wastes in accordance with DEP's Solid Waste Management Regulations at 25 Pa. Code 260.1 et seq., 271.1 et seq. The contractor shall not illegally bury, dump, or discharge any building material or wastes at this site.

An E&S Plan shall be submitted to the department or authorized conservation district and implemented for all spoil and borrow areas, regardless of their location.

RECYCLING STATEMENT

INDIVIDUALS RESPONSIBLE FOR EARTH DISTURBANCE ACTIVITIES MUST ENSURE THAT PROPER MECHANISMS ARE IN PLACE TO CONTROL WASTE MATERIALS. CONSTRUCTION WASTES INCLUDE, BUT ARE NOT LIMITED TO, EXCESS SOIL MATERIALS. CONCRETE WASHWATER, SANITARY WASTES, ETC. THAT COULD ADVERSELY IMPACT WATER QUALITY. MEASURES SHOULD BE PLANNED AND IMPLEMENTED FOR HOUSEKEEPING, MATERIALS MANAGEMENT, AND LITTER CONTROL. WHEREVER POSSIBLE, RECYCLING OF EXCESS MATERIALS IS PREFERRED, RATHER THAN DISPOSAL.

SOIL RESOLUTIONS 102.8(f)(2):

1. **Low PH:** for soils with PH values lower than 5.5 adjust PH by applying lime at rates determined by soils testing in combination with selecting and planting vegetative species tolerant of acidic conditions.

2. **Low Fertility:** incorporate additional soil nutrients at rates determined by soil testing in combination with selecting and planting vegetative species tolerant of low fertility conditions.

3. **Dry or Droughty Soils:** select vegetative species tolerant of dry conditions.

4. **High Water Table or Wet/Hydric Soils prone to flooding:** select vegetative species tolerant of wet conditions. If buildings are located in said soils provide sump pumps with back flow prevention devices in basements. If high water is encountered during construction, contractor shall utilize pumped water filtration methods (ie. Dirt Bag). For basin construction in areas of wet soils, preferably relocate stormwater and sediment basins and facilities in soils more conductive to such facilities. If facilities can not be relocated, provide pumped water sediment removal facilities for basin construction, limit reservoir depths, and limit clean out elevations.

5. **Erodible Soils Types:** for soils with erodibility values higher than 0.36, contractor should incorporate some or all of the following stabilization techniques. In proposed channels, provide temporary linings until grass is established, provide permanent grass reinforced linings through the installation of sod or select permanent linings other than grasses. Decrease channel grades and increase channel widths to help reduce erosion.

6. **Soils prone to Sinkholes and Solution Channels:** locate stormwater retention facilities, sediment traps and basins, on other soil types. If facilities must be located in sinkhole susceptible soils, line reservoir area with plastic, clay, bentonite, or other acceptable linings. Limit standing water depths and retention times.

7. **Soils prone to Instability piping and seeping:** if stormwater or sediment basin/traps can not be relocated to other soil types, limit embankment slope steepness, provide clay embankment cores and import other soils for construction of embankment facilities as necessary.

8. **Soils Unsuitable for Winter grading, prone to frost action, or difficult to compact:** grading during periods prone to frost should be limited. Construction of structural embankment should be performed. During the period of May to October if such facilities cannot be relocated to an area with more conductive soils.

9. **Unsuitable Topsoil:** if suitable topsoil is not found on-site, topsoil shall be imported.

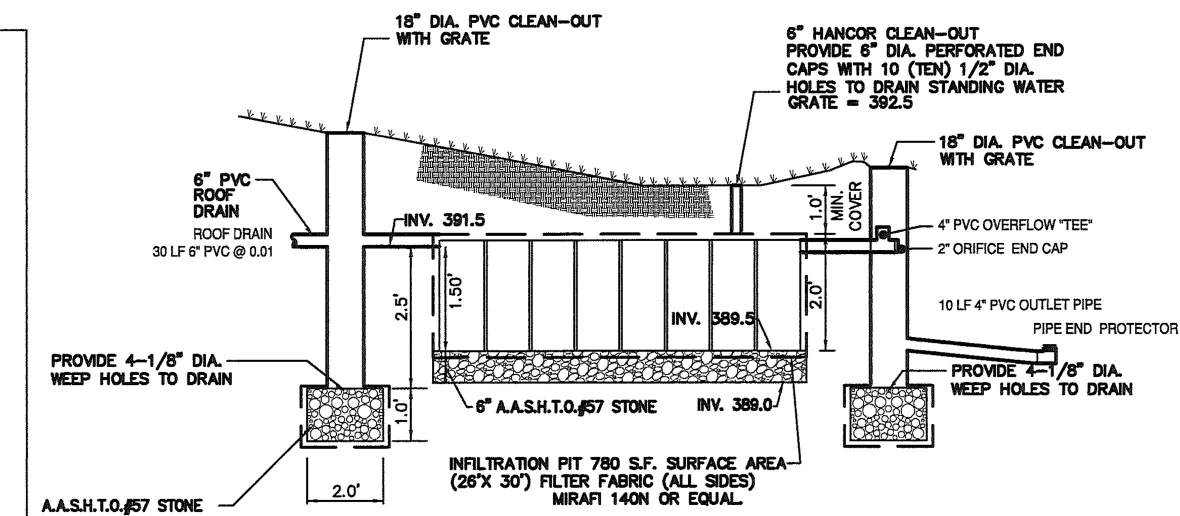

STORM TANK SEEPAGE BED DETAIL
BY BRENTWOOD INDUSTRIES OR SIMILIAR AS APPROVED BY THE TOWNSHIP ENGINEER
SEE MANUFACTURER FOR DETAILS, SPECIFICATIONS AND INSTALLATION PROCEDURES
N.T.S.
LOT #1

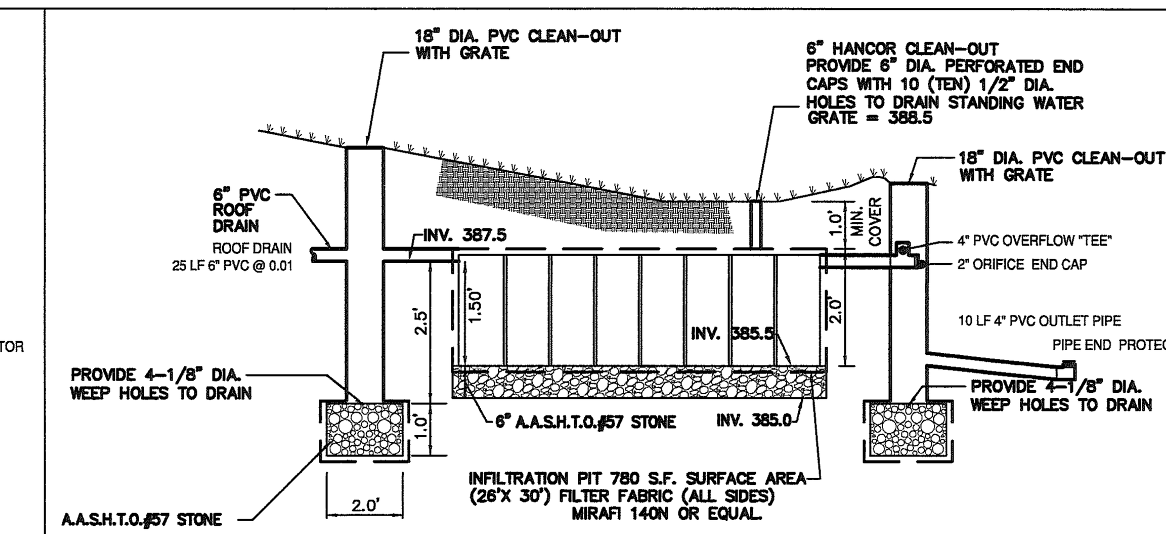

STORM TANK SEEPAGE BED DETAIL
BY BRENTWOOD INDUSTRIES OR SIMILIAR AS APPROVED BY THE TOWNSHIP ENGINEER
SEE MANUFACTURER FOR DETAILS, SPECIFICATIONS AND INSTALLATION PROCEDURES
N.T.S.
LOT #2

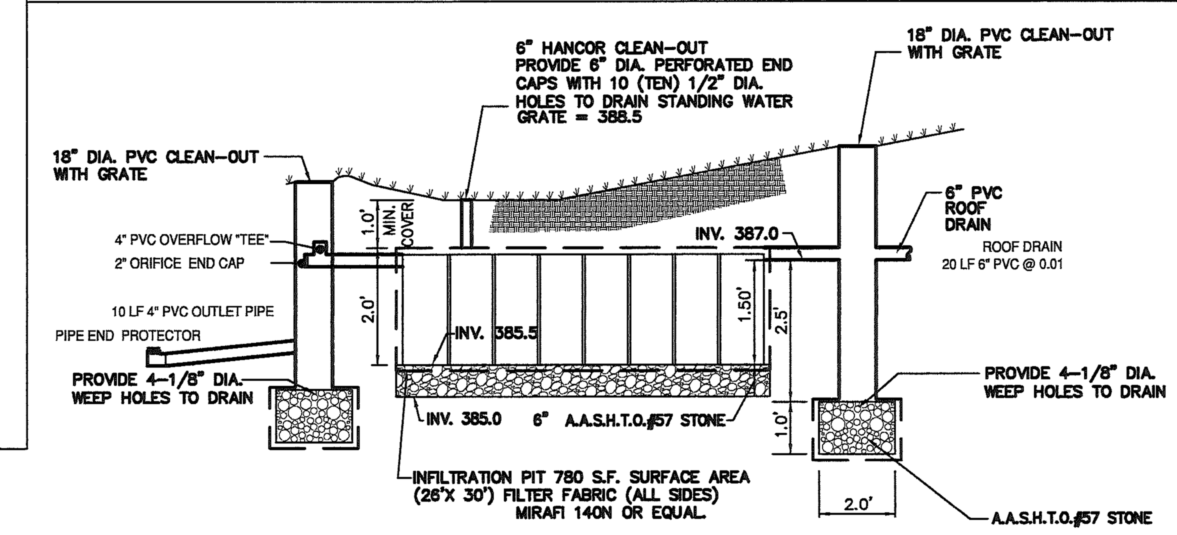

STORM TANK SEEPAGE BED DETAIL
BY BRENTWOOD INDUSTRIES OR SIMILIAR AS APPROVED BY THE TOWNSHIP ENGINEER
SEE MANUFACTURER FOR DETAILS, SPECIFICATIONS AND INSTALLATION PROCEDURES
N.T.S.
LOT #3

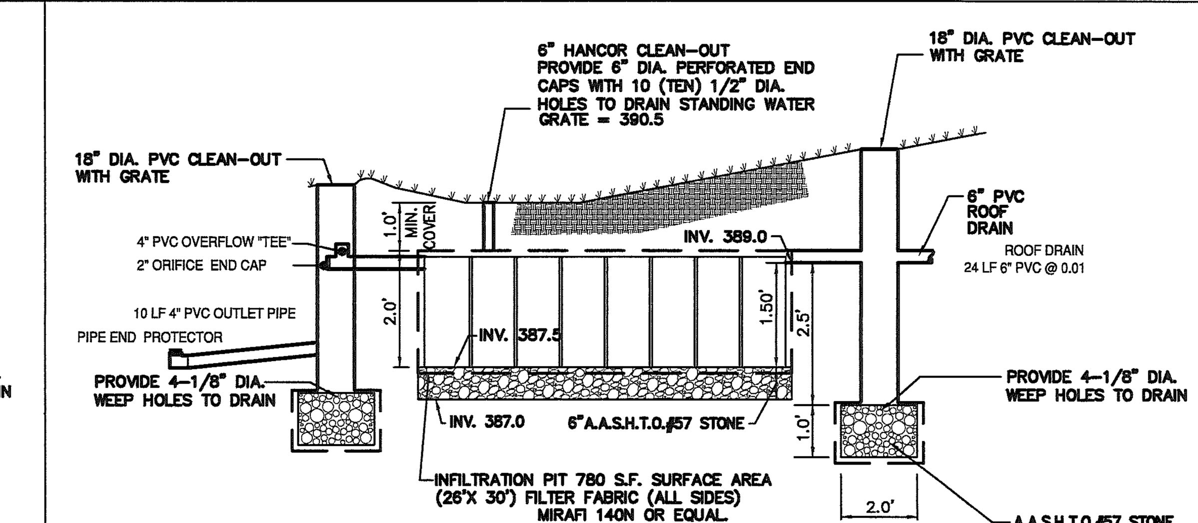

STORM TANK SEEPAGE BED DETAIL
BY BRENTWOOD INDUSTRIES OR SIMILIAR AS APPROVED BY THE TOWNSHIP ENGINEER
SEE MANUFACTURER FOR DETAILS, SPECIFICATIONS AND INSTALLATION PROCEDURES
N.T.S.
LOT #4

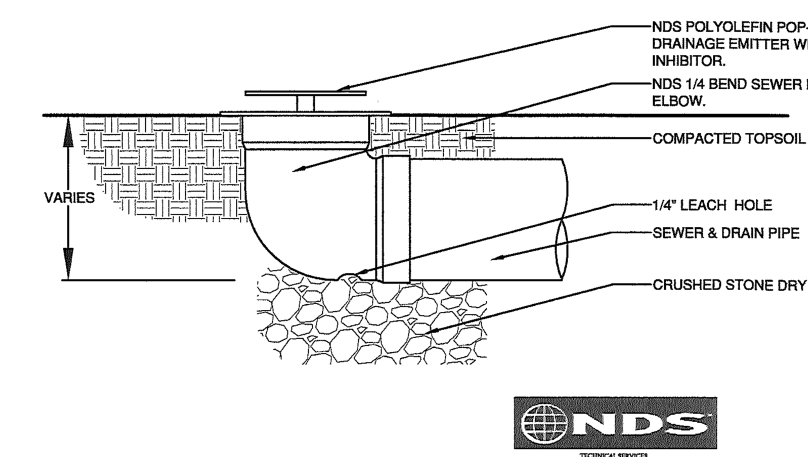

TYPICAL POP-UP DRAINAGE EMITTER
PIPE END PROTECTOR OR SIMILIAR AS APPROVED BY THE TOWNSHIP ENGINEER
NOT TO SCALE

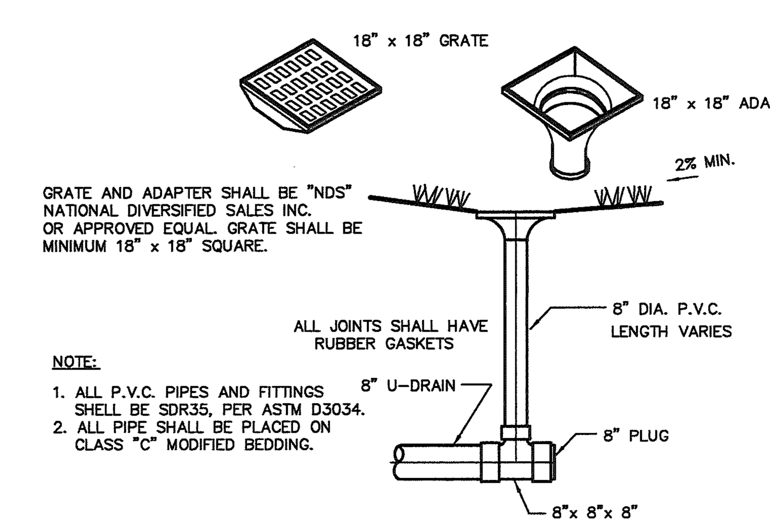

YARD DRAIN DETAIL
N.T.S.

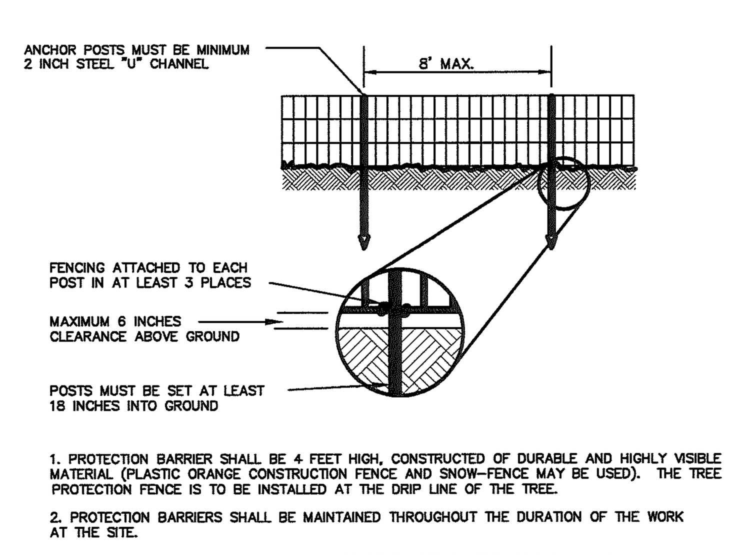

TREE PROTECTION FENCE FOR RAIN TANK AREAS
BARRIER FENCING
N.T.S.

LOCATION WHERE THE SITE DISCHARGES TO THE RECEIVING STREAM.

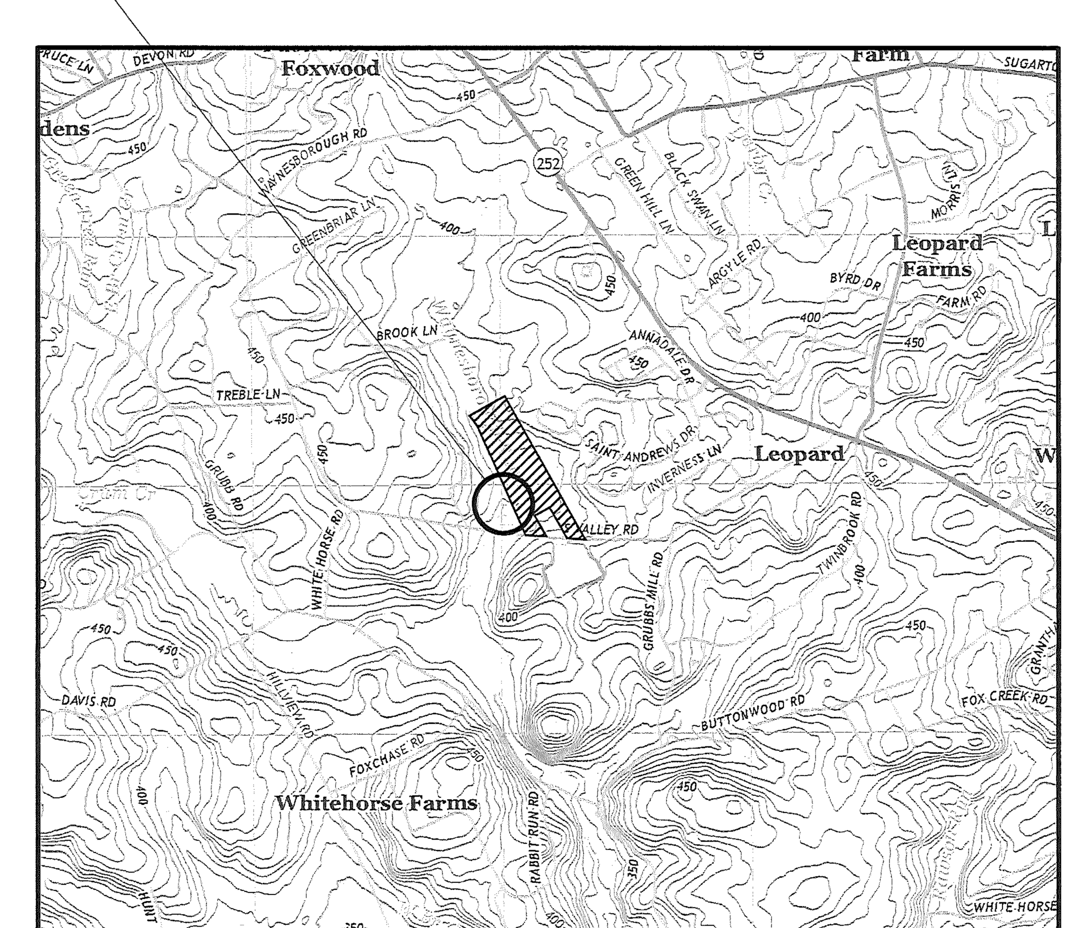

RECEIVING SURFACE WATERS
U.S.G.S. QUADRANGLE
1" = 2000'

BMP DESCRIPTIONS

5.4 Protect Sensitive and Special Value Resources
- BMP 5.4.1 Protect Sensitive / Special Value Features
- BMP 5.4.2 Protect / Conserve / Enhance Ripparian Areas
- BMP 5.4.3 Protect / Utilize Natural Flow Pathways in Overall Stormwater Planning and Design

5.5 Cluster and Concentrate
- BMP 5.5.1 Cluster Uses at Each Site; Build on the Smallest Area Possible
- BMP 5.5.2 Concentrate Uses area wide through Smart Growth Practices

5.6 Minimize Disturbance and Minimize Maintenance
- BMP 5.6.1 Minimize Total Disturbed Area - Grading
- BMP 5.6.2 Minimize Soil Compaction in Disturbed Areas
- BMP 5.6.3 Re-Vegetate and Re-Forest Disturbed Areas, Using Native Species

5.7 Reduce Impervious Cover
- BMP 5.7.1 Reduce Street Imperviousness
- BMP 5.7.2 Reduce Parking Imperviousness

5.8 Disconnect / Distribute / Decentralize
- BMP 5.8.1 Rooftop Disconnection
- BMP 5.8.2 Disconnection from Storm Sewers

5.9 Source Control
- BMP 5.9.1 Streetsweeping

6.4 Volume / Peak Rate ReDuction by Infiltration BMP's
- BMP 6.4.1 Pervious Pavement with Infiltration Bed
- BMP 6.4.2 Infiltration Basin
- BMP 6.4.3 Subsurface Infiltration Bed
- BMP 6.4.4 Infiltration Trench
- BMP 6.4.5 Rain Garden / Bioretention
- BMP 6.4.6 Dry Well / Seepage Pit
- BMP 6.4.7 Constructed Filter
- BMP 6.4.8 Vegetated Swale
- BMP 6.4.9 Vegetated Filter Strip
- BMP 6.4.10 Infiltration Berm & Retentive Grading

6.5 Volume / Peak Rate Reduction BMP's
- BMP 6.5.1 Vegetated Roof
- BMP 6.5.2 Runoff Capture & Reuse

6.6 Runoff Quality / Peak Rate BMP's
- BMP 6.6.1 Constructed Wetland
- BMP 6.6.2 Wet Pond / Retention Basin
- BMP 6.6.3 Dry Extended Detention Basin
- BMP 6.6.4 Water Quality Filters & Hydrodynamic Devices

6.7 Restoration BMP's
- BMP 6.7.1 Riparian Buffer Restoration
- BMP 6.7.2 Landscape Restoration
- BMP 6.7.3 Soils Amendment & Restoration
- BMP 6.7.4 Floodplain Restoration

6.8 Other BMP's and Related Structural Measures
- BMP 6.8.1 Level Spreader
- BMP 6.8.2 Special Detention Areas - Parking Lot, Rooftop

TABLE 6.8.1

VEGETATION FOR SWALES

Common Name	Scientific Name	Notes
Alkai Saltgrass	Puccinellia distans	Cool, good for wet, saline swales
Fowl Bluegrass	Poa palustris	Cool, good for wet swales
Canada Bluejoint	Calamagrostis canadensis	Cool, good for wet swales
Creeping Bentgrass	Agrostis palustris	Cool, good for wet swales, salt tolerant
Red Fescue	Festuca rubra	Cool, not for wet swales
Redtop	Agrostis gigantea	Cool, good for wet swales
Rough Bluegrass	Poa trivialis	Cool, good for wet, shady swales
Switchgrass	Panicum virgatum	Warm, good for wet swales, some salt tolerance
Wildrye	Elymus virginicus / rigarius	Cool, good for wet, shady swales

Notes: These grasses are sod forming and can withstand frequent inundation, and are ideal for the swale or grass channel environment. A few are also salt tolerant. Cool refers to cool season grasses that grow during the colder temperatures of spring and fall. warm refers to warm season grasses that grow most vigorously during the hot, mid-summer months.

PLANTING SOIL

should be a loam soil capable of supporting a healthy vegetative cover. Soils should be amended with a composted organic material. a typical organic amended soil is combined with 20-30% organic material (compost), and 70-80% soil base (preferably topsoil). Planting soil should be approximately 4 inches deeper than the bottom of the largest root ball.

VOLUME STORAGE SOILS

should also have a pH of between 5.5 and 6.5 (better pollutant absorption and microbial activity), a clay content less than 10% (a small amount of clay is beneficial to absorb pollutants and retain water), be free of toxic substances and unwanted plant material and have a 5-10% organic matter content. Additional organic matter can be added to the soil to increase water holding capacity (tests should be conducted to determine volume storage capacity of amended soils).

SWALE SOIL

shall be USCS class ML (Inorganic silts and very fine sands, rock flour, silty or clayey fine sands with slightly plastiоity), SM (Silty sands, poorly graded sand-silt mixtures), SW (Well-graded sands, gravelly sands, little or no fines) or SC (Clayey sands, poorly graded sand-clay mixtures). The first three of these designations are preferred for swales in cold climates. In general, soil with a higher percent organic content is preferred.

SWALE SAND

shall be ASTM C-33 fine aggregate concrete sand (0.02 in to 0.04 in).

WETLANDS MARKERS SET BY SCHMID & CO., INC. ON APRIL 28 & 30, 1999; LOCATED BY HOWARD W. DORAN ENGINEERING

WETLAND AREAS RECERTIFIED BY SCHMID & CO., INC. IN APRIL 2003. NO CHANGES TO DELINEATED WETLAND AREAS.

RECYCLING STATEMENT

INDIVIDUALS RESPONSIBLE FOR EARTH DISTURBANCE ACTIVITIES MUST ENSURE THAT PROPER MECHANISMS ARE IN PLACE TO CONTROL WASTE MATERIALS. CONSTRUCTION WASTES INCLUDE, BUT ARE NOT LIMITED TO, EXCESS SOIL MATERIALS. CONCRETE WASHWATER, SANITARY WASTES, ETC. THAT COULD ADVERSELY IMPACT WATER QUALITY. MEASURES SHOULD BE PLANNED AND IMPLEMENTED FOR HOUSEKEEPING, MATERIALS MANAGEMENT, AND LITTER CONTROL. WHEREVER POSSIBLE, RECYCLING OF EXCESS MATERIALS IS PREFERRED, RATHER THAN DISPOSAL.

PRELIMINARY/FINAL LAND DEVELOPMENT

NO.	DATE	DESCRIPTION	BY
1	8/21/19	REV. AS PER TWP. ENG. LETTER DATED 4/15/19	JAS

SETTLEMENT AGREEMENT

POST CONSTRUCTION STORMWATER MANAGEMENT NOTES & DETAILS

PREPARED FOR

2291 SOUTH VALLEY ROAD

WILLISTOWN TOWNSHIP
CHESTER COUNTY
PENNSYLVANIA

Chambers Associates, Inc.
Consulting Engineers and Surveyors
2962 Skippack Pike P.O. Box 678
Worcester, PA 19490-0678
484-991-8187

SCALE	DATE	JOB	DRAWING NO.
N.T.S.	2-11-19	713-005.03	SHEET 12 of 14
MANAGER: JPH		DRAWN BY: JAS	

L:\Projects\713005.03\SUBMISSION SET 9-11-19.dwg, 12, 9/13/2019 7:57:45 AM, Ricoh MP CW 2201 PCL6

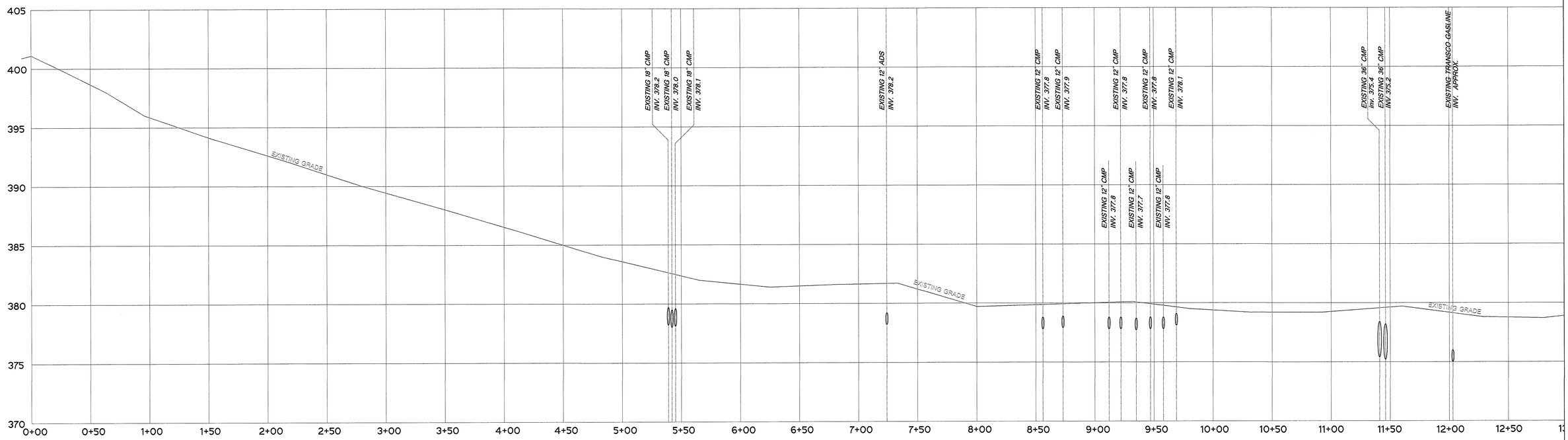

EXISTING ROAD PROFILE

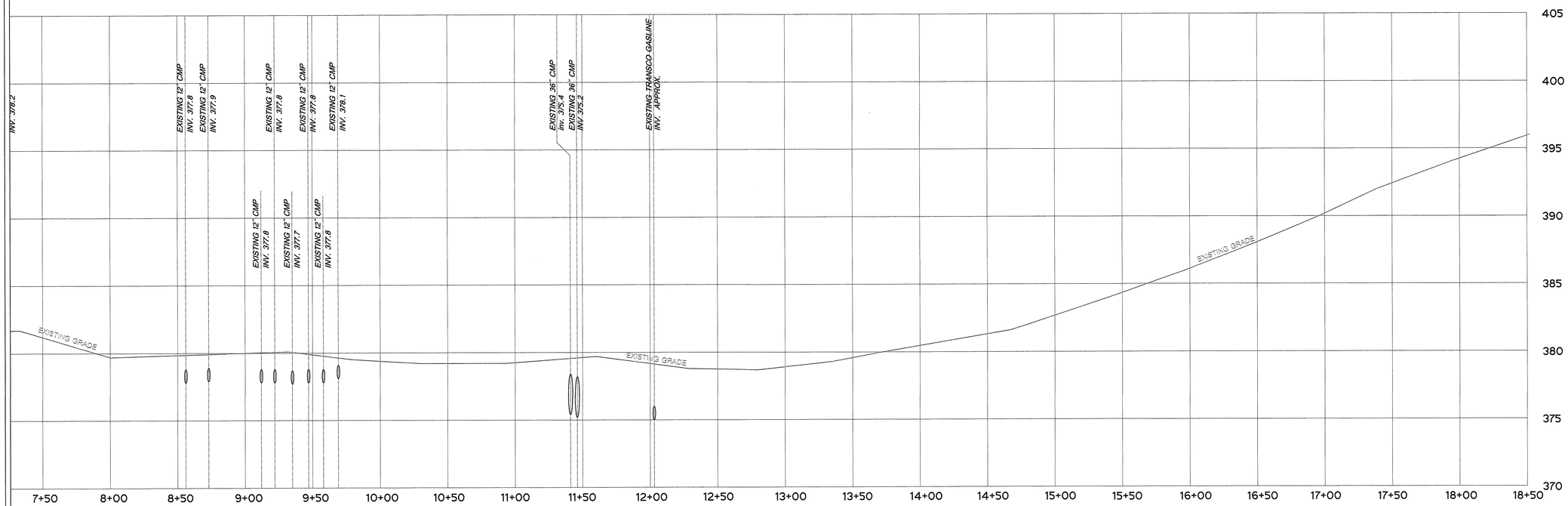

EXISTING ROAD PROFILE

PRELIMINARY/FINAL LAND DEVELOPMENT

NO.	DATE	DESCRIPTION	BY
1	8/21/19	REV. AS PER TWP. ENG. LETTER DATED 4/15/19	JAS

SETTLEMENT AGREEMENT

ROAD PROFILE

PREPARED FOR

2291 SOUTH VALLEY ROAD

WILLISTOWN TOWNSHIP

CHESTER COUNTY

PENNSYLVANIA

Chambers Associates, Inc.
Consulting Engineers and Surveyors
2962 Skippack Pike P.O. Box 678
Worcester, PA 19490-0678
484-991-8187

SCALE	DATE	JOB	DRAWING NO.
H:1:40/V:1:4	2-11-19	713-005.03	SHEET 13 of 14
MANAGER: JPH		DRAWN BY: JAS	

L:\Projects\713005.03\DWG\RDS\DWG SET P-3-11-19.dwg, 11, 8/21/2019 2:08:13 PM,
Radio PP CW 2004 PC6.5

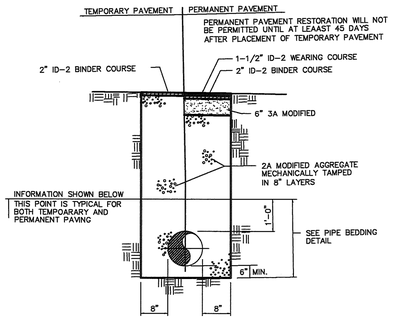

PAVEMENT, TRENCH RESTORATION AND BACKFILL
N.T.S.

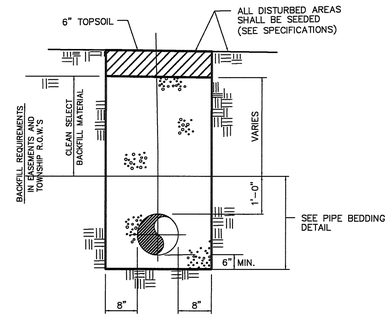

TRENCH RESTORATION AND BACKFILL FOR UNIMPROVED AREAS
N.T.S.

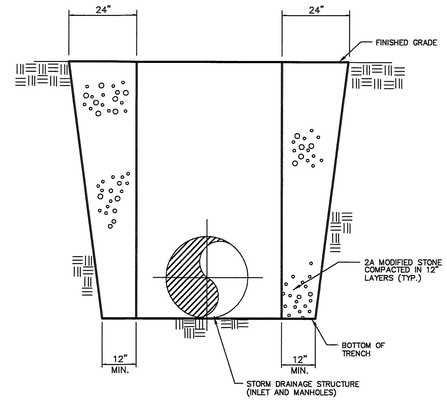

STORM DRAINAGE STRUCTURE BACKFILL
N.T.S.

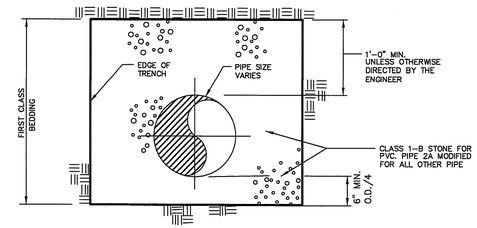

FIRST CLASS BEDDING AND BACKFILL
N.T.S.

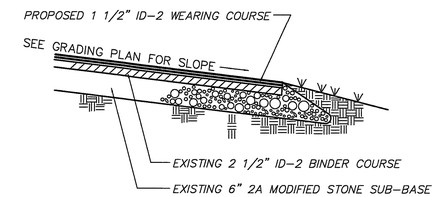

TYPICAL ROADWAY SECTION
N.T.S.

R1-1
STOP SIGN

(a) Justification. The Stop Sign (R1-1) is authorized for use on those streets or highways which intersect with a through highway or at a stop intersection so designated by the Department with reference to State-designated highways or local authorities with reference to highways under their jurisdiction. The R1-1 sign is also authorized for use in work zones involving one-lane, two-way roadways. At intersections where all approaches are controlled by an R1-1 sign, a supplemental ALL-WAY plaque (R1-3P) shall be mounted below each R1-1 sign.

(b) Authorization. Before local authorities designate any highway as a through highway or stop intersection which will intersect or affect a State-designated highway, approval of such designation shall first be obtained from the Department. Approval to install R1-1 signs in work areas shall not require the approval of the Department or local authorities when the conditions stipulated in the Department's Temporary Traffic Control Guidelines are satisfied.

(c) Size. The standard size R1-1 sign shall be 30" x 30" for single lane conventional highways and 36" x 36" for multi-lane conventional highways. The 24" x 24" size shall only be used for signs with restrictive physical conditions and vehicle usage that prohibits the installation of the standard size R1-1. A sign that is mounted back-to-back with a R1-1 sign should stay within the edges of the R1-1 sign. If necessary, the size of the R1-1 sign should be increased so that any other sign installed back-to-back with it remains within the edges of the R1-1 sign.

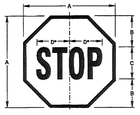

DIMENSIONS - IN					
SIGN SIZE A x A	B	C	D	BORDER	BLANK STD.
18" x 18"	6	6C	8	0.4	------
24" x 24"	8	8C	10	0.6	R1-24
30" x 30"	10	10C	12.5	0.8	R1-30
36" x 36"	12	12C	15	0.8	R1-36
48" x 48"	16	16C	20	1.2	R1-48

* REDUCE SPACING 40%

COLOR:

LEGEND AND BORDER:
WHITE (REFLECTORIZED)

BACKGROUND:
RED (REFLECTORIZED)

APPROVED FOR THE SECRETARY OF TRANSPORTATION
By: R. C. Brown Date: 02-29-12
Chief, Traffic Engineering and Permits Section
Bureau of Maintenance and Operations

R1.dgn

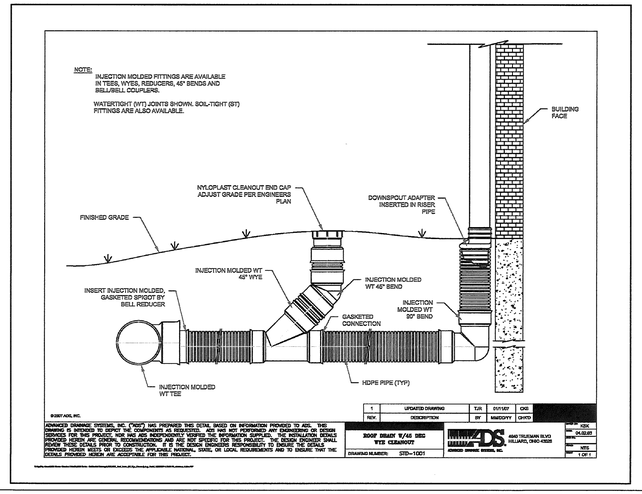

PRELIMINARY/FINAL LAND DEVELOPMENT

NO.	DATE	DESCRIPTION	BY
1	8/21/19	REV. AS PER TWP. ENG. LETTER DATED 4/15/19	JAS

SETTLEMENT AGREEMENT

DETAILS

PREPARED FOR

2291 SOUTH VALLEY ROAD

WILLISTOWN TOWNSHIP
CHESTER COUNTY
PENNSYLVANIA

Chambers Associates, Inc.
Consulting Engineers and Surveyors
2962 Skippack Pike P.O. Box 678
Worcester, PA 19490-0678
484-991-8187

SCALE	DATE	JOB	DRAWING NO.
N.T.S.	2-11-19	713-005.03	SHEET 14 of 14
MANAGER: JPH		DRAWN BY: JAS	

L:\Projects\713005.03\Engineering\SDP SET 8-1-19.dwg, L4, 8/13/2019 3:33:33 AM, Microsoft PDF Printer, 1=1

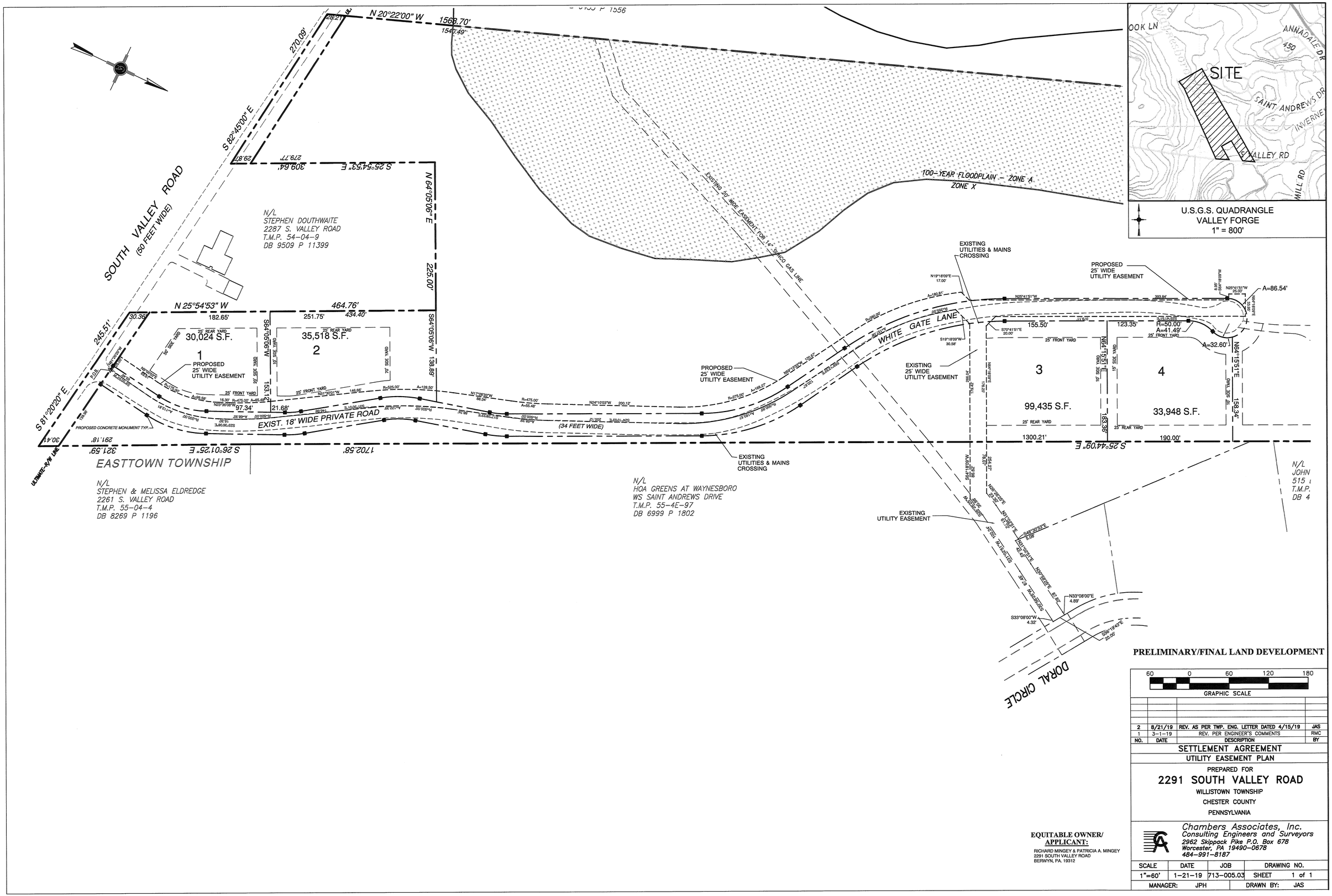

PRELIMINARY/FINAL LAND DEVELOPMENT

60 0 60 120 180

GRAPHIC SCALE

NO.	DATE	DESCRIPTION	BY
2	8/21/19	REV. AS PER TWP. ENG. LETTER DATED 4/15/19	JAS
1	3-1-19	REV. PER ENGINEER'S COMMENTS	RMC

SETTLEMENT AGREEMENT

UTILITY EASEMENT PLAN

PREPARED FOR

2291 SOUTH VALLEY ROAD

WILLISTOWN TOWNSHIP

CHESTER COUNTY

PENNSYLVANIA

EQUITABLE OWNER/ APPLICANT:

RICHARD MINGEY & PATRICIA A. MINGEY
2291 SOUTH VALLEY ROAD
BERWYN, PA. 19312

Chambers Associates, Inc.
Consulting Engineers and Surveyors
2962 Skippack Pike P.O. Box 678
Worcester, PA 19490-0678
484-991-8187

SCALE	DATE	JOB	DRAWING NO.
1"=60'	1-21-19	713-005.03	SHEET 1 of 1
MANAGER: JPH			DRAWN BY: JAS