PRELIMINARY SUBDIVISION AND LAND DEVELOPMENT PLANS

FOR

"TROUTBECK FARMS"

ACT 287 UNDERGROUND UTILITY PROTECTION ACT, AS AMENDED BY:

ACT 172 OF 1986, ACT 38 OF 1991, ACT 187 OF 1996,
ACT 199 OF 2004, ACT 181 OF 2006, ACT 121 OF 2008

PENNSYLVANIA ACT 287, AS AMENDED, REQUIRES THREE (3) WORKING DAYS NOTICE FOR CONSTRUCTION PHASE AND FIVE (5) WORKING DAYS NOTICE IN DESIGN STAGE.

PENNSYLVANIA ONE CALL SYSTEM INC. 1-800-242-1776 STOP-CALL BEFORE YOU DIG!

PENNSYLVANIA ACT 287, AS AMENDED BY ACT 121 REQUIRES NOTIFICATION OF EXCAVATORS, DESIGNERS, OR ANY PERSON PREPARING TO DISTURB THE EARTH'S SURFACE ANYWHERE IN THE COMMONWEALTH.

ACT 287 UNDERGROUND UTILITY PROTECTION ACT, AS AMENDED BY:
ACT 172 OF 1986, ACT 38 OF 1991, ACT 187 OF 1996,
ACT 199 OF 2004, ACT 181 OF 2006, ACT 121 OF 2008

FRY SURVEYING INC. HEREBY STATES THAT, PURSUANT TO THE PROVISIONS OF ACT NO. 287, OF THE PENNSYLVANIA LEGISLATURE, IT HAS PERFORMED THE FOLLOWING IN PREPARING THESE DRAWINGS REQUIRING EXCAVATION OR DEMOLITION WORK AT SITES WITHIN THE POLITICAL SUBDIVISION(S) SHOWN ON THE DRAWINGS:

1. PURSUANT TO SECTION 4, CLAUSE (2) OF SAID ACT, FRY SURVEYING INC. REQUESTED FROM EACH USER'S OFFICE DESIGNATED ON SUCH LIST PROVIDED BY THE ONE CALL SYSTEM NOTIFICATION, THE INFORMATION PRESCRIBED BY SECTION 4, CLAUSE (2) OF SAID ACT, NOT LESS THAN (10) NOR MORE THAN (90) WORKING DAYS BEFORE FINAL DESIGN TO BE COMPLETED.
2. PURSUANT TO SECTION 4, CLAUSE (5) OF SAID ACT, FRY SURVEYING INC. HAS MET THEIR OBLIGATIONS OF CLAUSE (2) BY CALLING THE ONE CALL SYSTEM SERVING THE LOCATION WHERE EXCAVATION IS TO BE PERFORMED.
3. PURSUANT TO SECTION 4, CLAUSE (3) OF SAID ACT, FRY SURVEYING INC. HAS SHOWN UPON THESE DRAWINGS "THE POSITION AND TYPE OF EACH LINE, AS DERIVED PURSUANT TO THE REQUEST MADE AS REQUIRED BY CLAUSE (2), THE SERIAL NUMBER PROVIDED BY THE ONE CALL SYSTEM, THE TOLL-FREE ONE CALL SYSTEM PHONE NUMBER, AND THE NAME OF THE USER, THE USER'S DESIGNATED OFFICE ADDRESS AND PHONE NUMBER AS SHOWN ON THE LIST REFERRED TO IN SECTION 4, CLAUSE (5) OF SAID ACT."

AND FRY SURVEYING INC. DOES NOT MAKE ANY REPRESENTATION, WARRANTY, ASSURANCE OR GUARANTEE THAT THE INFORMATION RECEIVED PURSUANT TO SAID REQUEST AND AS REFLECTED ON THESE DRAWINGS IS CORRECT OR ACCURATE, BUT FRY SURVEYING INC. IS REFLECTING SAID INFORMATION ON THESE DRAWINGS ONLY DUE TO THE REQUIREMENTS OF THE SAID ACT NO. 181 OF NOVEMBER 29, 2006.

ONE CALL SYSTEM SERIAL NO. NOTIFICATION BY FRY SURVEYING INC.
ONE CALL SYSTEM SERIAL NUMBER: **20183440384-000**
DATE: **12/12/2018**

UNDERGROUND UTILITY LOCATIONS ARE APPROXIMATE AND WERE DETERMINED FROM VISIBLE LOCATION, ACT 287, AS AMENDED, UTILITY RESPONSES AND/OR BEST AVAILABLE PLAN INFORMATION. FRY SURVEYING INC. CANNOT GUARANTEE THE EXACT LOCATION OF ANY UNDERGROUND UTILITIES OR STRUCTURES. AN EXACT LOCATION CAN ONLY BE OBTAINED BY SUBSURFACE EXPLORATION, WHICH IS NOT A PART OF THIS CONTRACT PERFORMANCE.

GENERAL NOTES:

1. THE EXISTING BOUNDARY INFORMATION SHOWN HEREON IS BASED ON A FIELD SURVEY PERFORMED AND PREPARED BY FRY SURVEYING, INC. IN DECEMBER 2018.
2. TOTAL DEVELOPMENT BOUNDARY SHOWN HEREON IS BASED ON THE "TROUTBECK FARMS - MINOR SUBDIVISION" LOT CONSOLIDATION PLAN.
3. THE WETLAND INFORMATION SHOWN HEREON IS BASED ON A WETLAND DELINEATION PERFORMED BY MELLON BIOLOGICAL SERVICES, LLC. IN JULY 2014. THE BOUNDARIES OF THE WETLAND DELINEATION WERE CONFIRMED BY VORTEX ENVIRONMENTAL DURING A SITE VISIT ON JULY 25, 2018.
4. FIELD SURVEY PERFORMED AND PREPARED BY FRY SURVEYING, INC. IN DECEMBER 2018.
5. IT IS NOT THE INTENT OF THIS PLAN TO ILLUSTRATE ANY SUBSURFACE CONDITIONS SHOULD THEY EXIST, I.E. BURIED TANKS, SEEPAGE BEDS, ETC.
6. THE PROPOSED RIGHT-OF-WAY FOR ROAD A, ROAD B AND THE EXTENSION OF FRAIRSHEEL LANE ARE INTENDED TO BE DEDICATED TO WILLISTOWN TOWNSHIP.
7. THE PROPOSED OPEN SPACE AREA IS NOT FOR DEDICATION AND WILL REMAIN PRIVATELY OWNED. THE HOMEOWNERS ASSOCIATION SHALL BE RESPONSIBLE FOR MAINTENANCE OF THE PARCEL. THE OPEN SPACE IS INTENDED TO BE USED FOR PASSIVE RECREATION AND TO BE MAINTAINED IN A MEADOW/NATURALISTIC COVER CONDITION.
8. ALL STORM WATER MANAGEMENT FACILITIES LOCATED OUTSIDE OF THE ROAD RIGHT-OF-WAY SHALL BE OWNED PRIVATELY BY THE HOMEOWNER'S ASSOCIATION. THE HOMEOWNERS ASSOCIATION SHALL BE RESPONSIBLE FOR MAINTENANCE OF THE STORM WATER MANAGEMENT FACILITIES.
9. PRIOR TO STARTING CONSTRUCTION, THE CONTRACTOR SHALL BE RESPONSIBLE TO ENSURE THAT ALL REQUIRED PERMITS AND APPROVALS HAVE BEEN OBTAINED. NO CONSTRUCTION OR FABRICATION SHALL BEGIN UNTIL THE CONTRACTOR HAS RECEIVED AND THOROUGHLY REVIEWED ALL PLANS AND OTHER DOCUMENTS BY ALL OF THE PERMITTING AUTHORITIES.
10. THE IMPROVEMENTS SHOWN WITHIN THE LOTS HAS BEEN PROVIDED TO SHOWN GENERAL COMPLIANCE WITH THE WILLISTOWN TOWNSHIP'S ORDINANCES. THE STORMWATER MANAGEMENT AND CONVEYANCE FACILITIES HAVE BEEN DESIGNED ASSUMING THE MAXIMUM ALLOWABLE COVERAGE ON THE LOTS. THE FINAL BUILDING FOOTPRINTS MAY VARY FROM THOSE DEPICTED HEREON. FINAL BUILDING DIMENSIONS SHALL ULTIMATELY CONFORM TO ALL APPLICABLE ZONING SETBACKS, IMPERVIOUS SURFACE COVERAGE RATIOS, ETC. INDIVIDUAL LOT PLOT PLANS DOCUMENTING COMPLIANCE ARE TO BE PROVIDED WITH THE SUBMISSION OF THE BUILDING PERMIT APPLICATIONS.
11. ALL CONSTRUCTION SHALL COMPLY WITH THE TOWNSHIP OF WILLISTOWN, CHESTER COUNTY AND PENNDOT STANDARDS.
12. MONITORING AND COMPACTION VERIFICATION FOR ALL SITE FILL PLACEMENT WILL NEED TO BE COMPLETED BY THE CONTRACTOR'S GEOTECHNICAL ENGINEER.
13. ALL SIGNS SHALL CONFORM TO THE REQUIREMENTS OF THE WILLISTOWN TOWNSHIP ZONING ORDINANCE. PRIOR TO SIGN CONSTRUCTION, ALL NECESSARY SIGN AND/OR ZONING PERMITS SHALL BE ACQUIRED.
14. PERMANENT CONCRETE MONUMENTS SHALL BE SET AT ALL CORNERS AND ANGLE POINTS OF THE BOUNDARIES OF THE ORIGINAL TRACT TO BE SUBDIVIDED AND SUCH INTERMEDIATE POINTS AS MAY BE REQUIRED. PERMANENT CONCRETE MONUMENTS SHALL BE SET AT ALL POINTS OF CURVATURE AND AT ALL POINTS OF TANGENCY ON A RIGHT-OF-WAY FOR ALL PUBLIC STREETS. MONUMENTS SHALL BE OF CONCRETE, WITH A FLAT TOP HAVING A MINIMUM WIDTH OR DIAMETER OF FOUR (4) INCHES AND A MINIMUM LENGTH OF THIRTY (30) INCHES.
15. LOT MARKERS SHALL BE PLACED AT ALL LOT CORNERS. MARKERS SHALL CONSIST OF IRON PIPES OR STEEL BARS AT LEAST 30 INCHES LONG AND NOT LESS THAN (3/4) INCH DIAMETER.
16. THE DEVELOPER SHALL BE RESPONSIBLE FOR INSTALLATION OF ALL STREET MONUMENTS, BOUNDARY PINS AND/OR MONUMENTS AND LOT CORNER PINS INDICATED ON THE PLANS. ALL MARKERS MUST BE INSTALLED PRIOR TO CLOSE OUT OF THE PROJECT WITH WILLISTOWN TOWNSHIP.
17. THE SPEED LIMIT FOR THE PROPOSED ROADWAYS IS 25 MPH.
18. PER FEMA MAP 42029C0160G, EFFECTIVE DATE SEPTEMBER 29, 2017, THE ENTIRE TRACT IS LOCATED WITHIN ZONE X.
19. NO DEBRIS SHALL BE BURIED ON THIS SITE. ALL DEBRIS SHALL BE DISPOSED OF OFF-SITE IN ACCORDANCE WITH ALL APPLICABLE TOWNSHIP, COUNTY, STATE AND FEDERAL LAWS AND REQUIREMENTS.
20. IT SHALL BE THE RESPONSIBILITY OF THE OWNER TO COMPLY WITH ALL APPLICABLE ADA REQUIREMENTS FOR SITE ACCESS AND ACCESS TO PUBLIC WAYS WHETHER SHOWN ON THESE PLANS OR NOT. IT SHALL BE THE OWNER'S RESPONSIBILITY TO CONSTRUCT SAID FACILITIES AND TO MAINTAIN SAID FACILITIES IN GOOD CONDITION. ALL APPLICABLE PROPOSED STRUCTURES AND FACILITIES SHALL COMPLY WITH "THE AMERICAN DISABILITIES ACT", "ACCESSIBILITY GUIDELINES FOR BUILDING AND FACILITIES", AND "THE PENNSYLVANIA UNIVERSAL ACCESSIBILITY ACT".

TRAFFIC CONTROL NOTES:

1. TRAFFIC CONTROL SIGNS MUST BE POSTED ON PENNDOT-APPROVED BREAKAWAY POSTS IN ACCORDANCE WITH THE MOST RECENT VERSION OF THE TC-8700 SERIES IN PENNDOT PUBLICATION 111M
2. ALL TRAFFIC CONTROL SIGNS SHALL BE POSTED IN ACCORDANCE WITH THE 2009 MUTCD AND THE MOST RECENT VERSIONS OF PENNDOT PUBLICATION 236M, "HANDBOOK OF APPROVED SIGNS."
3. CLEAR SIGHT TRIANGLES (C.S.T.) HAVE BEEN ESTABLISHED BY MEASURING 75' ALONG THE CENTERLINE OF EACH STREET FROM THE POINT OF INTERSECTION OF THE CENTERLINES OF THE STREETS. WITHIN SUCH TRIANGLES, NO WALL, FENCE OR OTHER OBSTRUCTION SHALL BE ERECTED, ALLOWED OR MAINTAINED, AND NO HEDGE, TREE, SHRUB OR OTHER GROWTH SHALL BE PLANTED OR EXIST ABOVE THE HEIGHT OF 30 INCHES AND BELOW THE HEIGHT OF 10 FEET MEASURED FROM THE CENTER LINE GRADES OF THE INTERSECTING STREETS.
4. ALL SIGHT DISTANCE OBSTRUCTIONS (INCLUDING BUT NOT LIMITED TO EMBANKMENTS AND VEGETATION) SHALL BE REMOVED BY THE APPLICANT TO PROVIDE A MINIMUM OF 300 FEET OF SIGHT DISTANCE TO BOTH THE LEFT AND RIGHT FOR A DRIVER EXITING ROAD A ONTO FOREST LANE. THE DRIVER MUST BE CONSIDERED TO BE POSITIONED 15' FROM THE NEAR EDGE OF THE CLOSEST HIGHWAY THROUGH TRAVEL LANE AT AN EYE HEIGHT OF THREE FEET-SIX INCHES (3 '-6") ABOVE THE PAVEMENT SURFACE. THE POINT SIGHTED BY THE EXITING DRIVER SHALL BE THREE FEET-SIX INCHES (3' -6") ABOVE THE PAVEMENT SURFACE LOCATED IN THE CENTER OF THE CLOSEST HIGHWAY TRAVEL LANE DESIGNATED FOR USE BY APPROACHING TRAFFIC. THIS SIGHT DISTANCE SHALL BE MAINTAINED BY THE APPLICANT AND/OR THE APPLICANT'S SUCCESSORS AND ASSIGNORS.

UTILITY NOTES:

1. THIS PLAN PROPOSES PUBLIC WATER SUPPLY AND PUBLIC SEWER. PUBLIC WATER WILL BE PROVIDED BY AQUA PENNSYLVANIA.
2. ALL WATER MAINS SHALL MEET THE REQUIREMENTS OF AND BE INSTALLED IN ACCORDANCE WITH THE SPECIFICATIONS, STANDARDS AND DETAILS OF AQUA PENNSYLVANIA.
3. WATER SUPPLY: ALL WATER SERVICES, INCLUDING DOMESTIC AND FIRE PROTECTION, SHALL MEET THE REQUIREMENTS OF AND BE INSTALLED IN ACCORDANCE WITH THE SPECIFICATIONS, STANDARDS AND DETAILS OF WILLISTOWN TOWNSHIP. SHOP DRAWINGS AND/OR CATALOG CUTS FOR ALL PROPOSED MATERIALS SHALL BE SUBMITTED TO WILLISTOWN TOWNSHIP AS PART OF THE APPLICATION FOR A PLUMBING PERMIT.
4. SANITARY SEWERAGE: ALL SANITARY SEWER MAINS SHALL MEET THE REQUIREMENTS OF AND BE INSTALLED IN ACCORDANCE WITH THE SPECIFICATIONS, STANDARDS AND DETAILS OF THE WILLISTOWN TOWNSHIP.
5. SANITARY SEWERAGE: ALL SEWER LATERALS SHALL MEET THE REQUIREMENTS OF AND BE INSTALLED IN ACCORDANCE WITH THE SPECIFICATIONS, STANDARDS AND DETAILS OF WILLISTOWN TOWNSHIP. SHOP DRAWINGS AND/OR CATALOG CUTS FOR ALL PROPOSED MATERIALS SHALL BE SUBMITTED TO WILLISTOWN TOWNSHIP.
6. THE SANITARY SEWER SHALL BE INSTALLED AT LEAST 10 FEET HORIZONTALLY AND AT LEAST 18 INCHES VERTICALLY FROM OTHER UTILITIES.
7. THE SANITARY SEWER MAINS AND LATERALS SHALL BE BURIED A MINIMUM OF 4 FEET DEEP.
8. OTHER UTILITIES: ALL OTHER UTILITIES (ELECTRIC, COMMUNICATIONS, GAS, ETC.) SHALL BE INSTALLED IN ACCORDANCE WITH THE UTILITY COMPANY'S REQUIREMENTS AND SHALL BE INSTALLED AS TO NOT CONFLICT WITH THE WATER, SANITARY SEWER AND/OR STORM FACILITIES PROPOSED AS PART OF THIS PLANS.
9. BACKFILL OF ALL UTILITY TRENCHES WITHIN EXISTING AND/OR PROPOSED RIGHT-OF-WAY SHALL BE DONE IN ACCORDANCE WITH THE SPECIFICATIONS, STANDARDS AND DETAILS OF WILLISTOWN AND BE SUBJECT TO THE APPROVAL OF WILLISTOWN TOWNSHIP OR THEIR DESIGNEE.

STORM WATER NOTES:

1. THE STORM WATER MANAGEMENT FACILITIES HAVE BEEN DESIGNED ASSUMING AN AMOUNT OF IMPERVIOUS COVERAGE BASED ON THE MAXIMUM ALLOWABLE IMPERVIOUS AREA PERMITTED BY THE WILLISTOWN TOWNSHIP ZONING ORDINANCE.
2. THE PROPOSED TREE PROTECTION AREA IS PART OF THE OVERALL SITE STORM WATER MANAGEMENT SYSTEM.
3. ROOF LEADERS SHALL BE DISCHARGED ONTO SPLASH BLOCKS AND DIRECTED TOWARDS VEGETATED SURFACES (AS PRACTICABLE).
4. ALL STORM CONVEYANCE PIPE SHALL BE SMOOTH LINED DOUBLE WALLED HIGH DENSITY POLYETHYLENE PIPE (HDPE), UNLESS OTHERWISE SPECIFIED.
5. END WALLS AND END SECTIONS SHALL BE REQUIRED ON ALL OPEN PIPES, SHALL BE OF CONCRETE CONSTRUCTION, AND SHALL BE SET ON A MINIMUM OF TWELVE (12) INCHES OF AASHTO NO. 57 (PENNDOT 2B) COARSE AGGREGATE

WAIVERS REQUESTED:
THE FOLLOWING WAIVER OF THE WILLISTOWN TOWNSHIP SUBDIVISION AND LAND DEVELOPMENT ORDINANCE IS BEING REQUEST:
§123-38.B & C - TO PERMIT THE SITE CUBING TO BE CONSTRUCTED WITH BELGIUM BLOCK.

CONDITIONAL USE APPROVAL BY WILLISTOWN TOWNSHIP
TROUTBECK FARMS MINOR SUBDIVISION PLAN
DATED JUNE 14, 2019,

OWNERS
GERALD B. LUCAS, ILL, AND LILIAN C. CHANCE, EXECUTORS OF THE ESTATE OF LILIAN S. L. CHANCE ("ESTATE");
GERALD B. LUCAS AND LILIAN C. CHANCE F/KLA LILIAN CHANCE BARR, TRUSTEES UNDER THE LILIAN CHANCE FAMILY TRUST DATED 12/30/92 ("TRUST");

DEVELOPERS
TROUTBECK FARM DEVELOPERS, LLC ("TF DEVELOPERS").

DECISION AND ORDER CONDITIONS
THE DECISION AND ORDER GRANTS TO TF DEVELOPERS (REFERRED TO BELOW AS "APPLICANT"), ITS SUCCESSORS AND ASSIGNS, THE ESTATE AND THE TRUST (REFERRED TO COLLECTIVELY BELOW AS "OWNERS"), THEIR SUCCESSORS AND ASSIGNS, PERMISSION TO SUBDIVIDE THE PROPERTY FOR TWO CONVENTIONAL LOTS ALONG WITH A THIRD LOT (THE "CONDITIONAL USE APPROVAL") SUBJECT TO CERTAIN CONDITIONS WHICH ARE SET FORTH IN THE DECISION AND ORDER (THE "CONDITIONS"):

1. THE IMPERVIOUS SURFACES ON LOTS 1, 2 AND 3 AS SHOWN AS THE LIGHT GRAY AREAS ON THE COLOR RENDERING SHALL BE REMOVED. THE PLAN SHALL NOT BE RECORDED UNTIL THE IMPERVIOUS SURFACES ARE EITHER REMOVED TO THE SATISFACTION OF THE TOWNSHIP, OR THEIR REMOVAL IS FINANCIALLY SECURED IN AMOUNTS SATISFACTORY TO THE TOWNSHIP ENGINEER AND IN ACCORDANCE WITH DEVELOPER AGREEMENTS SATISFACTORY TO THE TOWNSHIP SOLICITOR.

2. LOT 1 AND LOT 2 SHALL BE SUBJECT TO A RECORDED CONSERVATION EASEMENT IN A FORM SATISFACTORY TO THE TOWNSHIP SOLICITOR, WHICH (1) PRESERVES THE HISTORIC STRUCTURES INCLUDING THEIR FACADES SHOWN IN DARK BROWN ON THE COLOR RENDERING; (2) PRESERVES THE WOODED AND GRASS AREAS SHOWN AS DARK GREEN AND MEDIUM GREEN AND LOCATED WITHIN THE HISTORIC CONSERVATION AREA ON THE COLOR RENDERING; (3) REQUIRES THE REMOVAL OF THE EXISTING IMPERVIOUS AREAS AS SHOWN AS LIGHT GRAY ON THE COLOR RENDERING; (4) PROHIBITS THE ADDITION OF ANY ADDITIONAL IMPERVIOUS AREA WITHIN THE HISTORIC CONSERVATION AREA; (5) PROHIBITS THE ADDITION OF ANY ADDITIONAL BUILDING COVERAGE WITHIN THE HISTORIC CONSERVATION AREA; AND (6) PRESERVES THE HISTORIC CONSERVATION AREA AS OPEN SPACE. THE CONSERVATION EASEMENT SHALL BE CONVEYED IN PERPETUITY TO A RECOGNIZED NONPROFIT CORPORATION ESTABLISHED FOR THAT PURPOSE, OR IN THE EVENT NO SUCH NONPROFIT CORPORATION IS WILLING TO ACCEPT THE CONSERVATION EASEMENT, TO THE WILLISTOWN TOWNSHIP LAND CONSERVATION AUTHORITY. THE COST AND EXPENSE TO THE HOLDER OF THE CONSERVATION EASEMENT TO PREPARE, DOCUMENT AND RECORD THE CONSERVATION EASEMENT, INCLUDING BUT NOT LIMITED TO SURVEYING, TITLE INSURANCE AND CLOSING COSTS, AND THE FUNDING OF THE ENDOWMENT TO BE PAID TO THE HOLDER, SHALL BE PAID BY THE APPLICANT. THE PLAN SHALL NOT BE APPROVED UNTIL THE APPLICANT SUBMITS A CONSERVATION EASEMENT ACCEPTABLE TO THE OWNERS AND THE TOWNSHIP, AND THE PLAN SHALL NOT BE RELEASED FOR RECORDING UNTIL THE CONSERVATION EASEMENT EXECUTED IN RECORDABLE FORM IS AVAILABLE FOR RECORDING ALONG WITH THE PLAN.

3. LOTS 1 AND 2 SHALL BE SERVED BY PUBLIC WATER AND PUBLIC SEWER, AT THE SOLE COST AND EXPENSE OF THE APPLICANT. THE APPLICANT SHALL SEEK AND OBTAIN SEWAGE PLANNING MODULE APPROVAL UNDER ACT 537 AS PART OF THE LAND DEVELOPMENT APPROVAL FOR THE PROPOSED DEVELOPMENT ON LOT 3. NOTHING IN THIS DECISION AND ORDER SHALL BE DEEMED TO CONSTITUTE A REPRESENTATION BY THE TOWNSHIP OF THE AVAILABILITY OF, OR RESERVATION OF, SEWAGE CAPACITY IN THE TOWNSHIP'S SEWER SYSTEM.

4. LOTS 1 AND 2 SHALL HAVE ACCESS SOLELY FROM MONUMENT ROAD VIA A SHARED DRIVEWAY AS SHOWN ON THE PLAN. THE PLAN SHALL NOT BE APPROVED UNTIL THE APPLICANT SUBMITS A SHARED DRIVEWAY AGREEMENT INCLUDING ANY NECESSARY CROSS-EASEMENTS, SATISFACTORY TO THE OWNERS AND THE TOWNSHIP, AND THE PLAN SHALL NOT BE RELEASED FOR RECORDING UNTIL THE SHARED DRIVEWAY AGREEMENT EXECUTED IN RECORDABLE FORM IS AVAILABLE FOR RECORDING AGAINST LOTS 1 AND 2 ALONG WITH THE PLAN.

5. THE APPLICANT SHALL PROVIDE THE TRAFFIC IMPACT STUDY, COMMUNITY IMPACT STUDY AND ENVIRONMENTAL IMPACT STUDY AS PART OF THE LAND DEVELOPMENT APPROVAL FOR THE PROPOSED DEVELOPMENT ON LOT 3.

6. THE APPLICANT SHALL EXECUTE AND PROVIDE TO THE TOWNSHIP A RECORDABLE, NOTARIZED COPY OF A MEMORANDUM CONTAINING A METES AND BOUNDS DESCRIPTION OF THE PROPERTY AND STIPULATING THE TERMS AND CONDITIONS OF THIS APPROVAL AND SHALL CONSENT TO THE RECORDING BY THE TOWNSHIP IN THE OFFICE OF THE RECORDER OF DEEDS OF CHESTER COUNTY WITHIN THIRTY (30) DAYS FOLLOWING EXPIRATION OF THE APPEAL PERIOD.

7. THE APPLICANT SHALL EXPRESS TO THE BOARD IN WRITING WITHIN FOURTEEN (14) DAYS OF THE DATE OF THIS DECISION AND ORDER, ITS AGREEMENT TO THE ABOVE CONDITIONS OR THE APPLICATION IS DENIED; THE BOARD EXPRESSLY FINDING AND CONCLUDING THAT THE APPLICATION IN THE ABSENCE OF COMPLIANCE WITH THE SAID CONDITIONS IS INCONSISTENT WITH THE OBJECTIVE CRITERIA SET FORTH IN THE APPLICABLE PROVISIONS OF THE ZONING ORDINANCE.

8. THE APPLICANT SHALL CAUSE THE OWNERS OF THE PROPERTY, INCLUDING THE OWNERS' SUCCESSOR(S) IN INTEREST TO THE PROPERTY, TO JOIN IN AND CONSENT TO THE IMPOSITION OF CONDITIONS NOS. 1, 2, 3 AND 4, IN A FORM SATISFACTORY TO THE TOWNSHIP SOLICITOR, INCLUDING BUT NOT LIMITED TO A STIPULATION BY THE OWNERS AGREEING TO EXECUTE IN RECORDABLE FORM THE REQUIRED CONSERVATION EASEMENT AND SHARED DRIVEWAY AGREEMENT, AGREEING TO THE REMOVAL OF THE IMPERVIOUS SURFACES SHOWN IN LIGHT GRAY ON LOTS 1 AND 2, AND ENSURING THAT THE HISTORIC STRUCTURES, WOODED AND GRASS AREAS AND OTHER FEATURES COMPRISING THE HISTORIC CONSERVATION AREA, WILL BE PRESERVED AND NOT BE SUBJECT TO DEMOLITION BY NEGLECT, PENDING THE EXECUTION AND RECORDATION OF THE CONSERVATION EASEMENT.

THIS MEMORANDUM FURTHER CONFIRMS THAT TF DEVELOPERS, THE TRUST AND THE ESTATE HAVE CONSENTED TO THE CONDITIONS SET FORTH ABOVE AND TO THE RECORDING OF THIS MEMORANDUM.

STIPULATION

PURSUANT TO CONDITION OF APPROVAL NO. 8, THE TRUST AND THE ESTATE AGREE TO EXECUTE IN RECORDABLE FORM THE CONSERVATION EASEMENT AND THE SHARED DRIVEWAY AGREEMENT WHICH WILL BE RECORDED CONTEMPORANEOUSLY WITH THE RECORDATION OF THE SUBDIVISION PLAN CONTEMPLATED UNDER THE DECISION AND ORDER.

DWELLING UNIT CALCULATIONS:
THE FOLLOWING IS A BREAKDOWN OF THE PARCEL YIELD CALCULATION USING THE PURSUANT SECTION 139-158 OF THE ZONING ORDINANCE AND SECTION 73.11-1 OF THE WILLISTOWN TOWNSHIP ENVIRONMENTAL PROTECTION ORDINANCE.

TOTAL TRACT AREA (ENTIRE TRACT)	**64.32 ACRES**
EXCLUDING THE FOLLOWING EXISTING AND PROPOSED RIGHT-OF-WAY (73-11.1.C.1):	
EXISTING ROADWAY RIGHT-OF-WAY	0.99 ACRES
EXISTING UTILITY EASEMENT	0.30 ACRES
PROPOSED ACCESS EASEMENT	0.21 ACRES
PROPOSED SANITARY SEWER EASEMENT	0.17 ACRES
PROPOSED ROAD RIGHT-OF-WAY	3.01 ACRES
BASE DEVELOPMENT AREA	**59.64 ACRES**
EXCLUDING THE FOLLOWING EXISTING IMPROVEMENT/FEATURES (73-11.1.C.2):	
(1) FLOOD PLAIN/FLOOD WAY	0.00 ACRES
(2) WETLAND	1.06 ACRES
(3) RIPARIAN BUFFER (EXCLUSIVE OF 1 & 2)	9.14 ACRES
(4) SEVERE SLOPE (25% OR MORE)	0.67 ACRES
(5) 50% OF MODERATE SLOPE (15-25%+) (EXCLUSIVE OF 1, 2, 3 & 6)	1.10 ACRES
(6) 75% OF WOODLAND (EXCLUSIVE OF 1, 2, 5)	11.86 ACRES
(7) 50% OF HYDRIC SOIL (EXCLUSIVE OF 1, 2, 3, 4 & 6)	0.20 ACRES
TOTAL FEATURE AREA	24.03 ACRES
TOTAL PROTECTED FEATURE AREA	**20.42 ACRES**
NET TRACT AREA	39.23 ACRES
LOTS PERMITTED	39 LOTS
LOTS PROPOSED	36 LOTS
(MINOR SUBDIVSION - FARMSTEAD LOTS)	2 LOTS
(TROUTBECK FARMS DEVELOPMENT)	34 LOTS

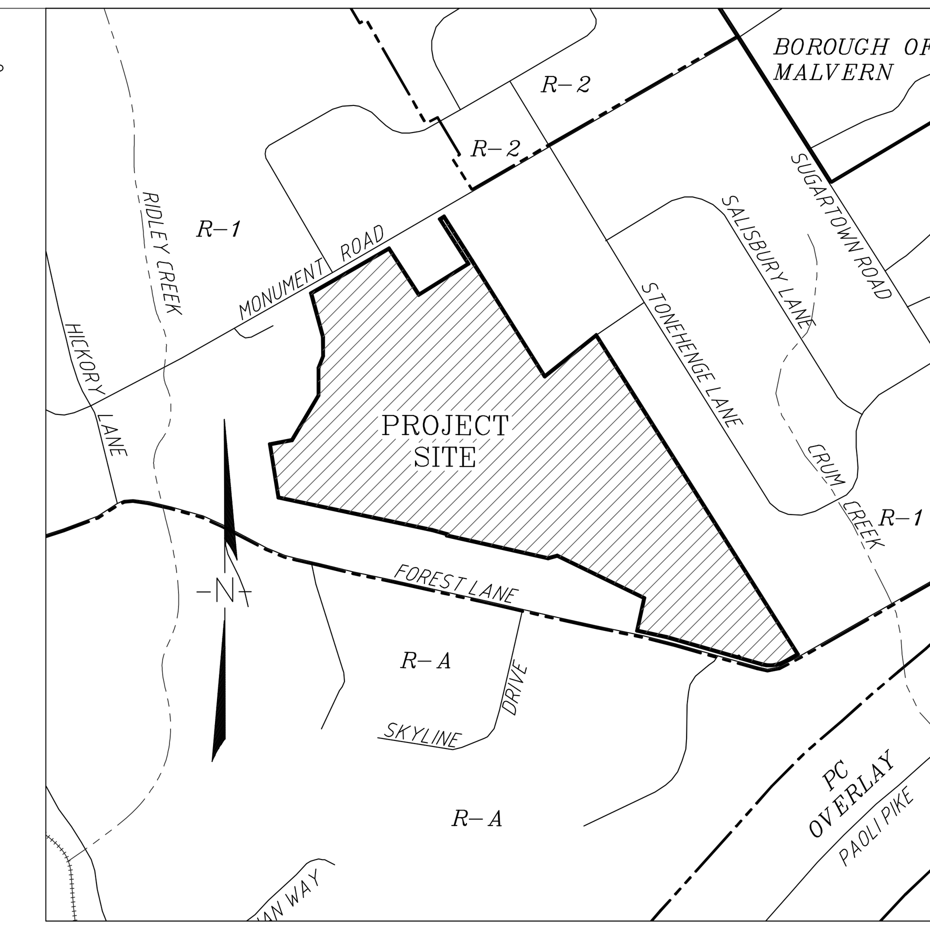

VICINITY MAP
1"=800'

APPLICANT AND EQUITABLE OWNER:
TROUTBECK FARM DEVELOPERS LLC
1171 LANCASTER AVE. SUITE 201
BERWYN PA 19312

RECORD OWNER:
LILIAN S. CHANCE FAMILY TRUST
730 MONUMENT ROAD
MALVERN, PA

SOURCE OF TITLE:

TOTAL DEVELOPMENT BOUNDARY SHOWN HEREON IS BASED ON THE "TROUTBECK FARMS - MINOR SUBDIVISION" LOT CONSOLIDATION PLAN.

UPI # 54-2-41	R.B.V. 3907 , P. 2120
UPI # 54-2-41.3	R.B.V. 6048 , P. 468
UPI # 54-2-41.3E	R.B.V. 6048 , P. 468
UPI # 54-2-41.6	R.B.V. 6557 , P. 2053
UPI # 54-2-85	R.B.V. 3430 , P. 463 , R.B.V. 3686 , P. 1139, R.B.V. 3973 , P. 1159 R.B.V. 4125 , P. 160 , R.B.V. 4282 , P. 653 , R.B.V. 7328 , P. 1143 R.B.V. 7334 , P. 1516 , R.B.V. 7559 , P. 1612, R.B.V. 7570 , P. 1313
UPI # 54-2-41.3A	R.B.V. 4875 , P. 2249

DATUM:
CONCRETE MONUMENT LOCATED ON THE WESTERN END OF THE NORTHERN RIGHT-OF-WAY LINE OF FRIARSHEEL LANE
ELEV.: 537.18

SCOPE:
OPEN SPACE DEVELOPMENT

TOTAL UNITS:	34 SINGLE FAMILY LOTS
TOTAL AREA:	61.77 ACRES
PROPOSED DENSITY:	0.55 UNITS/ACRE
WATER SERVICE:	PUBLIC
SEWER SERVICE:	PUBLIC

ZONING DATA TABULATION
RESIDENTIAL DISTRICT (R-1)

LOT AREA	1 ACRE
LOT WIDTH	150 FT. (AT BUILDING LINE) 100 FT. (AT STREET LINE) 50 FT. (AT STREET LINE - WITHIN CUL-DE-SAC)
FRONT YARD	60 FT. FROM RIGHT-OF-WAY
SIDE YARD	30 FT. MINIMUM 65 FT. AGGREGATE
REAR YARD	40 FT.
BUILDING HEIGHT	35 FT.
MAX. BLDG. COVERAGE	15 %
MAX. IMP. COVERAGE	20 %

OPEN SPACE CONSERVATION DISTRICT (OSC)

LOT AREA	15,000 SQ.FT. MINIMUM 1 ACRE MAXIMUM
LOT WIDTH	75 FT.
FRONT YARD	25 FT. FROM RIGHT-OF-WAY
SIDE YARD	10 FT. MINIMUM 25 FT. AGGREGATE
REAR YARD	25 FT.
BUILDING HEIGHT	35 FT.
MAX. BLDG. COVERAGE	20 %
MAX. IMP. COVERAGE	30 % (< 1/2 ACRE) 25% (1/2 ACRE - 1 ACRE) 20% (> 1 ACRE)

OPEN SPACE CALCULATIONS:
THE FOLLOWING IS A BREAKDOWN OF THE OPEN SPACE CALCULATIONS PURSUANT SECTION 139-154 OF THE WILLISTOWN TOWNSHIP ZONING ORDINANCE.

DEVELOPMENT AREA	- 63.34 ACRES
PROPOSED OPEN SPACE	- 47.50 ACRES (75%)
WETLAND AND SEVERE SLOPE (25% OR MORE) WITHIN OPEN SPACE	-1.68 ACRES (3.5%)
PRESERVED WOODLAND AREA	
EXISTING WOODLANDS	- 13.69 ACRES
PRESERVED WOODLANDS	- 11.37 ACRES (83%)

PLAN SET INDEX

COVER SHEET	17032-P-D-1.0	1 OF 25
OVERALL SUBDIVISION PLAN	17032-P-D-2.0	2 OF 25
SUBDIVISION PLAN	17032-P-D-2.1	3 OF 25
SUBDIVISION PLAN	17032-P-D-2.2	4 OF 25
SUBDIVISION PLAN	17032-P-D-2.3	5 OF 25
EXISTING CONDITIONS AND NATURAL RESOURCES PLAN	17032-P-D-3.0	6 OF 25
GRADING PLAN	17032-P-D-4.0	7 OF 25
GRADING PLAN	17032-P-D-4.1	8 OF 25
OPEN SPACE MANAGEMENT PLAN	17032-P-D-5.0	9 OF 25
PROFILE - WALNUT TREE LANE (0+00 - 14+00)	17032-P-D-6.0	10 OF 25
PROFILE - WALNUT TREE LANE (14+00 - 26+00)	17032-P-D-6.1	11 OF 25
PROFILE - KINGFISHER LANE & FRAIRSHEEL LANE	17032-P-D-6.2	12 OF 25
PROFILE - OVERLAND SANITARY SEWER	17032-P-D-6.3	13 OF 25
PROFILE - UTILITY PROFILES	17032-P-D-6.4	14 OF 25
EROSION AND SEDIMENT CONTROL PLAN	17032-P-D-7.0	15 OF 25
EROSION AND SEDIMENT CONTROL PLAN	17032-P-D-7.1	16 OF 25
EROSION AND SEDIMENT CONTROL PLAN	17032-P-D-7.2	17 OF 25
E&SC DETAILS & NOTES SHEET	17032-P-D-7.3	18 OF 25
E&SC DETAILS SHEET	17032-P-D-7.4	19 OF 25
POST-CONSTRUCTION STORM WATER MANAGEMENT PLAN	17032-P-D-8.0	20 OF 25
POST-CONSTRUCTION STORM WATER MANAGEMENT PLAN	17032-P-D-8.1	21 OF 25
POST-CONSTRUCTION STORM WATER MANAGEMENT PLAN	17032-P-D-8.2	22 OF 25
PCSM DETAILS SHEET	17032-P-D-8.3	23 OF 25
PCSM DETAILS & NOTES SHEET	17032-P-D-8.4	24 OF 25
CONSTRUCTION DETAILS SHEET	17032-P-D-9.0	25 OF 25

SUPPLEMENTAL PLANS
LANDSCAPING PLANS (PREPARED BY ORSATTI AND STUART) (DATED OCTOBER 21, 2019, LAST REVISED DECEMBER 20, 2019) LP-1 - LP-5

CERTIFICATE OF OWNERSHIP

COMMONWEALTH OF PENNSYLVANIA
COUNTY OF CHESTER

ON THIS ___ THE DAY OF ______________________, 20_____ ,BEFORE ME THE UNDERSIGNED OFFICER, PERSONALLY APPEARED ______________________ WHO ACKNOWLEDGED THEMSELVES TO BE OWNER OF PROPERTY SHOWN ON THIS PLAN, THAT THEY ACKNOWLEDGE ITS ACT AND DESIRES THE SAME TO BE RECORDED AS SUCH ACCORDING TO LAW.

OWNER NOTARY

CERTIFICATE OF REVIEW - PLANNING COMMISSION

REVIEWED BY THE PLANNING COMMISSION OF WILLISTOWN TOWNSHIP, CHESTER COUNTY, PENNSYLVANIA, THIS ______ DAY OF ______________________________, 20________.

SECRETARY

CHESTER COUNTY RECORDER OF DEEDS

RECORDED IN THE OFFICE OF THE RECORDER OF DEEDS OF CHESTER COUNTY AT WEST CHESTER, PENNSYLVANIA, IN PLAN BOOK ________ PAGE ________, ON THE ______ DAY OF ______________________________, 20________.

(DEPUTY) RECORDER OF DEEDS

CERTIFICATE OF ACCURACY - SURVEY

I HEREBY CERTIFY THAT, TO THE BEST OF MY KNOWLEDGE, ALL SURVEY INFORMATION AND COMPUTATIONS SHOWN AND DESCRIBED HEREON ARE TRUE AND CORRECT TO THE ACCURACY REQUIRED BY WILLISTOWN TOWNSHIP SUBDIVISION AND LAND DEVELOPMENT ORDINANCE, (BOUNDARY LINES CLOSE WITH AN ERROR OF LESS THAN ONE FOOT IN 10,000 FEET).

ROGER FRY, PLS LIC NO. SU-28835-E

DATE

TOWNSHIP ENGINEER

REVIEWED BY THE WILLISTOWN TOWNSHIP TOWNSHIP ENGINEER, THIS ______ DAY OF ______________________________, 20________.

TOWNSHIP ENGINEER NOTARY

CERTIFICATE OF MUNICIPAL APPROVAL - BOARD OF SUPERVISORS

APPROVED BY THE BOARD OF SUPERVISORS OF WILLISTOWN TOWNSHIP, CHESTER COUNTY, PENNSYLVANIA, THIS ______ DAY OF ______________________________, 20________.

CHAIRMAN

VICE CHAIRMAN MEMBER

CHESTER COUNTY PLANNING COMMISSION

REVIEWED BY THE CHESTER COUNTY PLANNING COMMISSION THIS ______ DAY OF ______________________________, 20________.

SECRETARY

CERTIFICATE OF ACCURACY

THESE PLANS ARE PREPARED IN ACCORDANCE WITH THE APPLICABLE REQUIREMENTS OF THE COMMONWEALTH OF PENNSYLVANIA, CHESTER COUNTY, AND WILLISTOWN TOWNSHIP

MICHAEL DUAIN HARTMAN, P.E. LIC. NO. PE059897

DATE

Revision	Date	Description	Rev.By
4	2/5/20	REVISED PER TOWNSHIP COMMENTS	MDH
3	12/20/19	REVISED PER TOWNSHIP COMMENTS	MDH
2	10/23/19	REVISED PER TOWNSHIP COMMENTS	MDH
1	7/24/19	REVISED PER TOWNSHIP COMMENTS	MDH

THIS DOCUMENT AND ALL INFORMATION AND WORK PRODUCT REPRESENTED BY AND CONTAINED HEREIN, IS THE SOLE AND EXCLUSIVE PROPERTY OF DH ENTERPRISES, INC. THE INFORMATION CONTAINED HEREIN IS LICENSED ONLY FOR LIMITED USE BY THE INTENDED RECIPIENT, AND NO LICENSE, PERMISSION OR AUTHORITY IS EXTENDED DIRECTLY OR IMPLIED, TO ANY PARTY WITHOUT THE EXPRESS WRITTEN PERMISSION OF DH ENTERPRISES, INC. COPYRIGHT, 2019, DH ENTERPRISES. ALL RIGHTS RESERVED

DH Enterprises
a civil engineering design & management firm
2815 PENN AVENUE
WEST LAWN, PA
610-927-4242

SEAL:
COMMONWEALTH OF PENNSYLVANIA
REGISTERED PROFESSIONAL
MICHAEL DUAIN HARTMAN
ENGINEER
No. PE059897

"TROUTBECK FARMS"
PRELIMINARY PLAN
COVER SHEET

CLIENT: MOSER CONSTRUCTION MANAGEMENT, LLC.
LOCATION: WILLISTOWN TOWNSHIP, CHESTER COUNTY, PENNSYLVANIA
DATE: JUNE 1, 2018

DRAWN BY: M.D.HARTMAN
PROJ. MANAGER: M.D.HARTMAN
SCALE: ---
SHEET: 1 of 25
PLAN NO. 17032-P-D-1.0

GRAPHIC SCALE 1"=100'

100 0 100 200 300

LOT AREA TABLE			
PARCEL #	GROSS LOT AREA	ALLOWABLE BUILDING AREA	ALLOWABLE IMPERVIOUS AREA
1	15,517 SQ. FT.	3,103 SQ. FT.	4,655 SQ. FT.
2	16,338 SQ. FT.	3,268 SQ. FT.	4,901 SQ. FT.
3	16,310 SQ. FT.	3,262 SQ. FT.	4,893 SQ. FT.
4	15,649 SQ. FT.	3,130 SQ. FT.	4,695 SQ. FT.
5	15,387 SQ. FT.	3,077 SQ. FT.	4,616 SQ. FT.
6	15,408 SQ. FT.	3,082 SQ. FT.	4,622 SQ. FT.
7	15,693 SQ. FT.	3,139 SQ. FT.	4,708 SQ. FT.
8	15,414 SQ. FT.	3,083 SQ. FT.	4,624 SQ. FT.
9	15,411 SQ. FT.	3,082 SQ. FT.	4,623 SQ. FT.
10	15,262 SQ. FT.	3,052 SQ. FT.	4,579 SQ. FT.
11	15,354 SQ. FT.	3,071 SQ. FT.	4,606 SQ. FT.
12	15,354 SQ. FT.	3,071 SQ. FT.	4,606 SQ. FT.
13	15,354 SQ. FT.	3,071 SQ. FT.	4,606 SQ. FT.
14	15,361 SQ. FT.	3,072 SQ. FT.	4,608 SQ. FT.
15	15,324 SQ. FT.	3,065 SQ. FT.	4,597 SQ. FT.
16	15,286 SQ. FT.	3,057 SQ. FT.	4,586 SQ. FT.
17	15,798 SQ. FT.	3,160 SQ. FT.	4,740 SQ. FT.
18	15,360 SQ. FT.	3,072 SQ. FT.	4,608 SQ. FT.
19	15,383 SQ. FT.	3,077 SQ. FT.	4,615 SQ. FT.
20	15,322 SQ. FT.	3,064 SQ. FT.	4,596 SQ. FT.
21	15,322 SQ. FT.	3,064 SQ. FT.	4,596 SQ. FT.
22	15,342 SQ. FT.	3,068 SQ. FT.	4,603 SQ. FT.
23	15,781 SQ. FT.	3,156 SQ. FT.	4,734 SQ. FT.
24	16,308 SQ. FT.	3,262 SQ. FT.	4,893 SQ. FT.
25	16,243 SQ. FT.	3,249 SQ. FT.	4,873 SQ. FT.
26	15,915 SQ. FT.	3,183 SQ. FT.	4,775 SQ. FT.
27	15,375 SQ. FT.	3,075 SQ. FT.	4,613 SQ. FT.
28	15,531 SQ. FT.	3,106 SQ. FT.	4,659 SQ. FT.
29	15,382 SQ. FT.	3,076 SQ. FT.	4,615 SQ. FT.
30	15,428 SQ. FT.	3,086 SQ. FT.	4,628 SQ. FT.
31	15,455 SQ. FT.	3,091 SQ. FT.	4,637 SQ. FT.
32	15,179 SQ. FT.	3,036 SQ. FT.	4,554 SQ. FT.
33	15,410 SQ. FT.	3,082 SQ. FT.	4,623 SQ. FT.
34	15,475 SQ. FT.	3,095 SQ. FT.	4,643 SQ. FT.

LEGEND

- EXISTING LIGHT STANDARD
- EXISTING CURB
- PROPOSED CURB
- SOIL LINE
- RIPARIAN BUFFER
- W-C7 W-C8 W-C9 WETLAND DELINEATION
- EXISTING WETLANDS
- SLANTED TEXT EXISTING STREET SIGN / EXISTING FEATURES ARE LABELED WITH SLANTED TEXT
- EXISTING DECIDUOUS TREE
- EXISTING CONIFEROUS TREE
- EXISTING EDGE OF WOODS
- PROPOSED CONCRETE MONUMENT
- PROPOSED IRON PIN (TYP.)

Revision	Date	Description	Rev. By
4	2/5/20	REVISED PER TOWNSHIP COMMENTS	MDH
3	12/20/19	REVISED PER TOWNSHIP COMMENTS	MDH
2	10/23/19	REVISED PER TOWNSHIP COMMENTS	MDH
1	7/24/19	REVISED PER TOWNSHIP COMMENTS	MDH

THIS DOCUMENT AND ALL INFORMATION AND WORK PRODUCT REPRESENTED BY AND CONTAINED HEREON, IS THE SOLE AND EXCLUSIVE PROPERTY OF DH ENTERPRISES, INC. THE INFORMATION CONTAINED HEREON IS LICENSED ONLY FOR LIMITED USE BY THE INTENDED OWNER, AS DEFINED IN THE PROFESSIONAL SERVICES AGREEMENT BETWEEN THE OWNER AND DH ENTERPRISES, INC. ANY OTHER USE OR REPRODUCTION BY ANY PARTY WITHOUT THE EXPRESS WRITTEN PERMISSION OF DH ENTERPRISES, INC. COPYRIGHT, 2019, DH ENTERPRISES. ALL RIGHTS RESERVED.

2815 PENN AVENUE
WEST LAWN, PA
610-927-4242

DH Enterprises
a civil engineering design & management firm

SEAL: COMMONWEALTH OF PENNSYLVANIA REGISTERED PROFESSIONAL MICHAEL DUAIN HARTMAN ENGINEER No. PE059897

"TROUTBECK FARMS" PRELIMINARY PLAN OVERALL SUBDIVISION PLAN

CLIENT: MOSER CONSTRUCTION MANAGEMENT, LLC.
LOCATION: WILLISTOWN TOWNSHIP, CHESTER COUNTY, PENNSYLVANIA
DATE: JUNE 1, 2018

DRAWN BY: M.D.HARTMAN
PROJ MANAGER: M.D.HARTMAN
SCALE: 1" = 100'
SHEET: 2 of 25
PLAN NO: 17032-P-D-2.0

RIGHT-OF-WAY CURVE TABLE					
CURVE #	LENGTH	RADIUS	DELTA	CH. BEARING & DIST.
C1	3.59'	30.03'	006°50'25"	S54°34'38"W 3.58'
C2	32.40'	20.00'	092°49'43"	S04°44'21"W 28.97'
C11	31.66'	20.00'	090°41'23"	S82°31'12"E 28.45'
C12	310.05'	450.00'	039°28'35"	N71°52'24"E 303.95'
C13	28.55'	20.00'	081°47'12"	N50°43'06"E 26.19'
C14	228.45'	50.00'	261°47'12"	S39°16'54"E 75.59'
C15	282.49'	410.00'	039°28'35"	S71°52'24"W 276.93'
C16	31.80'	20.00'	091°05'55"	S06°35'09"W 28.55'
C25	30.20'	20.00'	086°30'51"	S85°35'29"E 27.41'
C26	33.96'	275.00'	007°04'32"	N54°41'29"E 33.94'

RIGHT-OF-WAY LINE TABLE		
LINE #	LENGTH	BEARING
L1	45.46'	S58° 00' 04"W
L3	80.00'	N73° 47' 10"W
L5	69.28'	N88° 23' 18"W

LOT CURVE TABLE				
CURVE #	LENGTH	RADIUS	DELTA	CH. BEARING & DIST.
C27	15.57'	2620.00'	000°20'25"	N41°30'17"W 15.57'
C28	125.00'	2620.00'	002°44'01"	N39°58'04"W 124.99'
C29	125.00'	2620.00'	002°44'01"	N37°14'03"W 124.99'
C30	125.00'	2620.00'	002°44'01"	N34°30'02"W 124.99'
C31	125.00'	2620.00'	002°44'01"	N31°46'02"W 124.99'
C32	123.86'	2620.00'	002°42'31"	N29°02'45"W 123.85'
C33	128.64'	2580.00'	002°51'24"	N29°07'12"W 128.63'
C34	125.00'	2580.00'	002°46'33"	N31°56'11"W 124.99'
C35	125.00'	2580.00'	002°46'33"	N34°42'44"W 124.99'
C36	125.00'	2580.00'	002°46'33"	N37°29'18"W 124.99'
C37	125.23'	2580.00'	002°46'52"	N40°16'00"W 125.22'
C38	163.56'	2620.00'	003°34'37"	S39°52'08"E 163.53'
C39	125.00'	2620.00'	002°44'01"	S36°42'49"E 124.99'
C40	125.00'	2620.00'	002°44'01"	S33°58'48"E 124.99'
C41	125.00'	2620.00'	002°44'01"	S31°14'47"E 124.99'
C42	100.06'	2620.00'	002°11'17"	S28°47'08"E 100.05'
C43	24.94'	2580.00'	000°33'14"	S27°58'07"E 24.94'
C44	125.00'	2580.00'	002°46'33"	S29°38'01"E 124.99'
C45	125.00'	2580.00'	002°46'33"	S32°24'34"E 124.99'
C46	41.08'	2580.00'	000°54'45"	S34°15'13"E 41.08'
C47	110.91'	2580.00'	002°49'55"	S35°56'29"E 110.90'
C48	21.44'	450.00'	002°43'48"	N53°30'00"E 21.44'
C49	107.38'	450.00'	013°40'17"	N61°42'03"E 107.12'
C50	107.38'	450.00'	013°40'17"	N75°22'20"E 107.12'
C51	73.86'	450.00'	009°24'13"	N86°54'35"E 73.77'
C52	59.46'	50.00'	068°07'56"	N43°53'27"E 56.01'
C53	29.49'	50.00'	033°47'23"	N85°08'53"W 29.06'
C54	69.28'	50.00'	079°23'39"	N28°33'22"W 63.87'
C55	58.08'	50.00'	066°33'06"	S44°25'01"W 54.87'
C56	12.15'	50.00'	013°55'08"	S84°39'08"W 12.12'
C57	29.90'	410.00'	004°10'41"	S89°31'21"W 29.89'
C58	151.09'	410.00'	021°06'50"	S76°52'36"W 150.24'
C59	101.50'	410.00'	014°11'04"	N59°13'39"E 101.24'
C60	100.21'	2580.00'	002°13'32"	S40°04'34"E 100.20'
C61	21.89'	2580.00'	000°29'10"	S41°25'55"E 21.89'
C62	140.22'	130.08'	061°45'50"	S72°34'41"E 133.53'
C63	6.28'	130.08'	002°46'01"	N75°09'23"E 6.28'
C64	113.72'	776.53'	008°23'26"	N69°34'39"E 113.62'
C65	14.69'	776.53'	001°05'02"	N64°50'25"E 14.69'
C66	65.67'	50.00'	075°14'48"	N41°56'34"E 61.05'
C67	50.00'	50.00'	057°17'45"	S79°47'09"E 47.94'
C68	30.47'	50.00'	034°54'55"	S25°40'49"E 30.00'
C69	50.00'	50.00'	057°17'45"	S20°25'30"W 47.94'
C70	65.67'	50.00'	075°14'48"	S86°41'47"W 61.05'
C71	5.04'	816.35'	000°21'13"	S64°28'31"W 5.04'
C72	124.90'	816.35'	008°45'59"	S69°02'07"W 124.78'
C73	5.05'	816.35'	000°21'17"	S73°35'44"W 5.05'
C74	121.01'	170.10'	040°45'36"	N85°50'50"W 118.47'
C75	68.68'	170.10'	023°07'59"	N53°54'02"W 68.21'
C76	1.89'	170.10'	000°38'16"	N42°00'54"W 1.89'

LEGEND

- EXISTING LIGHT STANDARD
- EXISTING CURB
- PROPOSED CURB
- SOIL LINE
- RIPARIAN BUFFER
- WETLAND DELINEATION (W-C7, W-C8, W-C9)
- EXISTING WETLANDS
- EXISTING STREET SIGN
- EXISTING FEATURES ARE LABELED WITH SLANTED TEXT (SLANTED TEXT)
- EXISTING DECIDUOUS TREE
- EXISTING CONIFEROUS TREE
- EXISTING EDGE OF WOODS
- PROPOSED CONCRETE MONUMENT
- PROPOSED IRON PIN (TYP.)

GRAPHIC SCALE 1"=50'

50 0 50 100 150

Revisor	Date	Description	Rev. By
4	2/5/20	REVISED PER TOWNSHIP COMMENTS	MDH
3	12/20/19	REVISED PER TOWNSHIP COMMENTS	MDH
2	10/23/19	REVISED PER TOWNSHIP COMMENTS	MDH
1	7/24/19	REVISED PER TOWNSHIP COMMENTS	MDH

THIS DOCUMENT AND ALL INFORMATION AND WORK PRODUCT REPRESENTED BY AND CONTAINED HEREON, IS THE SOLE AND EXCLUSIVE PROPERTY OF DH ENTERPRISES, INC. THE INFORMATION CONTAINED HEREIN IS LICENSED ONLY FOR LIMITED USE BY THE OWNER OF THE PROPERTY DESCRIBED HEREIN. ANY REPRODUCTION, DISTRIBUTION, OR DISCLOSURE TO ANY PARTY WITHOUT THE EXPRESS WRITTEN PERMISSION OF DH ENTERPRISES, INC. COPYRIGHT, 2019, DH ENTERPRISES, ALL RIGHTS RESERVED.

2815 PENN AVENUE
WEST LAWN, PA
610-927-4242

Enterprises

a civil engineering design & management firm

SEAL: COMMONWEALTH OF PENNSYLVANIA REGISTERED PROFESSIONAL MICHAEL DUAIN HARTMAN ENGINEER No. PE059857

"TROUTBECK FARMS" PRELIMINARY PLAN SUBDIVISION PLAN

CLIENT: MOSER CONSTRUCTION MANAGEMENT, LLC
LOCATION: WILLISTOWN TOWNSHIP, CHESTER COUNTY, PENNSYLVANIA
DATE: JUNE 1, 2018

DRAWN BY: M.D.HARTMAN
PROJ.MANAGER: M.D.HARTMAN
SCALE: 1" = 50'
SHEET: 3 of 25
PLAN NO: 17032-P-D-2.1

4	2/5/20	REVISED PER TOWNSHIP COMMENTS	MDH
3	12/20/19	REVISED PER TOWNSHIP COMMENTS	MDH
2	10/23/19	REVISED PER TOWNSHIP COMMENTS	MDH
1	7/24/19	REVISED PER TOWNSHIP COMMENTS	MDH
Revision	Date	Description	Rev.By

THIS DOCUMENT AND ALL INFORMATION AND WORK PRODUCT REPRESENTED BY AND CONTAINED HEREIN, IS THE SOLE AND EXCLUSIVE PROPERTY OF DH ENTERPRISES, INC. THE INFORMATION CONTAINED HEREIN IS LICENSED ONLY FOR LIMITED USE BY THE INTENDED RECIPIENT, AND NO LICENSE, PERMISSION OR AUTHORITY IS EXTENDED DIRECTLY OR IMPLIED, TO ANY PARTY WITHOUT THE EXPRESS WRITTEN PERMISSION OF DH ENTERPRISES, INC. COPYRIGHT, 2019, DH ENTERPRISES. ALL RIGHTS RESERVED

DH Enterprises
a civil engineering design & management firm
2815 PENN AVENUE
WEST LAWN, PA
610-927-4242

SEAL: COMMONWEALTH OF PENNSYLVANIA, REGISTERED PROFESSIONAL ENGINEER, MICHAEL DUAIN HARTMAN, No. PE059897

"TROUTBECK FARMS" PRELIMINARY PLAN SUBDIVISION PLAN

CLIENT: MOSER CONSTRUCTION MANAGEMENT, LLC.
LOCATION: WILLISTOWN TOWNSHIP, CHESTER COUNTY, PENNSYLVANIA
DATE: JUNE 1, 2018

DRAWN BY: M.D.HARTMAN
PROJ. MANAGER: M.D.HARTMAN
SCALE: 1" = 50'
SHEET: 4 of 25
PLAN NO. 17032-P-D-2.2

Revisor	Date	Description	Rev. By
4	2/5/20	REVISED PER TOWNSHIP COMMENTS	MDH
3	12/20/19	REVISED PER TOWNSHIP COMMENTS	MDH
2	10/23/19	REVISED PER TOWNSHIP COMMENTS	MDH
1	7/24/19	REVISED PER TOWNSHIP COMMENTS	MDH

THIS DOCUMENT AND ALL INFORMATION AND WORK PRODUCT REPRESENTED BY AND CONTAINED HEREIN, IS THE SOLE AND EXCLUSIVE PROPERTY OF DH ENTERPRISES, INC. THE INFORMATION CONTAINED HEREIN IS LICENSED ONLY FOR LIMITED USE BY THE INDIVIDUAL OR ENTITY TO WHOM IT IS ADDRESSED. THIS DOCUMENT MAY NOT BE REPRODUCED OR DISTRIBUTED TO ANY PARTY WITHOUT THE EXPRESS WRITTEN PERMISSION OF DH ENTERPRISES, INC. COPYRIGHT, 2019, DH ENTERPRISES. ALL RIGHTS RESERVED.

2815 PENN AVENUE
WEST LAWN, PA
610-927-4242

Enterprises
a civil engineering design & management firm

SEAL:
COMMONWEALTH OF PENNSYLVANIA
REGISTERED PROFESSIONAL
MICHAEL DUAIN HARTMAN
ENGINEER
No. PE059897

"TROUTBECK FARMS" PRELIMINARY PLAN SUBDIVISION PLAN

CLIENT: MOSER CONSTRUCTION MANAGEMENT, LLC
LOCATION: WILLISTOWN TOWNSHIP, CHESTER COUNTY, PENNSYLVANIA
DATE: JUNE 1, 2018

DRAWN BY: M.D.HARTMAN
PROJ MANAGER: M.D.HARTMAN
SCALE: 1" = 50'
SHEET: 5 of 25
PLAN NO: 17032-P-D-2.3

INFILTRATION TEST RESULTS

TEST AREA	DEPTH TO BEDROCK	DEPTH TO GROUNDWATER	INFILTRATION RATE (IN/HR)	EXISTING GRADE	TEST ELEVATION	PROBE ELEVATION
1	>100"	>100"	0.31	499.00	495.67	490.67
2	>132"	>132"	0.25	500.58	493.58	489.58
3	>156"	>156"	0.25	503.23	495.23	490.23
4	>88"	>88"	4.28	517.33	514.00	510.00
5	>70"	>70"	8.25	511.36	509.53	505.53
6	>100"	>100"	3.00	526.92	522.75	518.59
7	>107"	>107"	1.50	521.51	517.51	512.59
8	>102"	>102"	0.25	514.88	510.38	506.38
9	>114"	>58"	0.83	510.50	508.50	501.00
10	>108"	>91"	1.44	513.26	510.96	504.26
11	>108"	>108"	0.72	520.84	516.84	511.84
12	>96"	>96"	0.48	522.26	517.96	514.26
13	>108"	>108"	0.48	521.38	517.18	512.38
14	>90"	>90"	9.72	530.46	527.26	522.96
15	>96"	>96"	10.08	531.87	529.47	523.87
16	>102"	>102"	5.40	505.51	501.21	497.01
17	>104"	>101"	1.20	505.45	502.95	496.75
18	>48"	>48"	0.25	508.95	508.28	504.28

SENSITIVE RESOURCES (PER ORDINANCE REQUIREMENTS)

EXISTING NATURAL SENSITIVE RESOURCES	TOTAL AREA (AC.)	PROTECTED AREA (AC.)
WETLANDS	1.06	1.06
POND	0.40	0.40
RIPARIAN BUFFERS	10.22	10.22
STEEP SLOPES, 25%+	0.68	0.68
STEEP SLOPES, 15% - 25%	1.29	1.27
WOODLANDS	13.69	11.37*
HYDRIC SOILS	6.78	6.36

PROTECTED FEATURES LEGEND

- WATERBODIES
- WETLANDS
- RIPARIAN AREAS
- HYDRIC SOILS
- WOODLANDS
- STEEP SLOPES 15% - 25%
- STEEP SLOPES 25%+
- MINIMUM DISTRUBANCE

DEMOLITION NOTES

1. CONTRACTOR TO DEMOLISH ALL ITEMS NECESSARY TO CONSTRUCT PROPOSED BUILDING AND SITE FEATURES WHETHER OR NOT INDICATED IN THE CONSTRUCTION DOCUMENTS. ADEQUATE AND PROPER PROTECTION SHALL BE PROVIDED TO EXISTING FEATURES NOT BEING REMOVED.
2. EXCAVATIONS THAT ARE LEFT OPEN DURING THE DEMOLITION PROCESS SHALL BE COVERED OR FENCED OFF. THE AREA SHALL BE ADEQUATELY MARKED TO ENSURE WORKER AND PUBLIC SAFETY.
3. THE CONTRACTOR IS RESPONSIBLE FOR TERMINATING ALL APPLICABLE UTILITIES WHERE ITEMS ARE BEING REMOVED IN A SAFE AND CODE CONFORMING MANNER.
4. UNUSABLE MATERIALS AND RUBBISH SHALL BE IMMEDIATELY REMOVED FROM THE SITE. MATERIALS TO BE REUSED WILL BE STOCKPILED IN A SAFE AND SECURE LOCATION. MATERIAL THAT REQUIRES PROTECTION FROM THE WEATHER SHALL BE STORED IN A SECURE DRY LOCATION.
5. DAMAGE CAUSED TO EXISTING FEATURES DURING THE DEMOLITION PROCESS SHALL BE REPAIRED AND RESTORED TO PREDEMOLITION CONDITIONS. IF DAMAGE CANNOT BE REPAIRED ADEQUATELY THAN THE DAMAGED ITEM SHALL BE REPLACED AT THE CONTRACTOR'S EXPENSE.
6. COORDINATE ALL DEMOLITION WITH ARCHITECTURAL DRAWINGS.
7. FEATURES SHOWN IN BOLD INDICATE ITEMS THAT MUST AT A MINIMUM BE REMOVED. ALSO SEE NOTE 1.

VICINITY MAP

1"=800'

LEGEND

- EXISTING CURB
- 450 EXISTING CONTOURS
- 451.25 EXISTING SPOT ELEVATION
- SOIL LINE
- W-C7 W-C8 W-C9 RIPARIAN BUFFER / WETLAND DELINEATION
- EXISTING WETLANDS
- EXISTING STREET SIGN
- SLANTED TEXT EXISTING FEATURES ARE LABELED WITH SLANTED TEXT
- EXISTING DECIDUOUS TREE
- EXISTING CONIFEROUS TREE
- EXISTING EDGE OF WOODS
- (TBR) TO BE REMOVED
- S EXISTING SANITARY SEWER & MANHOLE
- W EXISTING WATER LINE & VALVE
- 15% - 25% SLOPES
- 25%+ SLOPES
- AREA OF WOODLAND DISTURBANCE
- EXISTING PAVING TO BE REMOVED

GRAPHIC SCALE 1"=100'

100 0 100 200 300

Revision	Date	Description	Rev. By
4	2/5/20	REVISED PER TOWNSHIP COMMENTS	MDH
3	12/20/19	REVISED PER TOWNSHIP COMMENTS	MDH
2	10/23/19	REVISED PER TOWNSHIP COMMENTS	MDH
1	7/24/19	REVISED PER TOWNSHIP COMMENTS	MDH

THIS DOCUMENT AND ALL INFORMATION AND WORK PRODUCT REPRESENTED BY AND CONTAINED HEREON, IS THE SOLE AND EXCLUSIVE PROPERTY OF DH ENTERPRISES, INC. THE INFORMATION CONTAINED HEREIN IS LICENSED ONLY FOR LIMITED USE BY THE PARTIES TO WHOM IT IS ISSUED. THE REPRODUCTION, DISTRIBUTION, OR USE OF THIS DOCUMENT BY ANY PARTY WITHOUT THE EXPRESS WRITTEN PERMISSION OF DH ENTERPRISES, INC. COPYRIGHT, 2019, DH ENTERPRISES. ALL RIGHTS RESERVED.

2815 PENN AVENUE
WEST LAWN, PA
610-927-4242

a civil engineering design & management firm

Enterprises

SEAL: COMMONWEALTH OF PENNSYLVANIA REGISTERED PROFESSIONAL MICHAEL DUAIN HARTMAN ENGINEER No. PE059897

"TROUTBECK FARMS"
PRELIMINARY PLAN
EXISTING CONDITIONS AND NATURAL RESOURCES PLAN

CLIENT: MOSER CONSTRUCTION MANAGEMENT, LLC
LOCATION: WILLISTOWN TOWNSHIP, CHESTER COUNTY, PENNSYLVANIA
DATE: JUNE 1, 2018

DRAWN BY: M.D.HARTMAN
PROJ. MANAGER: M.D.HARTMAN
SCALE: 1" = 100'
SHEET: 6 of 25
PLAN NO: 17032-P-D-3.0

Rev.	Date	Description	Rev. By
4	2/5/20	REVISED PER TOWNSHIP COMMENTS	MDH
3	12/20/19	REVISED PER TOWNSHIP COMMENTS	MDH
2	10/23/19	REVISED PER TOWNSHIP COMMENTS	MDH
1	7/24/19	REVISED PER TOWNSHIP COMMENTS	MDH

THIS DOCUMENT AND ALL INFORMATION AND WORK PRODUCT REPRESENTED BY AND CONTAINED HEREON, IS THE SOLE AND EXCLUSIVE PROPERTY OF DH ENTERPRISES, INC. THE INFORMATION CONTAINED HEREIN IS LICENSED ONLY FOR LIMITED USE BY THE PARTIES TO WHOM IT IS ISSUED. THE REPRODUCTION, DISTRIBUTION, OR USE OF THIS DOCUMENT BY ANY PARTY WITHOUT THE EXPRESS WRITTEN PERMISSION OF DH ENTERPRISES, INC. COPYRIGHT, 2019, DH ENTERPRISES. ALL RIGHTS RESERVED.

2815 PENN AVENUE
WEST LAWN, PA
610-927-4242

Enterprises
civil engineering design & management

SEAL:
COMMONWEALTH OF PENNSYLVANIA
REGISTERED PROFESSIONAL ENGINEER
MICHAEL DUAIN HARTMAN
No. PE059897

"TROUTBECK FARMS"
PRELIMINARY PLAN
GRADING AND UTILITY PLAN

CLIENT: MOSER CONSTRUCTION MANAGEMENT, LLC
LOCATION: WILLISTOWN TOWNSHIP, CHESTER COUNTY, PENNSYLVANIA
DATE: JUNE 1, 2018

DRAWN BY:	M.D.HARTMAN
PROJ.MANAGER:	M.D.HARTMAN
SCALE:	1" = 50'
SHEET:	7 of 25
PLAN NO:	17032-P-D-4.0

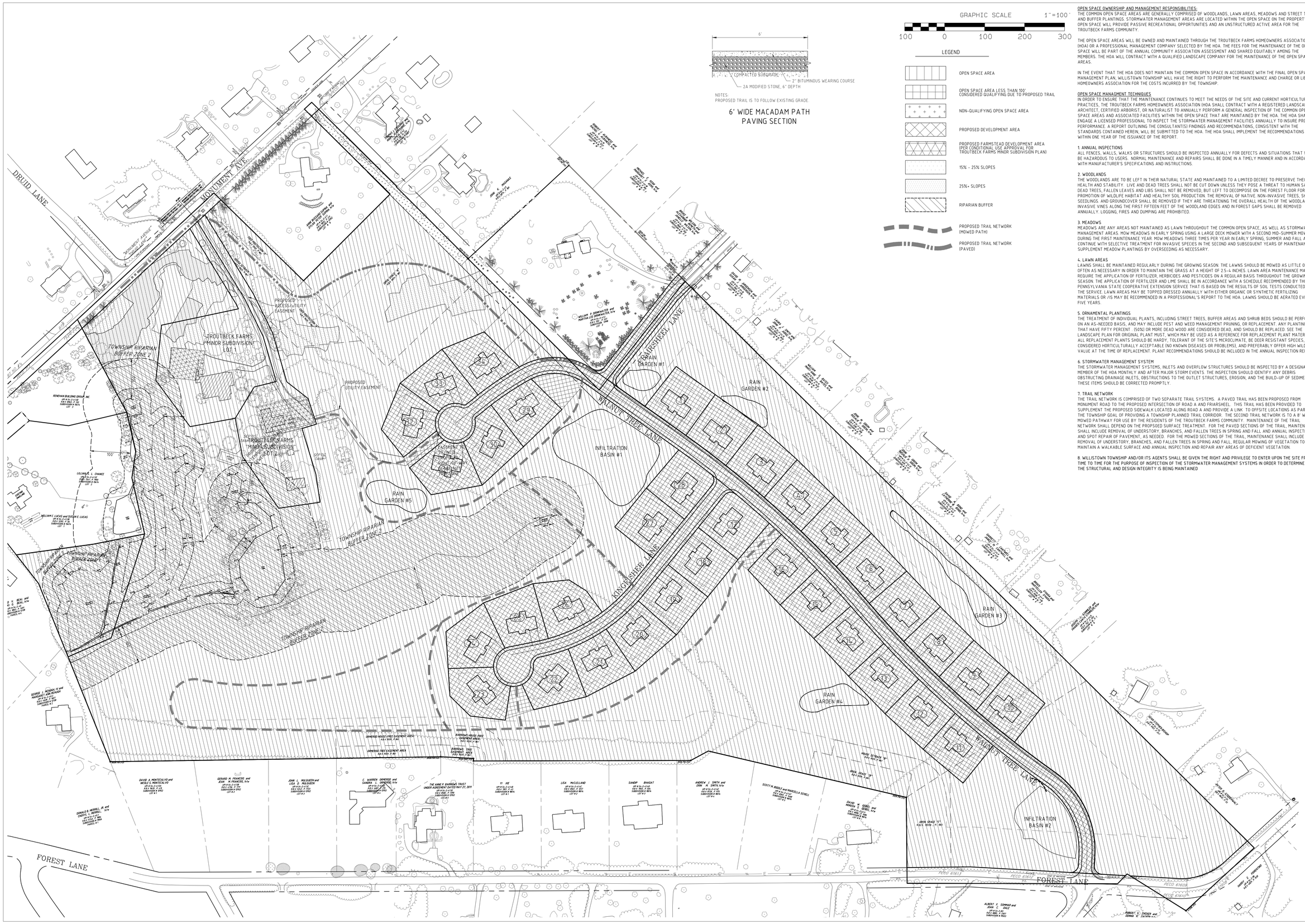

NOTES:
PROPOSED TRAIL IS TO FOLLOW EXISTING GRADE.

6' WIDE MACADAM PATH PAVING SECTION

GRAPHIC SCALE 1"=100'

100 0 100 200 300

LEGEND

- OPEN SPACE AREA
- OPEN SPACE AREA LESS THAN 100' CONSIDERED QUALIFYING DUE TO PROPOSED TRAIL
- NON-QUALIFYING OPEN SPACE AREA
- PROPOSED DEVELOPMENT AREA
- PROPOSED FARMSTEAD DEVELOPMENT AREA (PER CONDITIONAL USE APPROVAL FOR TROUTBECK FARMS MINOR SUBDIVISION PLAN)
- 15% - 25% SLOPES
- 25%+ SLOPES
- RIPARIAN BUFFER
- PROPOSED TRAIL NETWORK (MOWED PATH)
- PROPOSED TRAIL NETWORK (PAVED)

OPEN SPACE OWNERSHIP AND MANAGEMENT RESPONSIBILITIES:
THE COMMON OPEN SPACE AREAS ARE GENERALLY COMPRISED OF WOODLANDS, LAWN AREAS, MEADOWS AND STREET TREES AND BUFFER PLANTINGS. STORMWATER MANAGEMENT AREAS ARE LOCATED WITHIN THE OPEN SPACE ON THE PROPERTY. THE OPEN SPACE WILL PROVIDE PASSIVE RECREATIONAL OPPORTUNITIES AND AN UNSTRUCTURED ACTIVE AREA FOR THE TROUTBECK FARMS COMMUNITY.

THE OPEN SPACE AREAS WILL BE OWNED AND MAINTAINED THROUGH THE TROUTBECK FARMS HOMEOWNERS ASSOCIATION (HOA) OR A PROFESSIONAL MANAGEMENT COMPANY SELECTED BY THE HOA. THE FEES FOR THE MAINTENANCE OF THE OPEN SPACE WILL BE PART OF THE ANNUAL COMMUNITY ASSOCIATION ASSESSMENT AND SHARED EQUITABLY AMONG THE MEMBERS. THE HOA WILL CONTRACT WITH A QUALIFIED LANDSCAPE COMPANY FOR THE MAINTENANCE OF THE OPEN SPACE AREAS.

IN THE EVENT THAT THE HOA DOES NOT MAINTAIN THE COMMON OPEN SPACE IN ACCORDANCE WITH THE FINAL OPEN SPACE MANAGEMENT PLAN, WILLISTOWN TOWNSHIP WILL HAVE THE RIGHT TO PERFORM THE MAINTENANCE AND CHARGE OR LIEN THE HOMEOWNERS ASSOCIATION FOR THE COSTS INCURRED BY THE TOWNSHIP.

OPEN SPACE MANAGMENT TECHNIQUES
IN ORDER TO ENSURE THAT THE MAINTENANCE CONTINUES TO MEET THE NEEDS OF THE SITE AND CURRENT HORTICULTURAL PRACTICES, THE TROUTBECK FARMS HOMEOWNERS ASSOCIATION (HOA SHALL CONTRACT WITH A REGISTERED LANDSCAPE ARCHITECT, CERTIFIED ARBORIST, OR NATURALIST TO ANNUALLY PERFORM A GENERAL INSPECTION OF THE COMMON OPEN SPACE AREAS AND ASSOCIATED FACILITIES WITHIN THE OPEN SPACE THAT ARE MAINTAINED BY THE HOA. THE HOA SHALL ENGAGE A LICENSED PROFESSIONAL TO INSPECT THE STORMWATER MANAGEMENT FACILITIES ANNUALLY TO INSURE PROPER PERFORMANCE. A REPORT OUTLINING THE CONSULTANT(S) FINDINGS AND RECOMMENDATIONS, CONSISTENT WITH THE STANDARDS CONTAINED HEREIN, WILL BE SUBMITTED TO THE HOA. THE HOA SHALL IMPLEMENT THE RECOMMENDATIONS WITHIN ONE YEAR OF THE ISSUANCE OF THE REPORT.

1. ANNUAL INSPECTIONS
ALL FENCES, WALLS, WALKS OR STRUCTURES SHOULD BE INSPECTED ANNUALLY FOR DEFECTS AND SITUATIONS THAT WOULD BE HAZARDOUS TO USERS. NORMAL MAINTENANCE AND REPAIRS SHALL BE DONE IN A TIMELY MANNER AND IN ACCORDANCE WITH MANUFACTURER'S SPECIFICATIONS AND INSTRUCTIONS.

2. WOODLANDS
THE WOODLANDS ARE TO BE LEFT IN THEIR NATURAL STATE AND MAINTAINED TO A LIMITED DEGREE TO PRESERVE THEIR HEALTH AND STABILITY. LIVE AND DEAD TREES SHALL NOT BE CUT DOWN UNLESS THEY POSE A THREAT TO HUMAN SAFETY. DEAD TREES, FALLEN LEAVES AND LIBS SHALL NOT BE REMOVED, BUT LEFT TO DECOMPOSE ON THE FOREST FLOOR FOR PROMOTION OF WILDLIFE HABITAT AND HEALTHY SOIL PRODUCTION. THE REMOVAL OF NATIVE NON-INVASIVE TREES, SHRUBS, SEEDLINGS, AND GROUNDCOVER SHALL BE REMOVED IF THEY ARE THREATENING THE OVERALL HEALTH OF THE WOODLANDS. INVASIVE VINES ALONG THE FIRST FIFTEEN FEET OF THE WOODLAND EDGES AND IN FOREST GAPS SHALL BE REMOVED ANNUALLY. LOGGING, FIRES AND DUMPING ARE PROHIBITED.

3. MEADOWS
MEADOWS ARE ANY AREAS NOT MAINTAINED AS LAWN THROUGHOUT THE COMMON OPEN SPACE, AS WELL AS STORMWATER MANAGEMENT AREAS. MOW MEADOWS IN EARLY SPRING USING A LARGE DECK MOWER WITH A SECOND MID-SUMMER MOWING DURING THE FIRST MAINTENANCE YEAR. MOW MEADOWS THREE TIMES PER YEAR IN EARLY SPRING, SUMMER AND FALL AND CONTINUE WITH SELECTIVE TREATMENT FOR INVASIVE SPECIES IN THE SECOND AND SUBSEQUENT YEARS OF MAINTENANCE. SUPPLEMENT MEADOW PLANTINGS BY OVERSEEDING AS NECESSARY.

4. LAWN AREAS
LAWNS SHALL BE MAINTAINED REGULARLY DURING THE GROWING SEASON. THE LAWNS SHOULD BE MOWED AS LITTLE OR AS OFTEN AS NECESSARY IN ORDER TO MAINTAIN THE GRASS AT A HEIGHT OF 2.5-4 INCHES. LAWN AREA MAINTENANCE MAY REQUIRE THE APPLICATION OF FERTILIZER, HERBICIDES AND PESTICIDES ON A REGULAR BASIS THROUGHOUT THE GROWING SEASON. THE APPLICATION OF FERTILIZER AND LIME SHALL BE IN ACCORDANCE WITH A SCHEDULE RECOMMENDED BY THE PENNSYLVANIA STATE COOPERATIVE EXTENSION SERVICE THAT IS BASED ON THE RESULTS OF SOIL TESTS CONDUCTED BY THE SERVICE. LAWN AREAS MAY BE TOPPED DRESSED ANNUALLY WITH EITHER ORGANIC OR SYNTHETIC FERTILIZING MATERIALS OR /IS MAY BE RECOMMENDED IN A PROFESSIONAL'S REPORT TO THE HOA. LAWNS SHOULD BE AERATED EVERY FIVE YEARS.

5. ORNAMENTAL PLANTINGS
THE TREATMENT OF INDIVIDUAL PLANTS, INCLUDING STREET TREES, BUFFER AREAS AND SHRUB BEDS SHOULD BE PERFORMED ON AN AS-NEEDED BASIS, AND MAY INCLUDE PEST AND WEED MANAGEMENT PRUNING, OR REPLACEMENT. ANY PLANTINGS THAT HAVE FIFTY PERCENT (50%) OR MORE DEAD WOOD ARE CONSIDERED DEAD, AND SHOULD BE REPLACED. SEE THE LANDSCAPE PLAN FOR ORIGINAL PLANT MUST, WHICH MAY BE USED AS A REFERENCE FOR REPLACEMENT PLANT MATERIAL. ALL REPLACEMENT PLANTS SHOULD BE HARDY, TOLERANT OF THE SITE'S MICROCLIMATE, BE DEER RESISTANT SPECIES, BE CONSIDERED HORTICULTURALLY ACCEPTABLE (NO KNOWN DISEASES OR PROBLEMS), AND PREFERABLY OFFER HIGH WILDLIFE VALUE AT THE TIME OF REPLACEMENT. PLANT RECOMMENDATIONS SHOULD BE INCLUDED IN THE ANNUAL INSPECTION REPORT

6. STORMWATER MANAGEMENT SYSTEM
THE STORMWATER MANAGEMENT SYSTEMS, INLETS AND OVERFLOW STRUCTURES SHOULD BE INSPECTED BY A DESIGNATED MEMBER OF THE HOA MONTHLY AND AFTER MAJOR STORM EVENTS. THE INSPECTION SHOULD IDENTIFY ANY DEBRIS OBSTRUCTING DRAINAGE INLETS, OBSTRUCTIONS TO THE OUTLET STRUCTURES, EROSION, AND THE BUILD-UP OF SEDIMENT. THESE ITEMS SHOULD BE CORRECTED PROMPTLY.

7. TRAIL NETWORK
THE TRAIL NETWORK IS COMPRISED OF TWO SEPARATE TRAIL SYSTEMS. A PAVED TRAIL HAS BEEN PROPOSED FROM MONUMENT ROAD TO THE PROPOSED INTERSECTION OF ROAD A AND FRIARSHELL. THIS TRAIL HAS BEEN PROVIDED TO SUPPLEMENT THE PROPOSED SIDEWALK LOCATED ALONG ROAD A AND PROVIDE A LINK TO OFFSITE LOCATIONS AS PART OF THE TOWNSHIP GOAL OF PROVIDING A TOWNSHIP PLANNED TRAIL CORRIDOR. THE SECOND TRAIL NETWORK IS TO A 8' WIDE MOWED PATHWAY FOR USE BY THE RESIDENTS OF THE TROUTBECK FARMS COMMUNITY. MAINTENANCE OF THE TRAIL NETWORK SHALL DEPEND ON THE PROPSED SURFACE TREATMENT. FOR THE PAVED SECTIONS OF THE TRAIL, MAINTENANCE SHALL INCLUDE REMOVAL OF UNDERSTORY, BRANCHES, AND FALLEN TREES IN SPRING AND FALL AND ANNUAL INSPECTION AND SPOT REPAIR OF PAVEMENT, AS NEEDED. FOR THE MOWED SECTIONS OF THE TRAIL, MAINTENANCE SHALL INCLUDE REMOVAL OF UNDERSTORY, BRANCHES, AND FALLEN TREES IN SPRING AND FALL, REGULAR MOWING OF VEGETATION TO MAINTAIN A WALKABLE SURFACE AND ANNUAL INSPECTION AND REPAIR ANY AREAS OF DEFICIENT VEGETATION.

8. WILLISTOWN TOWNSHIP AND/OR ITS AGENTS SHALL BE GIVEN THE RIGHT AND PRIVILEGE TO ENTER UPON THE SITE FROM TIME TO TIME FOR THE PURPOSE OF INSPECTION OF THE STORMWATER MANAGEMENT SYSTEMS IN ORDER TO DETERMINE THAT THE STRUCTURAL AND DESIGN INTEGRITY IS BEING MAINTAINED

Revision	Date	Description	Rev. By
4	2/5/20	REVISED PER TOWNSHIP COMMENTS	MDH
3	12/20/19	REVISED PER TOWNSHIP COMMENTS	MDH
2	10/23/19	REVISED PER TOWNSHIP COMMENTS	MDH
1	7/24/19	REVISED PER TOWNSHIP COMMENTS	MDH

THIS DOCUMENT AND ALL INFORMATION AND WORK PRODUCT REPRESENTED BY AND CONTAINED HEREON, IS THE SOLE AND EXCLUSIVE PROPERTY OF DH ENTERPRISES, INC. THE INFORMATION CONTAINED HEREIN IS LICENSED ONLY FOR LIMITED USE BY THE PARTY TO WHOM IT IS ISSUED. THE REPRODUCTION, REPRINTING, REVISION, RECASTING OR ANY OTHER USE BY ANY PARTY WITHOUT THE EXPRESS WRITTEN PERMISSION OF DH ENTERPRISES, INC. COPYRIGHT, 2019, DH ENTERPRISES. ALL RIGHTS RESERVED.

2815 PENN AVENUE
WEST LAWN, PA
610-927-4242
Enterprises
a civil engineering design & management firm

SEAL:
COMMONWEALTH OF PENNSYLVANIA
REGISTERED PROFESSIONAL
MICHAEL DUAIN HARTMAN
ENGINEER
No. PE059897

"TROUTBECK FARMS" PRELIMINARY PLAN OPEN SPACE MANAGEMENT PLAN

CLIENT: MOSER CONSTRUCTION MANAGEMENT, LLC
LOCATION: WILLISTOWN TOWNSHIP, CHESTER COUNTY, PENNSYLVANIA
DATE: JUNE 1, 2018

DRAWN BY: M.D.HARTMAN
PROJ.MANAGER: M.D.HARTMAN
SCALE: 1" = 100'
SHEET: 9 of 25
PLAN NO: 17032-P-D-5.0

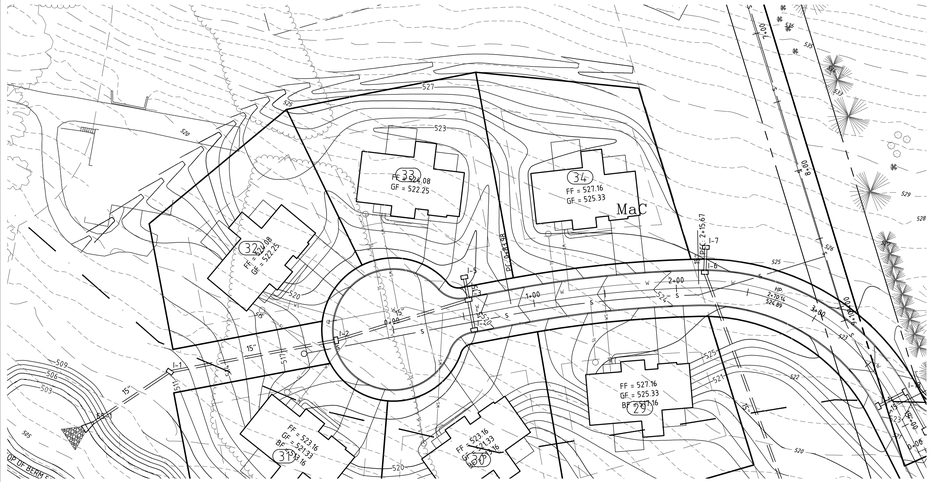

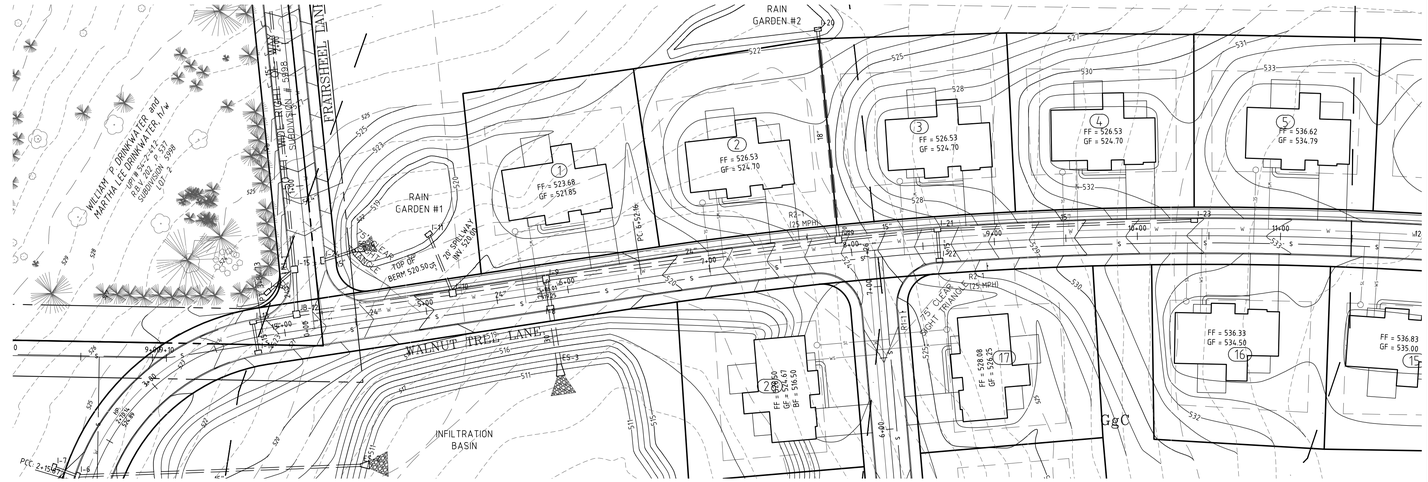

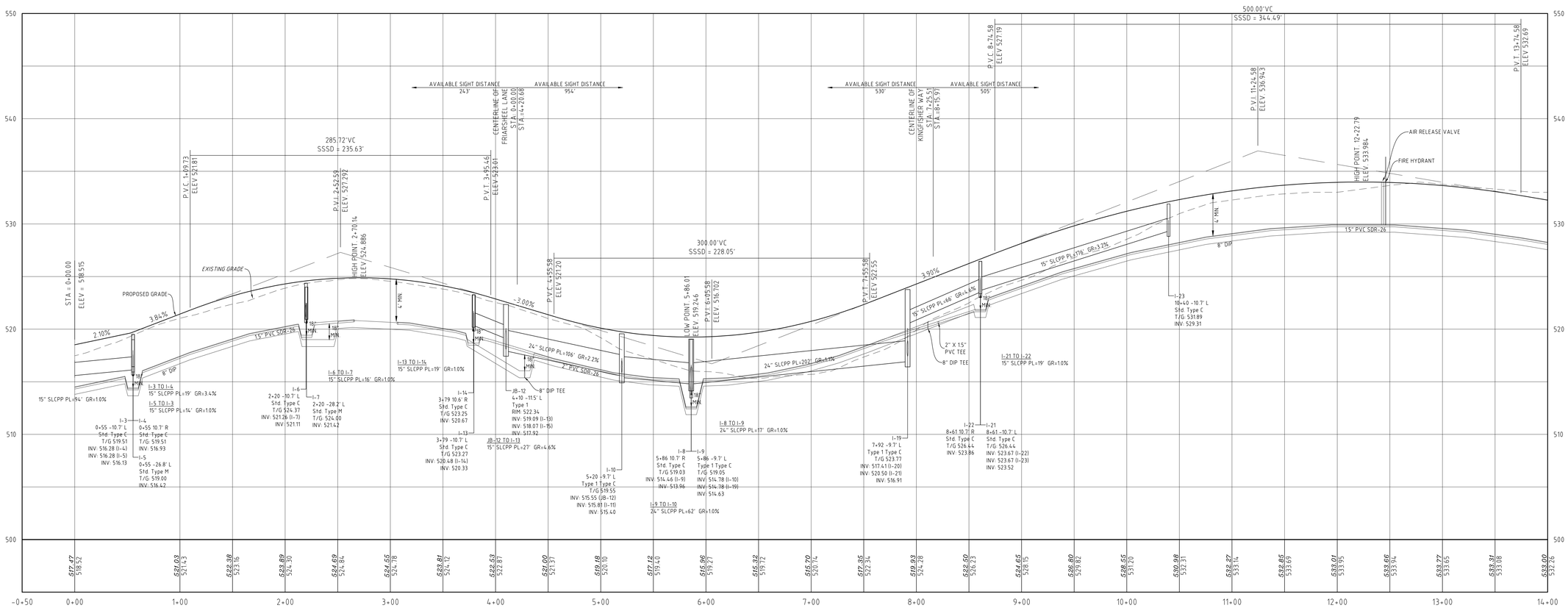

GRAPHIC SCALE 1"=50'

50 0 50 100 150

4	2/5/20	REVISED PER TOWNSHIP COMMENTS	MDH
3	12/20/19	REVISED PER TOWNSHIP COMMENTS	MDH
2	10/23/19	REVISED PER TOWNSHIP COMMENTS	MDH
1	7/24/19	REVISED PER TOWNSHIP COMMENTS	MDH
Revision	Date	Description	Rev. By

THIS DOCUMENT AND ALL INFORMATION AND WORK PRODUCT REPRESENTED BY AND CONTAINED HEREON, IS THE SOLE AND EXCLUSIVE PROPERTY OF DH ENTERPRISES, INC. THE INFORMATION CONTAINED HEREIN IS LICENSED ONLY FOR LIMITED USE BY THE PROJECT OWNER. ANY OTHER USE OR REPRODUCTION IS PROHIBITED WITHOUT THE EXPRESS WRITTEN PERMISSION OF DH ENTERPRISES, INC. COPYRIGHT, 2019, DH ENTERPRISES. ALL RIGHTS RESERVED.

2815 PENN AVENUE
WEST LAWN, PA
610-927-4242

Enterprises
a civil engineering design & management firm

SEAL:

COMMONWEALTH OF PENNSYLVANIA
REGISTERED PROFESSIONAL
MICHAEL DUAIN HARTMAN
ENGINEER
No. PE059897

"TROUTBECK FARMS"
PRELIMINARY PLAN
PROFILE - WALNUT TREE LANE (0+00 - 14+00)

CLIENT: MOSER CONSTRUCTION MANAGEMENT, LLC.
LOCATION: WILLISTOWN TOWNSHIP, CHESTER COUNTY, PENNSYLVANIA
DATE: JUNE 1, 2018

DRAWN BY: M.D.HARTMAN
PROJ. MANAGER: M.D.HARTMAN
SCALE: 1" = 50'
SHEET: 10 of 25
PLAN NO: 17032-P-D-6.0

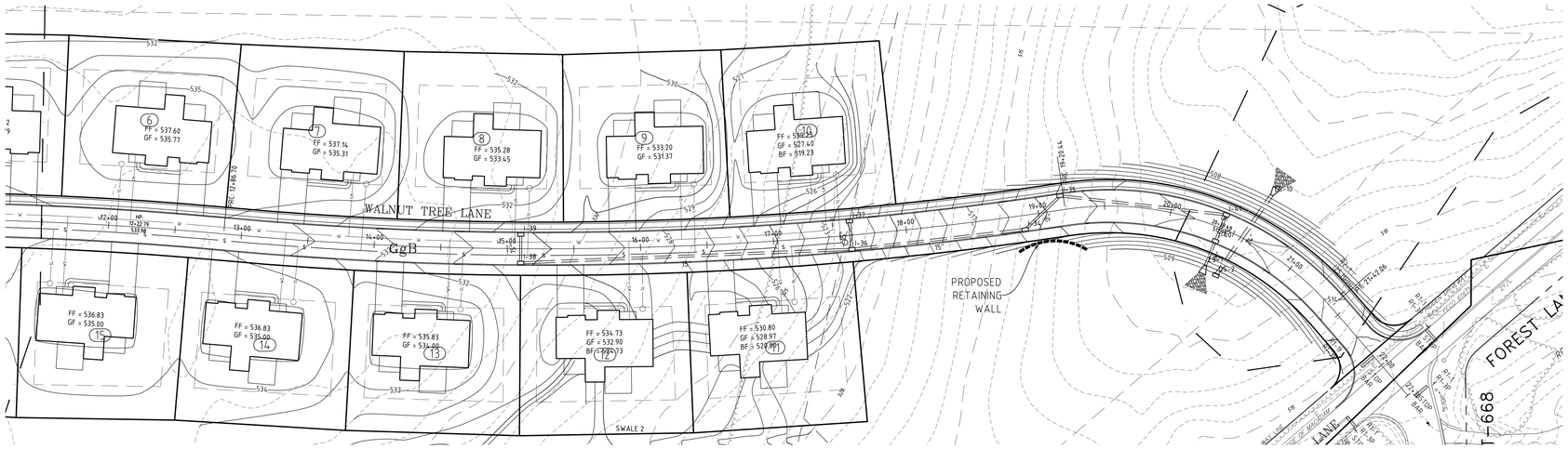

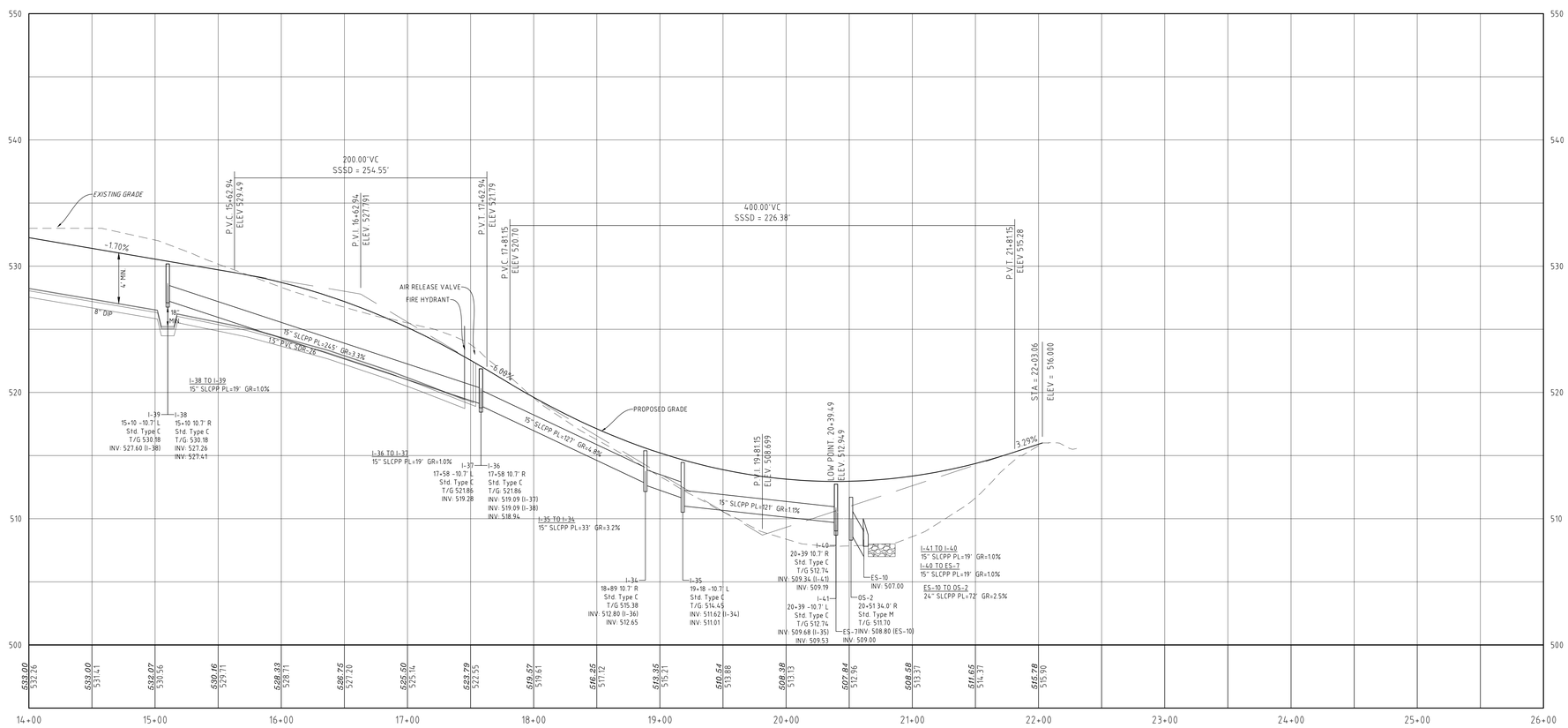

GRAPHIC SCALE 1"=50'

50 0 50 100 150

Rev.	Date	Description	By
4	2/5/20	REVISED PER TOWNSHIP COMMENTS	MDH
3	12/20/19	REVISED PER TOWNSHIP COMMENTS	MDH
2	10/23/19	REVISED PER TOWNSHIP COMMENTS	MDH
1	7/24/19	REVISED PER TOWNSHIP COMMENTS	MDH

THIS DOCUMENT AND ALL INFORMATION AND WORK PRODUCT REPRESENTED BY AND CONTAINED HEREIN, IS THE SOLE AND EXCLUSIVE PROPERTY OF DH ENTERPRISES, INC. THE INFORMATION CONTAINED HEREIN IS LICENSED ONLY FOR LIMITED USE BY THE PROJECT OWNER, AND NO OTHER PERSON OR ENTITY MAY REPRODUCE, DISTRIBUTE, OR OTHERWISE USE ANY PARTY WITHOUT THE EXPRESS WRITTEN PERMISSION OF DH ENTERPRISES, INC. COPYRIGHT, 2019, DH ENTERPRISES. ALL RIGHTS RESERVED.

2815 PENN AVENUE
WEST LAWN, PA
610-927-4242

Enterprises

a civil engineering design & management firm

SEAL:

COMMONWEALTH OF PENNSYLVANIA
REGISTERED PROFESSIONAL
MICHAEL DUAIN HARTMAN
ENGINEER
No. PE059897

"TROUTBECK FARMS"
PRELIMINARY PLAN
PROFILE - WALNUT TREE LANE (14+00 - 25+00)

CLIENT: MOSER CONSTRUCTION MANAGEMENT, LLC
LOCATION: WILLISTOWN TOWNSHIP, CHESTER COUNTY, PENNSYLVANIA
DATE: JUNE 1, 2018

DRAWN BY: M.D.HARTMAN
PROJ.MANAGER: M.D.HARTMAN
SCALE: 1" = 50'
SHEET: 11 of 25
PLAN NO: 17032-P-D-6.1

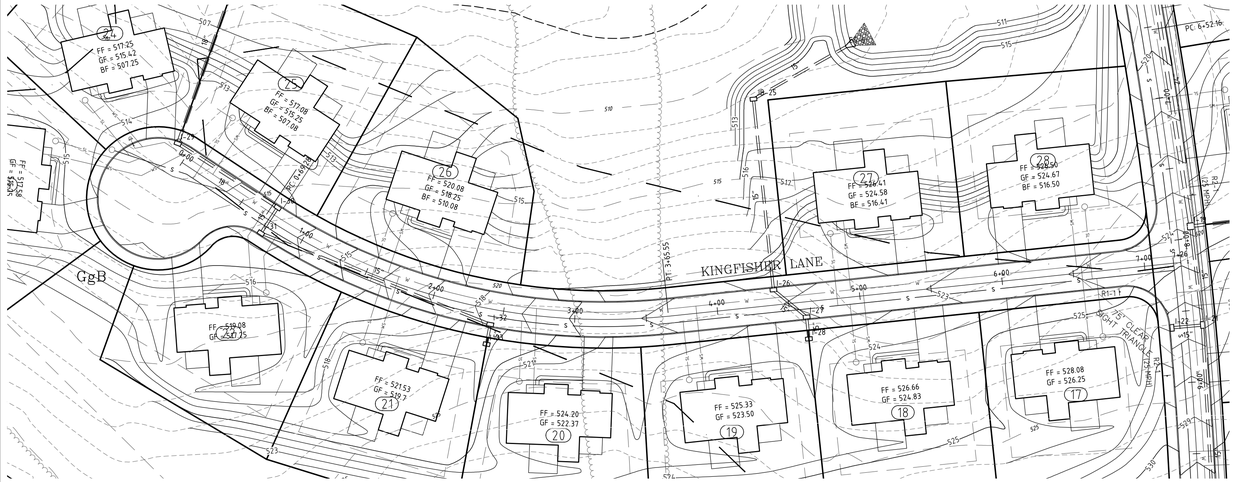

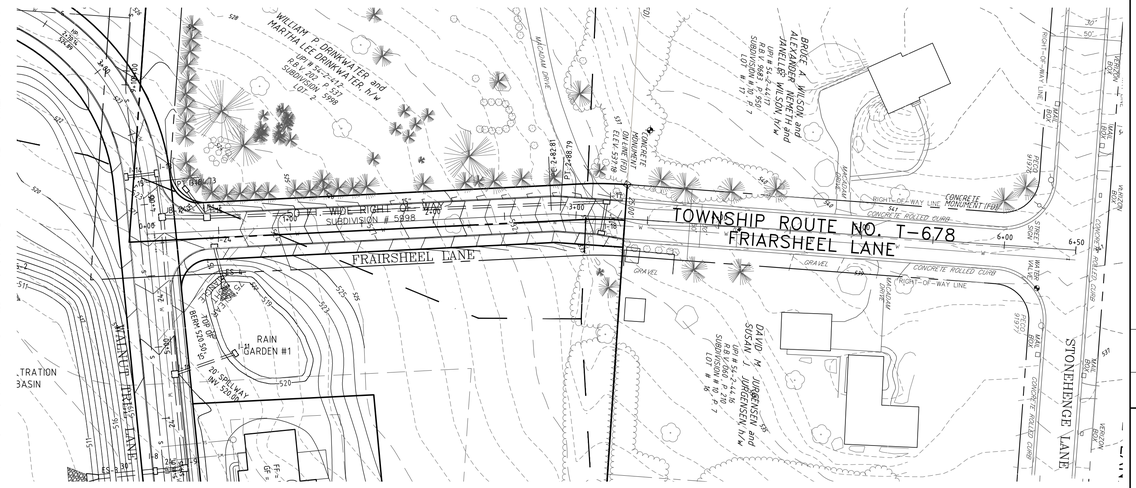

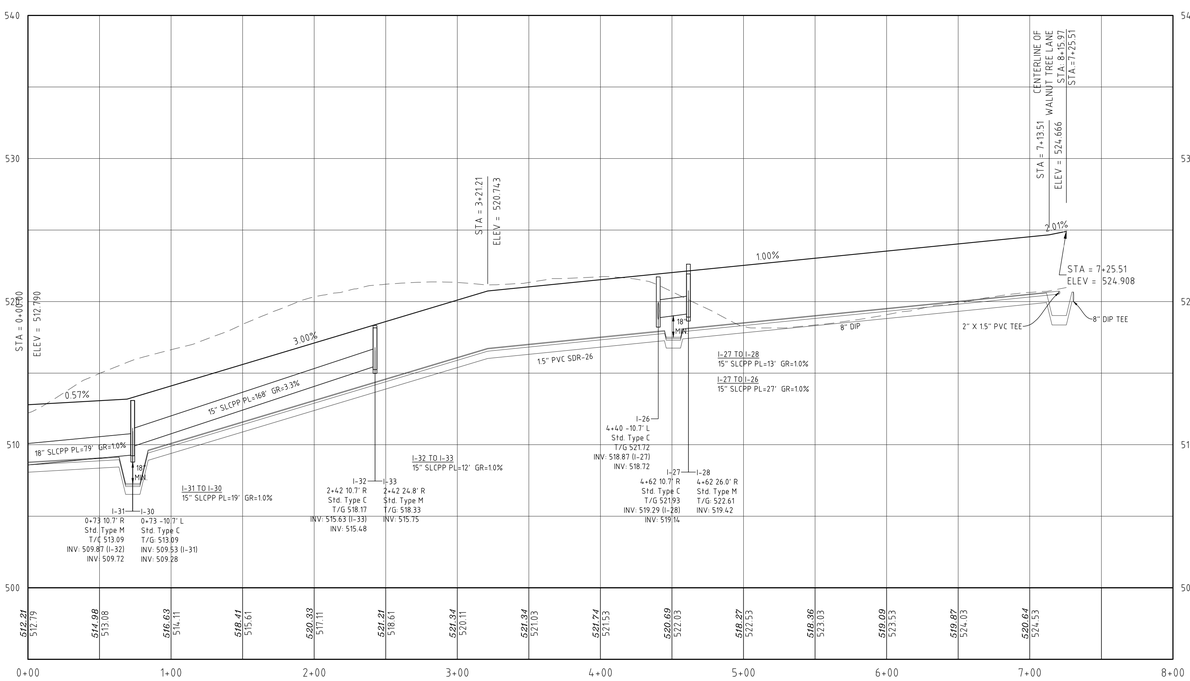

Kingfisher Way

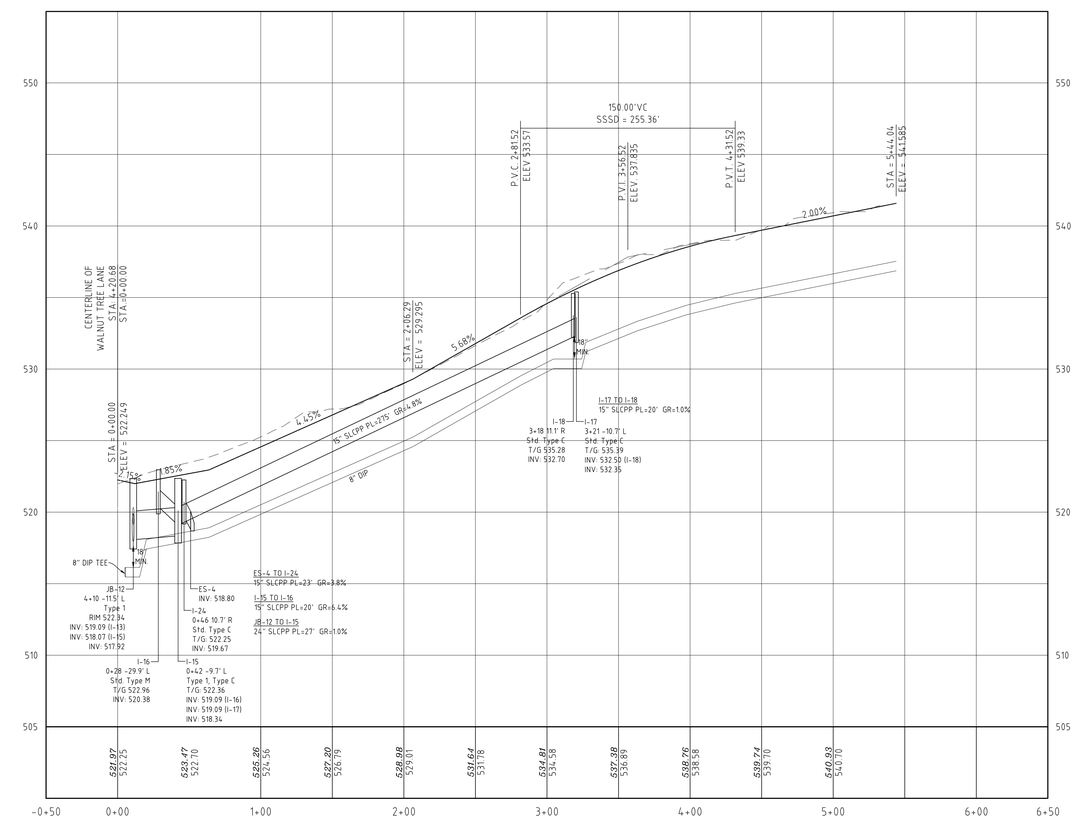

Friarsheel Lane

GRAPHIC SCALE 1"=50'

50 0 50 100 150

Revisor	Date	Description	Rev. By
4	2/5/20	REVISED PER TOWNSHIP COMMENTS	MDH
3	12/20/19	REVISED PER TOWNSHIP COMMENTS	MDH
2	10/23/19	REVISED PER TOWNSHIP COMMENTS	MDH
1	7/24/19	REVISED PER TOWNSHIP COMMENTS	MDH

THIS DOCUMENT AND ALL INFORMATION AND WORK PRODUCT REPRESENTED BY AND CONTAINED HEREON, IS THE SOLE AND EXCLUSIVE PROPERTY OF DH ENTERPRISES, INC. THE INFORMATION CONTAINED HEREIN IS LICENSED ONLY FOR LIMITED USE BY THE PROJECT OWNER, OR ITS AGENTS, FOR THE PURPOSE OF THE PROJECT. ANY OTHER USE OR DISTRIBUTION TO ANY PARTY WITHOUT THE EXPRESS WRITTEN PERMISSION OF DH ENTERPRISES, INC. COPYRIGHT, 2019, DH ENTERPRISES. ALL RIGHTS RESERVED

2815 PENN AVENUE
WEST LAWN, PA
610-927-4242

Enterprises
a civil engineering design & management firm

SEAL: COMMONWEALTH OF PENNSYLVANIA REGISTERED PROFESSIONAL MICHAEL DUAIN HARTMAN ENGINEER No. PE059897

"TROUTBECK FARMS"
PRELIMINARY PLAN
PROFILE - KINGFISHER WAY & FRIARSHEEL

CLIENT: MOSER CONSTRUCTION MANAGEMENT, LLC
LOCATION: WILLISTOWN TOWNSHIP, CHESTER COUNTY, PENNSYLVANIA
DATE: JUNE 1, 2018

DRAWN BY: M.D.HARTMAN
PROJ.MANAGER: M.D.HARTMAN
SCALE: 1" = 50'
SHEET: 12 of 25
PLAN NO: 17032-P-D-6.2

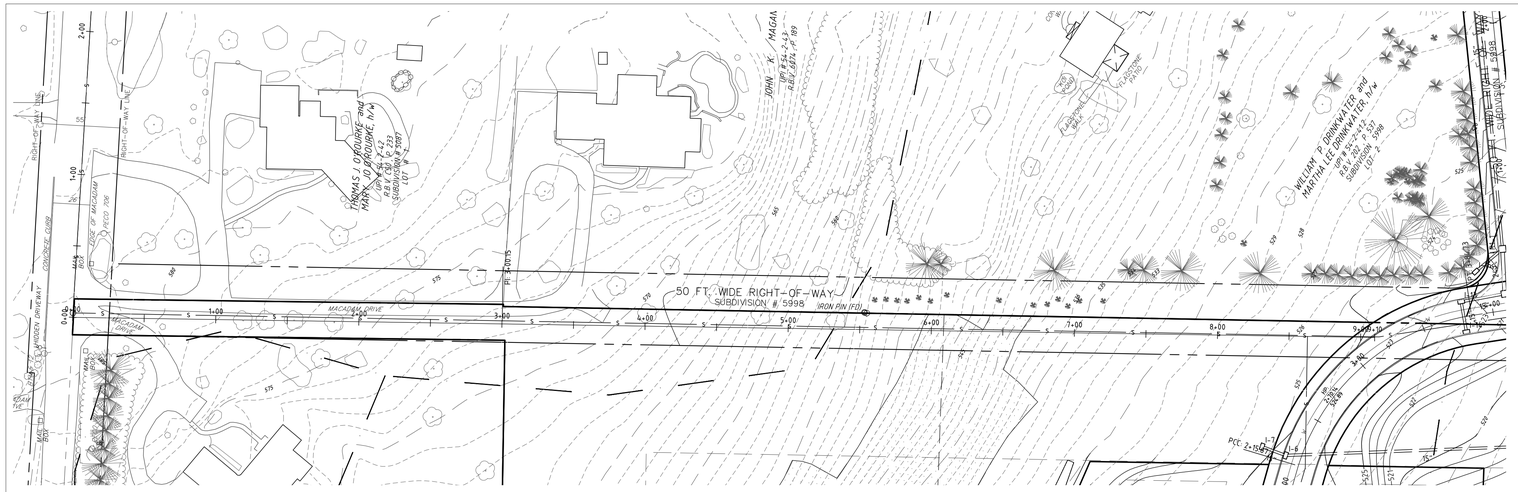

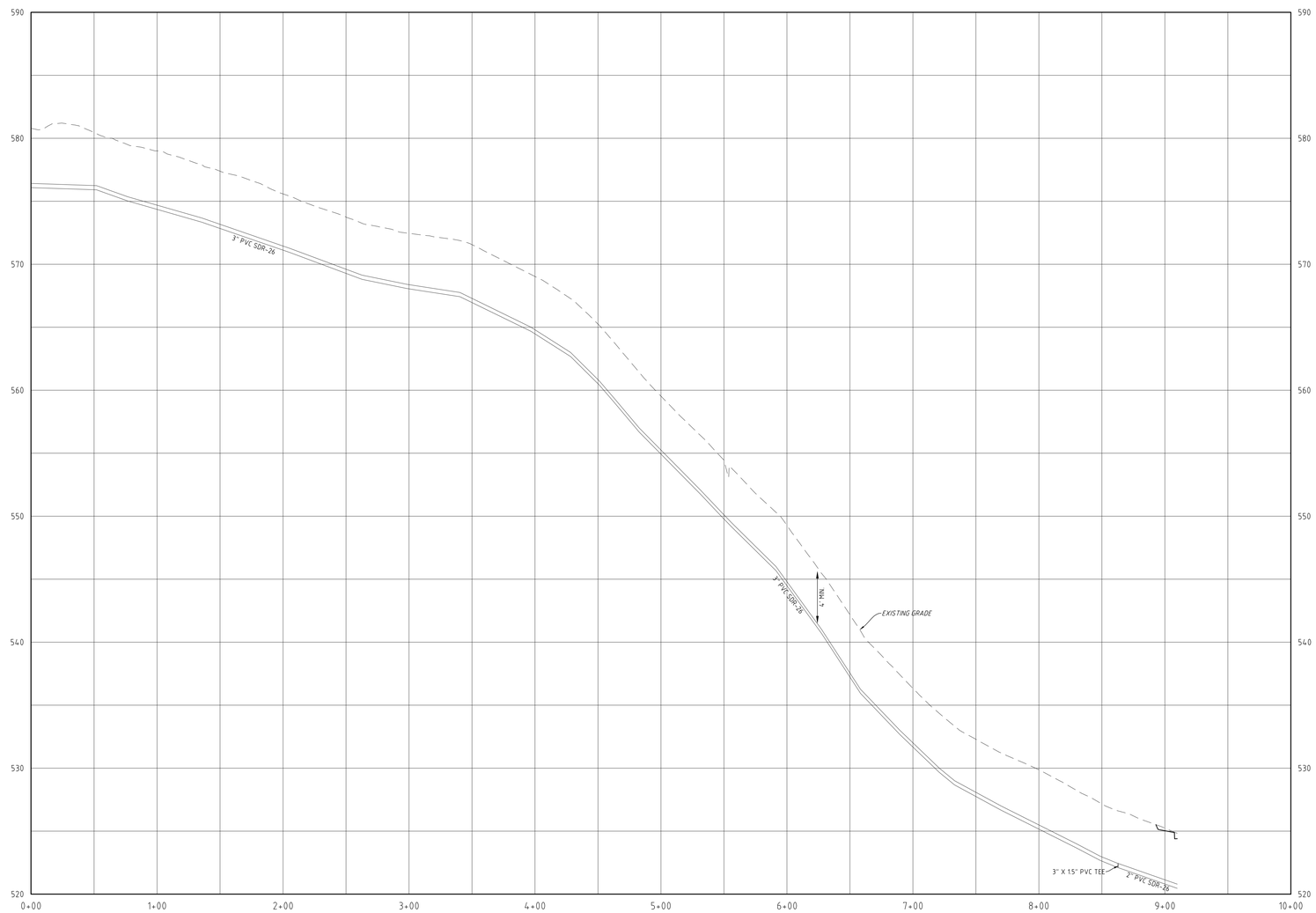

Overland Sanitary Sewer

GRAPHIC SCALE 1"=50'

50 0 50 100 150

Revision	Date	Description	Rev.By
4	2/5/20	REVISED PER TOWNSHIP COMMENTS	MDH
3	12/20/19	REVISED PER TOWNSHIP COMMENTS	MDH
2	10/23/19	REVISED PER TOWNSHIP COMMENTS	MDH
1	7/24/19	REVISED PER TOWNSHIP COMMENTS	MDH

THIS DOCUMENT AND ALL INFORMATION AND WORK PRODUCT REPRESENTED BY AND CONTAINED HEREIN, IS THE SOLE AND EXCLUSIVE PROPERTY OF DH ENTERPRISES, INC. THE INFORMATION CONTAINED HEREIN IS LICENSED ONLY FOR LIMITED USE BY THE PROJECT OWNER FOR THE PROJECT DESCRIBED HEREIN. THIS DOCUMENT MAY NOT BE REPRODUCED OR DISTRIBUTED TO ANY PARTY WITHOUT THE EXPRESS WRITTEN PERMISSION OF DH ENTERPRISES, INC. COPYRIGHT, 2019, DH ENTERPRISES. ALL RIGHTS RESERVED.

2815 PENN AVENUE
WEST LAWN, PA
610-927-4242

Enterprises
a civil engineering design & management firm

SEAL:

COMMONWEALTH OF PENNSYLVANIA
REGISTERED PROFESSIONAL
MICHAEL DUAIN HARTMAN
ENGINEER
No. PE059897

"TROUTBECK FARMS"
PRELIMINARY PLAN
PROFILE – OVERLAND SANITARY SEWER

CLIENT: MOSER CONSTRUCTION MANAGEMENT, LLC
LOCATION: WILLISTOWN TOWNSHIP, CHESTER COUNTY, PENNSYLVANIA
DATE: JUNE 1, 2018

DRAWN BY: M.D.HARTMAN
PROJ.MANAGER: M.D.HARTMAN
SCALE: 1" = 50'
SHEET: 13 of 25
PLAN NO: 17032-P-D-6.3

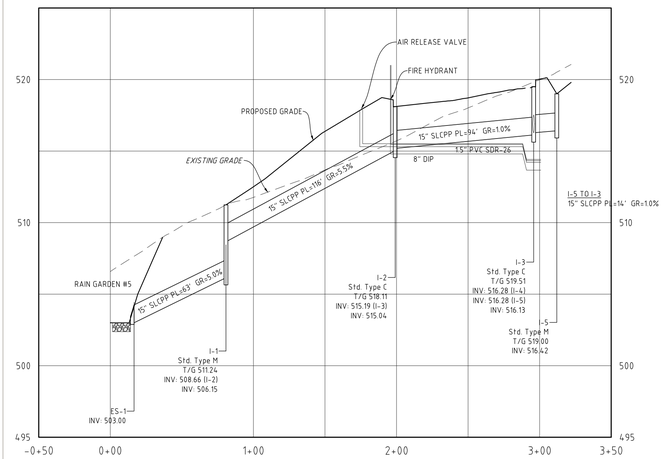

ES–1 – I–5

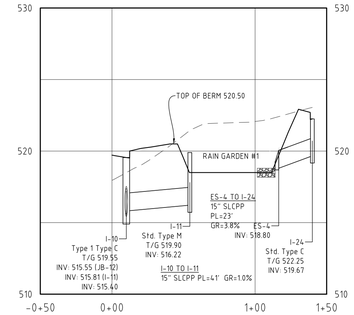

I–10 – I–24

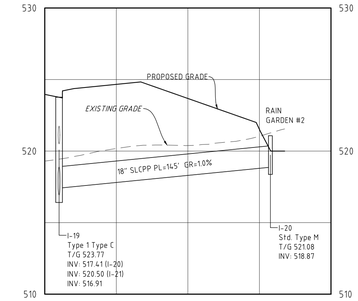

I–19 – I–20

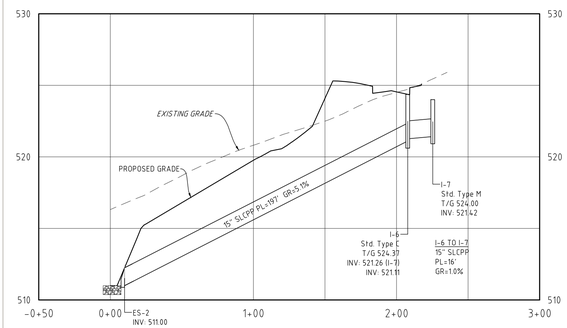

ES–2 – I–7

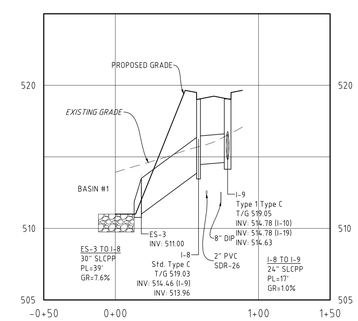

ES–3 – I–9

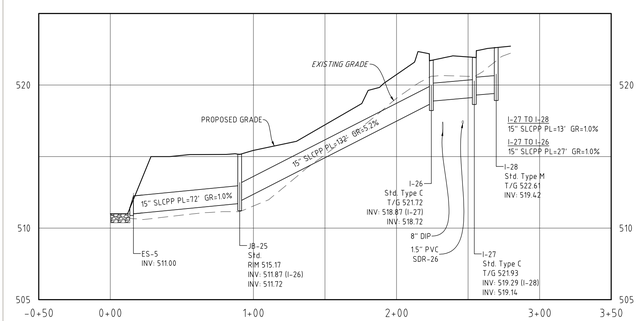

ES–5 – I–28

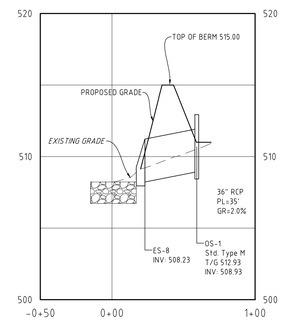

Basin 1

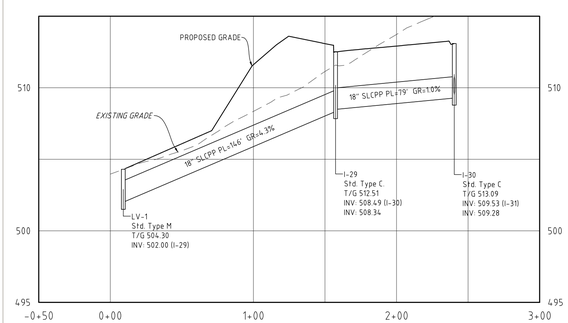

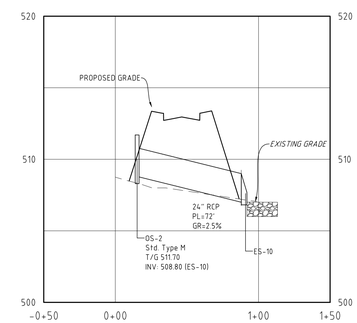

STORM AND SANITARY SEWER NOTES:

1. STORM SEWERS AND SANITARY SEWERS SHALL BE CONSTRUCTED IN ACCORDANCE WITH ALL APPLICABLE MUNICIPAL AND AUTHORITY DETAILS AND SPECIFICATIONS.
2. GRATE ELEVATIONS FOR INLETS ALONG CURB ARE COMPUTED TO THE CENTER OF THE INLET AT THE GUTTERLINE.
3. GRATE ELEVATIONS FOR INLETS IN NON-CURBED AREAS ARE COMPUTED TO THE CENTER OF THE INLET IN BOTH DIMENSIONS.
4. SANITARY SEWER AND STORM SEWER MANHOLE RIM ELEVATIONS ARE COMPUTED TO CENTER OF THE LID.
5. PROTECTION OF PIPES - THE CONTRACTOR MUST PROVIDE AND MAINTAIN A MINIMUM OF 18" OF COVER OVER ALL STORM SEWER AND SANITARY SEWER PIPES DURING CONSTRUCTION STAGES UNTIL THE BINDER PAVING COURSE IS PLACED.
6. DEPTH OF STORM SEWERS - ALL STORM SEWER PIPE MUST BE PLACED AT A SUFFICIENT DEPTH TO ALLOW FOR THE FULL DEPTH OF PAVING, INCLUDING THE BASE COURSE, TO BE PLACED ABOVE THE TOP OF PIPE.

GRAPHIC SCALE 1"=50'

50 0 50 100 150

Revision	Date	Description	Rev. By
4	2/5/20	REVISED PER TOWNSHIP COMMENTS	MDH
3	12/20/19	REVISED PER TOWNSHIP COMMENTS	MDH
2	10/23/19	REVISED PER TOWNSHIP COMMENTS	MDH
1	7/24/19	REVISED PER TOWNSHIP COMMENTS	MDH

THIS DOCUMENT AND ALL INFORMATION AND WORK PRODUCT REPRESENTED BY AND CONTAINED HEREON, IS THE SOLE AND EXCLUSIVE PROPERTY OF DH ENTERPRISES, INC. THE INFORMATION CONTAINED HEREIN IS LICENSED ONLY FOR LIMITED USE BY THE PARTIES TO WHOM IT IS ADDRESSED. ANY REPRODUCTION, DISTRIBUTION, DISCLOSURE OR USE BY ANY PARTY WITHOUT THE EXPRESS WRITTEN PERMISSION OF DH ENTERPRISES, INC. COPYRIGHT, 2019, DH ENTERPRISES. ALL RIGHTS RESERVED.

2815 PENN AVENUE
WEST LAWN, PA
610-927-4242

Enterprises
a civil engineering design & management firm

SEAL:
COMMONWEALTH OF PENNSYLVANIA
REGISTERED PROFESSIONAL
MICHAEL DUAIN HARTMAN
ENGINEER
No. PE059897

"TROUTBECK FARMS"
PRELIMINARY PLAN
UTILITY PROFILES

CLIENT: MOSER CONSTRUCTION MANAGEMENT, LLC
LOCATION: WILLISTOWN TOWNSHIP, CHESTER COUNTY, PENNSYLVANIA
DATE: JUNE 1, 2018

DRAWN BY: M.D.HARTMAN
PROJ MANAGER: M.D.HARTMAN
SCALE: 1" = 50'
SHEET: 14 of 25
PLAN NO: 17032–P–D–6.4

NPDES PERMIT BOUDANRY AREA = 64.3 ACRES
LIMIT OF DISTURANCE AREA = 23.7 ACRES

Rev.	Date	Description	By
4	2/5/20	REVISED PER TOWNSHIP COMMENTS	MDH
3	12/20/19	REVISED PER TOWNSHIP COMMENTS	MDH
2	10/23/19	REVISED PER TOWNSHIP COMMENTS	MDH
1	7/24/19	REVISED PER TOWNSHIP COMMENTS	MDH

THIS DOCUMENT AND ALL INFORMATION AND WORK PRODUCT REPRESENTED BY AND CONTAINED HEREON, IS THE SOLE AND EXCLUSIVE PROPERTY OF DH ENTERPRISES, INC. THE INFORMATION CONTAINED HEREIN IS LICENSED ONLY FOR LIMITED USE BY THE PARTIES TO WHOM IT IS ISSUED. THE REPRODUCTION, DISTRIBUTION, OR USE OF THIS DOCUMENT BY ANY PARTY WITHOUT THE EXPRESS WRITTEN PERMISSION OF DH ENTERPRISES, INC. COPYRIGHT, 2019, DH ENTERPRISES. ALL RIGHTS RESERVED.

2815 PENN AVENUE
WEST LAWN, PA
610-927-4242

a civil engineering design & management firm

Enterprises

SEAL: COMMONWEALTH OF PENNSYLVANIA REGISTERED PROFESSIONAL MICHAEL DUAIN HARTMAN ENGINEER No. PE059897

"TROUTBECK FARMS" PRELIMINARY PLAN
EROSION AND SEDIMENT CONTROL PLAN

CLIENT: MOSER CONSTRUCTION MANAGEMENT, LLC
LOCATION: WILLISTOWN TOWNSHIP, CHESTER COUNTY, PENNSYLVANIA
DATE: JUNE 1, 2018

DRAWN BY: M.D.HARTMAN
PROJ. MANAGER: M.D.HARTMAN
SCALE: 1" = 50'
SHEET: 15 of 25
PLAN NO.: 17032-P-D-7.0

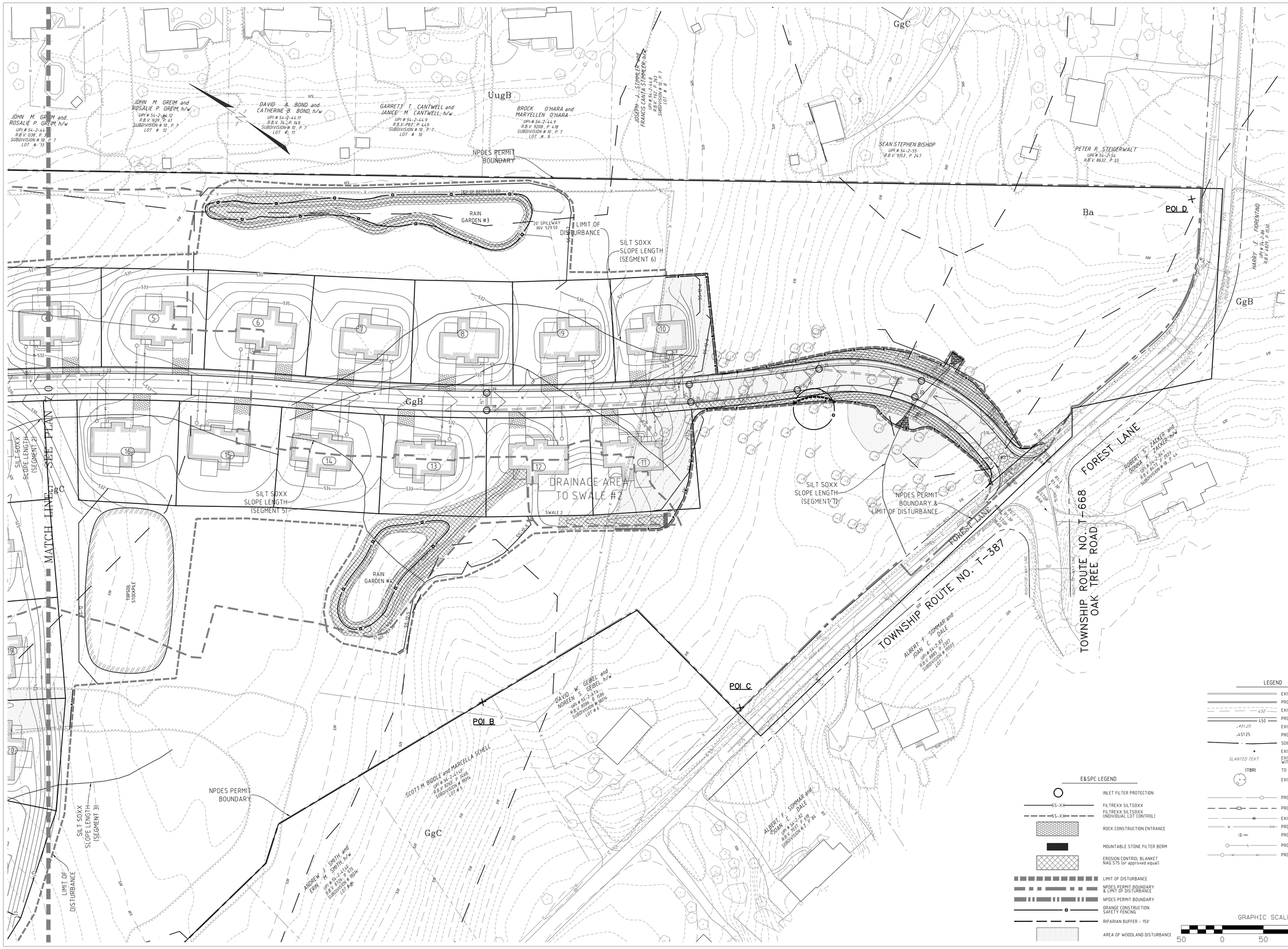

Revision	Date	Description	Rev.By
4	2/5/20	REVISED PER TOWNSHIP COMMENTS	MDH
3	12/20/19	REVISED PER TOWNSHIP COMMENTS	MDH
2	10/23/19	REVISED PER TOWNSHIP COMMENTS	MDH
1	7/24/19	REVISED PER TOWNSHIP COMMENTS	MDH

THIS DOCUMENT AND ALL INFORMATION AND WORK PRODUCT REPRESENTED BY AND CONTAINED HEREIN, IS THE SOLE AND EXCLUSIVE PROPERTY OF DH ENTERPRISES, INC. THE INFORMATION CONTAINED HEREIN IS LICENSED ONLY FOR LIMITED USE BY THE PARTIES TO WHOM IT IS ISSUED AND THE PARTIES TO WHOM IT IS ISSUED MAY NOT DISTRIBUTE IT TO ANY THIRD PARTY WITHOUT THE EXPRESS WRITTEN PERMISSION OF DH ENTERPRISES, INC. COPYRIGHT, 2019, DH ENTERPRISES. ALL RIGHTS RESERVED.

2815 PENN AVENUE
WEST LAWN, PA
610-927-4242

DH Enterprises
a civil engineering design & management firm

SEAL: COMMONWEALTH OF PENNSYLVANIA REGISTERED PROFESSIONAL MICHAEL DUAIN HARTMAN ENGINEER No. PE059897

"TROUTBECK FARMS"
PRELIMINARY PLAN
EROSION AND SEDIMENT CONTROL PLAN

CLIENT: MOSER CONSTRUCTION MANAGEMENT, LLC
LOCATION: WILLISTOWN TOWNSHIP, CHESTER COUNTY, PENNSYLVANIA
DATE: JUNE 1, 2018

DRAWN BY: M.D.HARTMAN
PROJ. MANAGER: M.D.HARTMAN
SCALE: 1" = 50'
SHEET: 16 of 25
PLAN NO: 17032-P-D-7.1

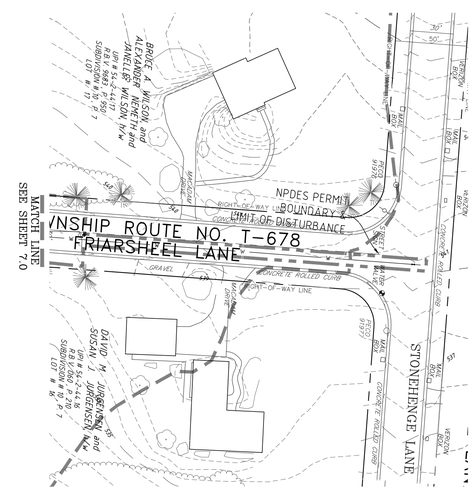

E&SPC LEGEND

- INLET FILTER PROTECTION
- SS-XX — FILTREXX SILTSOXX
- SS-XX — FILTREXX SILTSOXX (INDIVIDUAL LOT CONTROL)
- ROCK CONSTRUCTION ENTRANCE
- MOUNTABLE STONE FILTER BERM
- EROSION CONTROL BLANKET NAG S75 (or approved equal)
- LIMIT OF DISTURBANCE
- NPDES PERMIT BOUNDARY & LIMIT OF DISTURBANCE
- NPDES PERMIT BOUNDARY
- ORANGE CONSTRUCTION SAFETY FENCING
- RIPARIAN BUFFER - 150'
- AREA OF WOODLAND DISTURBANCE

LEGEND

- EXISTING CURB
- PROPOSED CURB
- 450 — EXISTING CONTOURS
- 450 — PROPOSED CONTOURS
- +451.25 — EXISTING SPOT ELEVATION
- +451.25 — PROPOSED SPOT ELEVATION
- SOIL LINE
- EXISTING STREET SIGN
- SLANTED TEXT — EXISTING FEATURES ARE LABELED WITH SLANTED TEXT
- (TBR) — TO BE REMOVED
- EXISTING DECIDUOUS TREE
- PROPOSED SANITARY SEWER & MAN
- PROPOSED STORM SEWER & CATCH E
- EXISTING WATER LINE & VALVE
- PROPOSED WATER LINE & VALVE
- PROPOSED FIRE HYDRANT
- PROPOSED GRINDER PUMP
- PROPOSED WATER LATERAL

GRAPHIC SCALE 1"=50'

50 0 50 100 150

Revisor	Date	Description	Rev. By
4	2/5/20	REVISED PER TOWNSHIP COMMENTS	MDH
3	12/20/19	REVISED PER TOWNSHIP COMMENTS	MDH
2	10/23/19	REVISED PER TOWNSHIP COMMENTS	MDH
1	7/24/19	REVISED PER TOWNSHIP COMMENTS	MDH

THIS DOCUMENT AND ALL INFORMATION AND WORK PRODUCT REPRESENTED BY AND CONTAINED HEREIN, IS THE SOLE AND EXCLUSIVE PROPERTY OF DH ENTERPRISES, INC. THE INFORMATION CONTAINED HEREIN IS LICENSED ONLY FOR LIMITED USE BY THE OWNER OF THE LAND TO WHICH THIS DOCUMENT PERTAINS. THIS DOCUMENT MAY NOT BE REPRODUCED OR GIVEN TO ANY PARTY WITHOUT THE EXPRESS WRITTEN PERMISSION OF DH ENTERPRISES, INC. COPYRIGHT, 2019, DH ENTERPRISES. ALL RIGHTS RESERVED.

2815 PENN AVENUE
WEST LAWN, PA
610-927-4242

Enterprises
a civil engineering design & management firm

SEAL:
COMMONWEALTH OF PENNSYLVANIA
REGISTERED PROFESSIONAL
MICHAEL DUAIN HARTMAN
ENGINEER
No. PE059897

"TROUTBECK FARMS"
PRELIMINARY PLAN
EROSION AND SEDIMENT CONTROL PLAN

CLIENT: MOSER CONSTRUCTION MANAGEMENT, LLC
LOCATION: WILLISTOWN TOWNSHIP, CHESTER COUNTY, PENNSYLVANIA
DATE: JUNE 1, 2018

DRAWN BY:	M.D.HARTMAN
PROJ.MANAGER:	M.D.HARTMAN
SCALE:	1" = 50'
SHEET:	17 of 25
PLAN NO:	17032-P-D-7.2

CONSTRUCTION SEQUENCE

CONSTRUCTION SEQUENCE NOTES

1. ALL EARTH DISTURBANCE ACTIVITIES SHALL PROCEED IN ACCORDANCE WITH THE FOLLOWING SEQUENCE. EACH STAGE SHALL BE COMPLETED IN COMPLIANCE WITH CHAPTER 102 REGULATIONS BEFORE ANY FOLLOWING STAGE IS INITIATED. CLEARING AND GRUBBING SHALL BE LIMITED ONLY TO THOSE AREAS DESCRIBED IN EACH STAGE.
2. AT LEAST 7 DAYS BEFORE STARTING ANY EARTH DISTURBANCE ACTIVITIES, THE OPERATOR SHALL INVITE ALL CONTRACTORS INVOLVED IN THOSE ACTIVITIES, THE LANDOWNER, ALL APPROPRIATE MUNICIPAL OFFICIALS, THE E&S CONTROL PLAN PREPARER, AND A REPRESENTATIVE OF THE CHESTER COUNTY CONSERVATION DISTRICT TO SCHEDULE AN ON-SITE PRE-CONSTRUCTION MEETING. IN ADDITION, AT LEAST 3 DAYS BEFORE STARTING ANY EARTH DISTURBANCE ACTIVITIES, ALL CONTRACTORS INVOLVED IN THOSE ACTIVITIES SHALL NOTIFY THE PENNSYLVANIA ONE CALL SYSTEM INC. AT 1-800-242-1776 FOR BURIED UTILITIES LOCATION.
3. BEFORE INITIATING ANY REVISION TO THE APPROVED EROSION AND SEDIMENT CONTROL PLAN OR REVISIONS TO OTHER PLANS WHICH MAY AFFECT THE EFFECTIVENESS OF THE APPROVED E & S CONTROL PLAN, THE OPERATOR MUST RECEIVE APPROVAL OF THE REVISIONS FROM THE CHESTER COUNTY CONSERVATION DISTRICT. THE OPERATOR SHALL ASSURE THAT THE APPROVED EROSION AND SEDIMENT CONTROL PLAN IS PROPERLY AND COMPLETELY IMPLEMENTED. IMMEDIATELY UPON DISCOVERING UNFORESEEN CIRCUMSTANCES POSING THE POTENTIAL FOR ACCELERATED EROSION AND/OR SEDIMENT POLLUTION, THE OPERATOR SHALL IMPLEMENT APPROPRIATE BEST MANAGEMENT PRACTICES TO ELIMINATE POTENTIAL FOR ACCELERATED EROSION AND/OR SEDIMENT POLLUTION.
4. THE ANTICIPATED WASTES ARE GENERAL CONSTRUCTION WASTES. THE OPERATOR SHALL REMOVE FROM THE SITE, RECYCLE, OR DISPOSE OF ALL BUILDING MATERIALS AND WASTES IN ACCORDANCE WITH THE DEPARTMENT'S SOLID WASTE MANAGEMENT REGULATIONS AT 25 PA. CODE 260.1 ET SEQ., 271.1 ET SEQ., AND 287.1 ET SEQ. THE CONTRACTOR SHALL NOT ILLEGALLY BURY, DUMP, OR DISCHARGE ANY BUILDING MATERIAL OR WASTES AT THE SITE.
5. A COPY OF THE APPROVED EROSION AND SEDIMENT CONTROL PLAN MUST BE AVAILABLE AT THE PROJECT SITE AT ALL TIMES. ADDITIONALLY, THE OPERATOR SHALL ASSURE THAT AN EROSION AND SEDIMENT CONTROL PLAN HAS BEEN PREPARED, AND HAS BEEN APPROVED BY THE CHESTER COUNTY CONSERVATION DISTRICT AND/OR LOCAL MUNICIPALITY IN COMPLIANCE WITH CHAPTER 102 RULES & REGULATIONS, AND IS BEING IMPLEMENTED AND MAINTAINED FOR ALL OFF SITE SOIL AND/OR ROCK SPOIL AND/OR BORROW AREAS.

CONSTRUCTION SEQUENCE

NOTE: THE INSTALLATION OF THE OFF-SITE SANITARY SEWER AND WATER LINES MAY PROCEED AT ANY TIME FOLLOWING THE CONSTRUCTION SEQUENCE (OFF-SITE UTILITIES).

STAGE #1 (WALNUT TREE LANE STA 3+80 TO STA 22+00 & LOTS 1-16)

1. INSTALL ROCK CONSTRUCTION ENTRANCE WITHIN WALNUT TREE LANE AT THE INTERSECTION OF FOREST LANE AS SHOWN ON THE PLAN.
2. FIELD DELINEATE THE LIMIT OF DISTURBANCE (LOD) PRIOR TO DISTURBANCE ACTIVITIES WITH SURVEY STAKES, POSTS & ROPE. INSTALL SILT SOXX SECTION 2, 5, 6 & 7 AND ORANGE CONSTRUCTION SAFETY FENCING IN THE LOCATIONS AS SHOWN ON THE E&S CONTROL PLAN.
3. INITIATE INSTALLATION OF THE SEDIMENT BASIN #1 WITH DISCHARGE PIPE OS-1 TO ES-8, INCLUDING, ANTI-SEEP COLLARS AND OUTFALL RIP-RAP APRON. INSTALL TEMPORARY RISER, BAFFLES, CLEANOUT STAKES, DEWATERING FACILITIES AND PERMANENT OUTLET STRUCTURE TEMPORARY TRASH RACK.
4. GRADE AREA BEHIND BERM AS SHOWN FOR THE SEDIMENT BASIN THE E&S CONTROL PLAN AND IMMEDIATELY IMPLEMENT PERMANENT VEGETATIVE SURFACE STABILIZATION OF ALL DISTURBED AREAS.
5. INITIATE CLEARING AND GRUBBING OF THE FORESTED AREA ALONG WALNUT TREE LANE TO THE EXTENTS NECESSARY TO ACHIEVE PROPOSED GRADES.
6. INITIATE STRIPPING AND STOCKPILING OF TOPSOIL FROM THE RIGHT-OF-WAY OF WALNUT TREE LANE TO THE EXTENT NECESSARY TO ACHIEVE PROPOSED GRADES AS SHOWN ON THE E&S CONTROL PLANS.
   NOTE: ALL RUNOFF FROM THE DISTURBED AREAS SHALL BE DIRECTED TOWARDS EITHER SILT FENCE OR THE SEDIMENT BASIN. STOCKPILE HEIGHTS MUST NOT EXCEED 35'. STOCKPILE SLOPES MUST BE 2:1 OR FLATTER. STRIPPING OF TOPSOIL SHALL BE KEPT TO A MINIMUM FOR THOSE AREAS BEING REGARDED AT A GIVEN TIME.
7. INITIATE ROUGH GRADING ACTIVITIES REQUIRED TO ACHIEVE THE PROPOSED GRADES OF THE AREAS WHERE TOPSOIL HAS BEEN STRIPPED IN THE PREVIOUS STAGE.
8. CONCURRENTLY WITH STAGE 7, INSTALL THE STORM SEWER FROM OS-2 TO ES-10, INCLUDING, ANTI-SEEP COLLARS AND OUTFALL RIP-RAP APRON.
9. UPON REACHING SUBGRADE WITHIN THE PROPOSED ROAD, INSTALL THE SANITARY SEWER, STORM SEWER AND WATER LINE. INSTALL STONE INLET PROTECTION IN INLETS NOTED ON THE PLANS.
   NOTE: BERMS ARE REQUIRED FOR ALL INSTALLATIONS. EARTHEN BERMS ARE TO BE MAINTAINED UNTIL ROADWAY IS STONED. ROAD SUBBASE BERM TO BE MAINTAINED UNTIL ROADWAY IS PAVED.
10. PLACE STONE SUBBASE ON ROADWAY SUBGRADE.
11. BEGIN HOME CONSTRUCTION ON LOTS 1 THROUGH 16 IN ACCORDANCE WITH THE INDIVIDUAL LOT CONSTRUCTION SEQUENCE. IN THE EVENT THAT HOME CONSTRUCTION IS NOT TO BEGIN IMMEDIATELY, IMPLEMENT TEMPORARY VEGETATIVE STABILIZATION ON THAT LOT.
   NOTE: PRIOR TO THE INITIATION OF HOME CONSTRUCTION ON LOTS 11, 12, OR 13, CONSTRUCT SWALE #2 AS SHOWN ON THE PLANS AND IN THE DETAILS. LINE SWALE WITH EROSION CONTROL BLANKET AND PERMANENTLY STABILIZE.
12. INSTALL BITUMINOUS PAVING AND CURBING ALONG ROADWAYS.
13. COMMENCE AND COMPLETE THE PERMANENT VEGETATIVE STABILIZATION OF ALL DISTURBED AREAS WHICH ARE AT FINAL GRADE. INSTALL PROPOSED TREES AS SHOWN ON THE LANDSCAPING PLAN.
14. UPON STABILIZATION OF ALL UPSLOPE DISTURBED AREAS, INITIATE INSTALLATION OF RAIN GARDENS #1, #2, #3, & #4 IN ACCORDANCE WITH THE **INDIVIDUAL BMP CONSTRUCTION SEQUENCE AND CRITICAL STAGES OF IMPLEMENTATION** PROVIDED IN THE POST CONSTRUCTION STORM WATER MANAGEMENT PLAN AND REPORT.

STAGE #2 (WALNUT TREE LANE STA 0+00 TO 3+80, KINGFISHER WAY & LOTS 17-34)

15. INSTALL ROCK CONSTRUCTION ENTRANCES WITHIN WALNUT TREE LANE AND KINGFISHER WAY AT THE LIMITS OF STAGE #1 AS SHOWN ON THE PLAN.
16. FIELD DELINEATE ANY REMINING PORTIONS OF THE LIMIT OF DISTURBANCE (LOD) THAT WERE NOT MARKED IN STAGE #1 WITH SURVEY STAKES, POSTS & ROPE. INSTALL SILT SOXX SECTION 1, 3, & 4 IN THE LOCATIONS AS SHOWN ON THE E&S CONTROL PLAN. CONSTRUCT SWALE #1 AS SHOWN ON THE PLANS AND IN THE DETAILS. LINE SWALE WITH EROSION CONTROL BLANKET AND PERMANENTLY STABILIZE.
17. INITIATE CLEARING AND GRUBBING OF THE WOODED AREAS ALONG WALNUT TREE LANE AND KINGFISHER WAY TO THE EXTENTS NECESSARY TO ACHIEVE PROPOSED GRADES.
18. INITIATE STRIPPING AND STOCKPILING OF TOPSOIL FROM THE RIGHT-OF-WAY OF WALNUT TREE LANE AND KINGFISHER WAY TO THE EXTENT NECESSARY TO ACHIEVE PROPOSED GRADES AS SHOWN ON THE E&S CONTROL PLANS.
   NOTE: ALL RUNOFF FROM THE DISTURBED AREAS SHALL BE DIRECTED TOWARDS EITHER SILT FENCE OR THE SEDIMENT BASIN. STOCKPILE HEIGHTS MUST NOT EXCEED 35'. STOCKPILE SLOPES MUST BE 2:1 OR FLATTER. STRIPPING OF TOPSOIL SHALL BE KEPT TO A MINIMUM FOR THOSE AREAS BEING REGARDED AT A GIVEN TIME.
19. INITIATE ROUGH GRADING ACTIVITIES REQUIRED TO ACHIEVE THE PROPOSED GRADES OF THE AREAS WHERE TOPSOIL HAS BEEN STRIPPED IN THE PREVIOUS STAGE.
20. UPON REACHING SUBGRADE WITHIN THE PROPOSED ROAD, INSTALL THE SANITARY SEWER, STORM SEWER AND WATER LINE. INSTALL STONE INLET PROTECTION IN INLETS NOTED ON THE PLANS.
   NOTE: BERMS ARE REQUIRED FOR ALL INSTALLATIONS. EARTHEN BERMS ARE TO BE MAINTAINED UNTIL ROADWAY IS STONED. ROAD SUBBASE BERM TO BE MAINTAINED UNTIL ROADWAY IS PAVED.
21. PLACE STONE SUBBASE ON ROADWAY SUBGRADE.
22. BEGIN HOME CONSTRUCTION ON ALL LOTS IN ACCORDANCE WITH THE INDIVIDUAL LOT CONSTRUCTION SEQUENCE. IN THE EVENT THAT HOME CONSTRUCTION IS NOT TO BEGIN IMMEDIATELY, IMPLEMENT TEMPORARY VEGETATIVE STABILIZATION ON THAT LOT.
23. INSTALL BITUMINOUS PAVING AND CURBING ALONG ROADWAYS.
24. COMMENCE AND COMPLETE THE PERMANENT VEGETATIVE STABILIZATION OF ALL DISTURBED AREAS WHICH ARE AT FINAL GRADE. INSTALL PROPOSED TREES AS SHOWN ON THE LANDSCAPING PLAN.
25. UPON STABILIZATION OF ALL UPSLOPE DISTURBED AREAS, INITIATE INSTALLATION OF RAIN GARDEN #5 IN ACCORDANCE WITH THE **INDIVIDUAL BMP CONSTRUCTION SEQUENCE AND CRITICAL STAGES OF IMPLEMENTATION** PROVIDED IN THE POST CONSTRUCTION STORM WATER MANAGEMENT PLAN AND REPORT.
26. UPON STABILIZATION OF ALL UPSLOPE DISTURBED AREAS, INITIATE CONVERSION OF THE SEDIMENT BASIN #1 TO THE PERMANENT INFILTRATION BASIN #1 IN ACCORDANCE WITH THE **INDIVIDUAL BMP CONSTRUCTION SEQUENCE AND CRITICAL STAGES OF IMPLEMENTATION** PROVIDED IN THE POST CONSTRUCTION STORM WATER MANAGEMENT PLAN AND REPORT.
27. UPON STABILIZATION OF ALL DISTURBED AREAS, REMOVE ALL OTHER E&SC FACILITIES AND MEASURES, INCLUDING SILT SOXX, INLET BERMS, ETC. AN AREA SHALL BE CONSIDERED TO HAVE ACHIEVED FINAL STABILIZATION WHEN IT HAS A MINIMUM 70% UNIFORM PERENNIAL VEGETATIVE COVER OR OTHER PERMANENT NON-VEGETATIVE COVER WITH A DENSITY SUFFICIENT TO RESIST ACCELERATED SURFACE EROSION AND SUBSURFACE CHARACTERISTICS SUFFICIENT TO RESIST SLIDING AND OTHER MOVEMENTS.
28. WITHIN 30 DAYS AFTER THE COMPLETION OF EARTH DISTURBANCE ACTIVITIES AUTHORIZED BY THIS PERMIT, INCLUDING THE PERMANENT STABILIZATION OF THE SITE AND PROPER INSTALLATION OF PCSM BMPS, THE PERMITTEE SHALL FILE WITH THE DEPARTMENT, OR AUTHORIZED CONSERVATION DISTRICT, A NOTICE OF TERMINATION.

CONSTRUCTION SEQUENCE - INDIVIDUAL LOT

1. INSTALL TEMPORARY ROCK CONSTRUCTION ENTRANCE.
2. INSTALL SILT SOXX AS SHOWN ON THE PLAN DRAWING AND STANDARD DETAILS, IF APPLICABLE.
3. LIMIT THE DISTURBANCE TO ONLY THE AREA REQUIRED FOR LOT IMPROVEMENTS.
4. STRIP TOPSOIL AND STOCKPILE IN DESIGNATED AREA. IMMEDIATELY SEED AND STRAW MULCH THE STOCKPILE.
5. CONSTRUCT HOUSE AND OTHER LOT IMPROVEMENTS.
6. UPON COMPLETION OF ALL LOT IMPROVEMENTS, IMMEDIATELY REPLACE TOPSOIL AND PERMANENTLY SEED AND MULCH ALL DISTURBED AREAS. INSTALL AN EROSION CONTROL BLANKET IN ALL AREAS OF CONCENTRATED FLOWS AND ON BANKS STEEPER THAN 3:1.
7. REMOVE THE SILT SOXX ONLY AFTER PERMANENT GRASS COVER IS WELL-ESTABLISHED ON ALL DISTURBED AREAS.

CONSTRUCTION SEQUENCE (OFFSITE UTILITIES)

1. INITIATE INSTALLATION OF UTILITY LINE. IMMEDIATELY IMPLEMENT TEMPORARY VEGETATIVE STABILIZATION. THE LENGTH OF TRENCH SHOULD BE LIMITED TO THE AMOUNT THAT CAN BE INSTALLED AND BACKFILLED IN A DAY.
2. COMMENCE AND COMPLETE THE PERMANENT VEGETATIVE STABILIZATION OF ALL DISTURBED AREAS WHICH ARE AT FINAL GRADE.
3. UPON STABILIZATION OF ALL DISTURBED AREAS, REMOVE ALL OTHER E&SC FACILITIES AND MEASURES, INCLUDING SILT SOXX, INLET BERMS, ETC. AN AREA SHALL BE CONSIDERED TO HAVE ACHIEVED FINAL STABILIZATION WHEN IT HAS A MINIMUM 70% UNIFORM PERENNIAL VEGETATIVE COVER OR OTHER PERMANENT NON-VEGETATIVE COVER WITH A DENSITY SUFFICIENT TO RESIST ACCELERATED SURFACE EROSION AND SUBSURFACE CHARACTERISTICS SUFFICIENT TO RESIST SLIDING AND OTHER MOVEMENTS.

AFTER FINAL SITE STABILIZATION HAS BEEN ACHIEVED, TEMPORARY EROSION AND SEDIMENTATION CONTROLS MUST BE REMOVED. AREAS DISTURBED DURING REMOVAL OF CONTROLS MUST BE STABILIZED IMMEDIATELY.

UTILITY LINE TRENCH EXCAVATION NOTES:

1. LIMIT ADVANCED CLEARING AND GRUBBING OPERATIONS TO A DISTANCE EQUAL TO TWO TIMES THE LENGTH OF PIPE INSTALLATION THAT CAN BE COMPLETED IN ONE DAY.
2. WORK CREWS AND EQUIPMENT FOR TRENCHING, PLACEMENT OF PIPE, PLUG CONSTRUCTION AND BACKFILLING WILL BE SELF-CONTAINED AND SEPARATE FROM CLEARING AND GRUBBING AND SITE RESTORATION AND STABILIZATION OPERATIONS.
3. ALL SOIL EXCAVATED FROM THE TRENCH WILL BE PLACED ON THE UPHILL SIDE OF THE TRENCH.
4. LIMIT DAILY TRENCH EXCAVATION TO THE LENGTH OF PIPE PLACEMENT, PLUG INSTALLATION AND BACKFILLING THAT CAN BE COMPLETED THE SAME DAY.
5. WATER THAT ACCUMULATES IN THE OPEN TRENCH WILL BE COMPLETELY REMOVED BY PUMPING BEFORE PIPE PLACEMENT AND/ OR BACKFILLING BEGINS. WATER REMOVED FROM THE TRENCH SHALL BE PUMPED THROUGH A FILTRATION DEVICE.
6. ON THE DAY FOLLOWING PIPE PLACEMENT AND TRENCH BACKFILLING, THE DISTURBED AREA WILL BE GRADED TO FINAL CONTOURS AND IMMEDIATELY STABILIZED.

GENERAL NOTES

1. ONLY LIMITED DISTURBANCE WILL BE PERMITTED TO PROVIDE ACCESS FOR CONSTRUCTION/INSTALLATION OF PROPOSED BMP'S AND FOR GRADING AND ACQUIRING BORROW TO CONSTRUCT THOSE CONTROLS. ADDITIONALLY, VEHICULAR/EQUIPMENT TRAFFIC ON AREAS TO BE STABILIZED WITH PERMANENT VEGETATION SHALL BE LIMITED TO PREVENT OVER COMPACTION OF SOILS.
2. EROSION AND SEDIMENTATION CONTROLS MUST BE CONSTRUCTED, STABILIZED, AND FUNCTIONAL BEFORE SITE DISTURBANCE WITHIN THE TRIBUTARY AREAS OF THOSE CONTROLS.
3. THE SIZE AND DURATION OF DISTURBANCE SHALL BE LIMITED TO THAT WHICH IS NECESSARY TO COMPLETE THE WORK OUTLINED FOR THAT GIVEN STAGE OF THE CONSTRUCTION SEQUENCE.
4. AFTER FINAL SITE STABILIZATION HAS BEEN ACHIEVED, TEMPORARY EROSION AND SEDIMENTATION CONTROLS MUST BE REMOVED. AREAS DISTURBED DURING REMOVAL OF THE CONTROLS MUST BE STABILIZED IMMEDIATELY.
5. AT THE END OF EACH WORKING DAY, ANY SEDIMENT TRACKED OR CONVEYED ONTO A PUBLIC ROADWAY WILL BE REMOVED AND REDEPOSITED ONTO THE CONSTRUCTION SITE. REMOVAL CAN BE COMPLETED THROUGH USE OF MECHANICAL OR HAND TOOLS, BUT MUST NEVER BE WASHED OFF THE ROAD BY USE OF WATER.
6. SEDIMENT REMOVED FROM E&SPC CONTROLS & FACILITIES SHALL BE DISPOSED OF IN LANDSCAPED AREAS OUTSIDE OF STEEP SLOPES, WETLANDS, FLOODPLAINS OR DRAINAGE SWALES AND IMMEDIATELY STABILIZED, OR PLACED IN TOPSOIL STOCKPILES.
7. ALL PUMPING OF SEDIMENT LADEN WATER SHALL BE THROUGH A DIRT BAG FILTRATION DEVICE, OR EQUIVALENT SEDIMENT REMOVAL FACILITY, OVER NON-DISTURBED VEGETATED AREAS. DISCHARGE POINTS SHOULD BE ESTABLISHED TO PROVIDE FOR MAXIMUM DISTANCE TO ACTIVE WATERWAYS.
8. SEEPS OR SPRINGS ENCOUNTERED DURING CONSTRUCTION SHALL BE HANDLED IN ACCORDANCE WITH THE STANDARD AND SPECIFICATION FOR SUBSURFACE DRAIN OR OTHER APPROVED METHOD.
9. ALL EXCAVATION FOR UTILITY LINE INSTALLATION SHALL BE LIMITED TO THE AMOUNT THAT CAN BE EXCAVATED, INSTALLED, BACKFILLED AND STABILIZED WITHIN ONE WORKING DAY. ALL EXCAVATED MATERIAL SHALL BE DEPOSITED ON THE UPSLOPE SIDE OF THE TRENCH.
10. SHOULD UNFORESEEN EROSIVE CONDITIONS DEVELOP DURING CONSTRUCTION, THE CONTRACTOR SHALL TAKE ACTION TO REMEDY SUCH CONDITIONS AND TO PREVENT DAMAGE TO ADJACENT PROPERTIES AS A RESULT OF INCREASED RUNOFF AND/OR SEDIMENT DISPLACEMENT. STOCKPILES OF WOOD CHIPS, HAY BALES, CRUSHED STONE AND OTHER MULCHES SHALL BE HELD IN READINESS TO DEAL IMMEDIATELY WITH EMERGENCY PROBLEMS OF EROSION.
11. THE CONTRACTOR IS ADVISED TO BECOME THOROUGHLY FAMILIAR WITH THE PROVISIONS OF THE APPENDIX 64, EROSION CONTROL RULES AND REGULATIONS, TITLE 25, PART 1, DEPARTMENT OF ENVIRONMENTAL PROTECTION, SUBPART C, PROTECTION OF NATURAL RESOURCES, ARTICLE III, WATER RESOURCES, CHAPTER 102, EROSION CONTROL.
12. A COPY OF THIS EROSION AND SEDIMENTATION CONTROL REPORT AND PLANS MUST BE POSTED AT THE CONSTRUCTION SITE.
13. BEFORE DISPOSING OF SOIL OR RECEIVING BORROW FOR THE SITE, THE OPERATOR MUST ASSURE THAT EACH SPOIL AND BORROW AREA HAS AN E&S CONTROL PLAN APPROVED BY LOCAL COUNTY CONSERVATION DISTRICT, AND WHICH IS BEING IMPLEMENTED AND MAINTAINED ACCORDING TO DEP CHAPTER 102 REGULATIONS. ALL RECYCLING OR DISPOSAL OF MATERIALS SHALL BE ALSO IN ACCORDANCE WITH DEP CHAPTER 102 REGULATIONS.

NPDES PERMIT NOTES

1. UPON REDUCTION, LOSS OR FAILURE OF THE BMP, THE PERMITTEE AND CO-PERMITTEE SHALL TAKE IMMEDIATE ACTION TO RESTORE THE BMPS OR PROVIDE AN ALTERNATIVE METHOD OF TREATMENT.
2. WHERE E&S BMPS ARE FOUND TO BE INOPERATIVE OR INEFFECTIVE DURING AN INSPECTION, OR ANY OTHER TIME, THE PERMITTEE AND CO-PERMITTEE SHALL IMMEDIATELY CONTACT THE BERKS COUNTY CONSERVATION DISTRICT, BY PHONE OR PERSONAL CONTACT, FOLLOWED BY THE SUBMISSION OF A WRITTEN REPORT WITHIN 5 DAYS OF THE INITIAL CONTACT.
3. PERMITTEES REQUESTING A RENEWAL OF COVERAGE UNDER INDIVIDUAL PERMIT MUST SUBMIT TO THE BERKS COUNTY CONSERVATION DISTRICT AN ADMINISTRATIVELY COMPLETE AND ACCEPTABLE NOI, AT LEAST 180 DAYS PRIOR TO THE EXPIRATION DATE OF THE COVERAGE.
4. PERMITTEES AND CO-PERMITTEES ARE RESPONSIBLE FOR ENSURING THAT A LICENSED PROFESSIONAL HAVE OVERSIGHT RESPONSIBILITIES FOR THE PROPER INSTALLATION OF BMPS IDENTIFIED IN THE PCSM PLAN PRIOR TO THE SUBMISSION OF A NOTICE OF TERMINATION. THE LICENSED PROFESSIONAL SHALL CERTIFY THAT THE BMPS IDENTIFIED IN THE PLAN HAVE BEEN INSTALLED IN ACCORDANCE WITH THE APPROVED PLAN.
5. NOTICE OF TERMINATION. UPON PERMANENT STABILIZATION OF THE EARTH DISTURBANCE ACTIVITY UNDER § 102.22(A)(2) (RELATING TO PERMANENT STABILIZATION), AND INSTALLATION OF BMP'S IN ACCORDANCE WITH AN APPROVED PLAN PREPARED AND IMPLEMENTED IN ACCORDANCE WITH §§ 102.4 AND 102.8 (RELATING TO EROSION AND SEDIMENT CONTROL REQUIREMENTS; AND PCSM REQUIREMENTS), THE PERMITTEE OR CO-PERMITTEE SHALL SUBMIT A NOTICE OF TERMINATION TO THE DEPARTMENT OR CONSERVATION DISTRICT.

THE NOTICE OF TERMINATION MUST INCLUDE:
(1) THE FACILITY NAME, ADDRESS AND LOCATION.
(2) THE OPERATOR NAME AND ADDRESS.
(3) THE PERMIT NUMBER.
(4) THE REASON FOR PERMIT TERMINATION.
(5) IDENTIFICATION OF THE PERSONS WHO HAVE AGREED TO AND WILL BE RESPONSIBLE FOR LONG-TERM OPERATION AND MAINTENANCE OF THE PCSM BMP'S IN ACCORDANCE WITH § 102.8(M) AND PROOF OF COMPLIANCE WITH § 102.8(M)(2).

PRIOR TO ACCEPTING THE NOT, THE DEPARTMENT AND/OR CONSERVATION DISTRICT STAFF WILL PERFORM A FINAL INSPECTION AND APPROVE OR DENY THE NOTICE OF TERMINATION.

NOTES FOR PROJECTS DISCHARGING TO SPECIAL PROTECTION WATERSHEDS &/OR EXCEPTIONAL VALUE WETLANDS

1. THIS PROJECT IS IN A SPECIALLY PROTECTED HIGH QUALITY OR EXCEPTIONAL VALUE WATERSHED; EXTREME CARE SHOULD BE EXERCISED IN ALL DISTURBANCE ACTIVITIES TO PREVENT DEGRADATION TO THE WATERS OF THE COMMONWEALTH.
2. BECAUSE THIS PROJECT IS IN A SPECIALLY PROTECTED HIGH QUALITY OR EXCEPTIONAL VALUE WATERSHED, UPON COMPLETION OR TEMPORARY CESSATION OF EARTH DISTURBANCE ACTIVITIES, THE PROJECT SITE MUST BE IMMEDIATELY STABILIZED WITH THE APPROPRIATE TEMPORARY OR PERMANENT STABILIZATION.

MAINTENANCE NOTES

1. STOCKPILE HEIGHTS MUST NOT EXCEED 35'. STOCKPILE SLOPES MUST BE 2:1 OR FLATTER.
2. UPON COMPLETION OF AN EARTH DISTURBANCE ACTIVITY OR ANY STAGE OR PHASE OF AN ACTIVITY, THE OPERATOR SHALL STABILIZE IMMEDIATELY THE DISTURBED AREAS TO PROTECT FROM ACCELERATED EROSION. DURING NON-GERMINATING PERIODS, MULCH MUST BE APPLIED AT THE SPECIFIED RATES. DISTURBED AREAS WHICH ARE NOT AT FINISHED GRADE AND WHICH WILL BE REDISTURBED WITHIN 1 YEAR MAY BE STABILIZED IN ACCORDANCE WITH TEMPORARY SEEDING SPECIFICATIONS. DISTURBED AREAS, WHICH ARE EITHER AT FINISHED GRADE OR WILL NOT BE REDISTURBED WITHIN 1 YEAR, MUST BE STABILIZED IN ACCORDANCE WITH PERMANENT SEEDING SPECIFICATIONS.
3. SOIL STOCKPILES MUST BE STABILIZED IMMEDIATELY.
4. HAY OR STRAW MULCH MUST BE APPLIED AT RATES OF AT LEAST 3.0 TONS PER ACRE.
5. UNTIL THE SITE HAS ACHIEVED FINAL STABILIZATION THE OWNER AND/OR CONTRACTOR SHALL PROPERLY IMPLEMENT, OPERATE AND MAINTAIN ALL THE BEST MANAGEMENT PRACTICES. MAINTENANCE SHALL INCLUDE INSPECTIONS OF ALL EROSION AND SEDIMENTATION CONTROL AFTER EACH RUNOFF EVENT AND ON A WEEKLY BASIS. ALL PREVENTATIVE AND REMEDIAL MAINTENANCE WORK, INCLUDING CLEAN OUT, REPAIR, REPLACEMENT, REGRADING, RESEEDING, REMULCHING, AND RENETTING, MUST BE PERFORMED IMMEDIATELY.
6. AN AREA SHALL BE CONSIDERED TO HAVE ACHIEVED FINAL STABILIZATION WHEN IT HAS A MINIMUM UNIFORM 70% PERENNIAL VEGETATIVE COVER OR OTHER PERMANENT NON-VEGETATIVE COVER WITH A DENSITY SUFFICIENT TO RESIST ACCELERATED SURFACE EROSION AND SUBSURFACE CHARACTERISTICS SUFFICIENT TO RESIST SLIDING AND OTHER MOVEMENTS. IMMEDIATELY AFTER EARTH DISTURBANCE ACTIVITIES CEASE, THE OPERATOR SHALL STABILIZE ANY AREAS DISTURBED BY THE ACTIVITIES. DURING NON-GERMINATING PERIODS, MULCH MUST BE APPLIED AT THE SPECIFIED RATES. DISTURBED AREAS WHICH ARE NOT AT FINISHED GRADE AND WHICH WILL BE REDISTURBED WITHIN 1 YEAR MUST BE STABILIZED IN ACCORDANCE WITH THE TEMPORARY VEGETATIVE STABILIZATION SPECIFICATIONS. DISTURBED AREAS WHICH ARE AT FINISHED GRADE OR WHICH WILL NOT BE REDISTURBED WITHIN 1 YEAR MUST BE STABILIZED IN ACCORDANCE WITH THE PERMANENT VEGETATIVE STABILIZATION SPECIFICATIONS.
7. MULCH WITH MULCH CONTROL NETTING OR EROSION CONTROL BLANKETS MUST BE INSTALLED ON ALL SLOPES GREATER THAN 3:1.
8. UNTIL THE SITE IS STABILIZED, ALL EROSION AND SEDIMENTATION BMPS MUST BE MAINTAINED PROPERLY. MAINTENANCE MUST INCLUDE INSPECTIONS OF ALL EROSION AND SEDIMENTATION BMP'S AFTER EACH RUNOFF EVENT AND ON A WEEKLY BASIS. ALL SITE INSPECTIONS WILL BE DOCUMENTED IN AN INSPECTION LOG KEPT FOR THIS PURPOSE. THE COMPLIANCE ACTIONS AND THE DATE, TIME AND NAME OF THE PERSON CONDUCTING THE INSPECTION. THE INSPECTION LOG WILL BE KEPT ON SITE AT ALL TIMES AND MADE AVAILABLE TO THE DISTRICT UPON REQUEST.

ALL PREVENTIVE AND REMEDIAL MAINTENANCE WORK, INCLUDING CLEAN OUT, REPAIR, REPLACEMENT, REGRADING, RESEEDING, REMULCHING AND RENETTING, MUST BE PERFORMED IMMEDIATELY. IF EROSION AND SEDIMENTATION BMPS FAIL TO PERFORM AS EXPECTED, REPLACEMENT BMPS OR MODIFICATIONS OF THOSE INSTALLED WILL BE NEEDED.

WHERE BMPS ARE FOUND TO FAIL TO ALLEVIATE EROSION OR SEDIMENT POLLUTION, THE PERMITTEE OR CO-PERMITTEE SHALL INCLUDE THE FOLLOWING INFORMATION:

a. THE LOCATION AND SEVERITY OF THE BMP'S FAILURE AND ANY POLLUTION EVENTS.
b. ALL STEPS TAKEN TO, REDUCE, ELIMINATE AND PREVENT THE RECURRENCE OF THE NON-COMPLIANCE.
c. THE TIME FRAME TO CORRECT THE NON-COMPLIANCE, INCLUDING THE EXACT DATES WHEN THE ACTIVITY WILL RETURN TO COMPLIANCE.

AFTER FINAL SITE STABILIZATION HAS BEEN ACHIEVED, TEMPORARY EROSION AND SEDIMENT BMPS MUST BE REMOVED. AREAS DISTURBED DURING REMOVAL OF THE BMPS MUST BE STABILIZED IMMEDIATELY.

SEEDING AND SURFACE STABILIZATION

GENERAL SEEDING AND SURFACE STABILIZATION CRITERIA

1. DISTURBED AREAS ON WHICH ACTIVITIES HAVE BEEN COMPLETED OR WILL BE CEASED FOR MORE THAN 4 DAYS, OR ANY STAGE THEREOF, SHALL BE IMMEDIATELY STABILIZED WITH THE APPROPRIATE TEMPORARY OR PERMANENT STABILIZATION.
2. DURING NON-GERMINATION PERIODS, MULCH MUST BE APPLIED AT THE RATE SPECIFIED UNDER "STABILIZATION DURING NON-GERMINATION PERIODS."
3. DISTURBED AREAS WHICH ARE NOT FINISHED GRADE AND WILL BE REDISTRIBUTED WITHIN 1 YEAR MAY BE SEEDED AND MULCHED WITH A QUICK GROWING TEMPORARY SEED MIXTURE AND MULCH AS SPECIFIED UNDER "TEMPORARY VEGETATIVE SURFACE STABILIZATION."
4. DISTURBED AREAS WHICH ARE EITHER AT FINISHED GRADE OR WILL NOT BE REDISTURBED WITHIN ONE YEAR MUST BE SEEDED WITH A PERMANENT SEED MIXTURE AND MULCHED AS SPECIFIED UNDER "PERMANENT VEGETATIVE SURFACE STABILIZATION."
5. DIVERSION CHANNELS, TERRACES, INTERCEPTOR CHANNELS, CHANNELS OF CONVEYANCE, SEDIMENT BASINS, SEDIMENT TRAPS AND STOCKPILES MUST BE SEEDED AND MULCHED IMMEDIATELY AS SPECIFIED UNDER "PERMANENT VEGETATIVE SURFACE STABILIZATION."
6. AREAS WHICH ARE TO BE TOP-SOILED SHALL BE SCARIFIED TO A MINIMUM DEPTH OF 3 TO 5 INCHES (6 TO 12 INCHES ON COMPACTED SOILS) PRIOR TO PLACEMENT OF TOPSOIL. AREAS TO BE VEGETATED SHALL HAVE A MINIMUM 4 INCHES OF TOPSOIL IN PLACE PRIOR TO SEEDING AND MULCHING, I.E. YARDS.

STABILIZATION DURING NON-GERMINATION PERIODS

DURING NON-GERMINATION PERIODS, MULCH MUST BE APPLIED TO DISTURBED AREAS AT A RATE OF 3 TONS/ACRE. THE NON-GERMINATION PERIOD SHALL BE DETERMINED BASED ON CURRENT WEATHER CONDITIONS; IT IS GENERALLY THE PERIOD FROM OCTOBER 15 TO MARCH 15. AREAS MULCHED DURING NON-GERMINATION PERIODS MUST BE LIMED, FERTILIZED, SEEDED AND MULCHED IMMEDIATELY.

TEMPORARY VEGETATIVE SURFACE STABILIZATION

THE FOLLOWING ACTIVITIES SHALL BE UNDERTAKEN TO ACHIEVE TEMPORARY STABILIZATION OF ALL EXPOSED AND DISTURBED SOIL AREAS AS REQUIRED OR DIRECTED.

1. TILLING - UPON SUSPENSION OF GRADING ACTIVITIES IN DISTURBED AREAS, SURFACE SOIL SHALL BE TILLED AND LOOSED. TILLING MAY BE OMITTED IF SOIL IS SUFFICIENTLY LOOSE TO PERMIT SEEDING ACTIVITIES.
2. LIME APPLICATION - GROUND LIMESTONE SHALL BE APPLIED TO THE LOOSENED SOIL AT A UNIFORM RATE OF 46 POUNDS PER 1000 SQUARE FEET. THIS RATE IS IN POUNDS OF AGRICULTURAL GRADE LIMESTONE PER 1000 SQUARE FEET. (1 TON/ACRE × 1 AC./43,560 SQ. FT. = 46 LBS./1000 SQ. FT.)
3. FERTILIZER APPLICATION - 5-5-5 FERTILIZER SHALL BE APPLIED TO THE LOOSED SOIL AT A UNIFORM RATE OF 5 POUNDS PER 1000 SQUARE FEET.
4. TEMPORARY SEEDING - THE FOLLOWING SEED MIXTURE SHALL BE APPLIED TO THE PREPARED SOIL SURFACE BY BROADCAST SPREADERS OR HYDRAULIC APPLICATION ACCORDING TO THE FOLLOWING RATE:

ANNUAL RYE GRASS	
PURE SEED	95%
GERMINATION PERCENTAGE	85%
PURE LIVE SEED PERCENTAGE	81%
SEEDING RATE	4 LBS PLS PER 1000 SQUARE FEET.

AFTER MECHANICAL SEEDING, SEED SHALL BE COVERED BY MEANS OF LIGHT RAKING TO A DEPTH OF ONE-QUARTER INCH OF SOIL.

5. HAY OR STRAW MULCH SHALL BE APPLIED AT A RATE OF 3 TONS/ACRE.
   - HAY MULCH SHOULD BE ANCHORED IMMEDIATELY AFTER APPLICATION TO PREVENT BEING WINDBLOWN. A TRACTOR-DRAWN IMPLEMENT MAY BE USED TO "CRIMP" THE HAY INTO THE SOIL. THIS METHOD IS LIMITED TO SLOPES NO STEPPER THAN 3:1. THE MACHINERY SHOULD BE OPERATED ON THE CONTOUR (NOTE: CRIMPING OF HAY OR STRAW BY RUNNING OVER IT WITH TRACKED MACHINERY IS NOT RECOMMENDED.)
   - ASPHALT, EITHER EMULSIFIED OR CUT-BACK, CONTAINING NO SOLVENTS OR OTHER DILUTING AGENTS TOXIC TO PLANT OR ANIMAL LIFE, UNIFORMLY APPLIED AT A RATE OF 31 GALLONS PER 100 SQUARE YARDS MAY BE USED TO TACK MULCH.
   - SYNTHETIC BINDERS (CHEMICAL BINDERS) MAY BE USED AS RECOMMENDED BY THE MANUFACTURER TO ANCHOR MULCH, PROVIDED SUFFICIENT DOCUMENTATION IS PROVIDED TO SHOW THEY ARE NON-TOXIC TO NATIVE PLANT AND ANIMAL SPECIES.
   - LIGHTWEIGHT PLASTIC, FIBER OR PAPER NETS MAY BE STAPLED OVER MULCH ACCORDING TO THE MANUFACTURER'S RECOMMENDATIONS.

PERMANENT VEGETATIVE SURFACE STABILIZATION

THE FOLLOWING ACTIVITIES SHALL BE UNDERTAKEN TO ACHIEVE TEMPORARY STABILIZATION OF ALL EXPOSED AND DISTURBED SOIL AREAS AS REQUIRED OR DIRECTED.

1. TILLING - UPON COMPLETION OF GRADING ACTIVITIES IN DISTURBED AREAS, SURFACE SOIL SHALL BE TILLED AND LOOSED. TILLING MAY BE OMITTED IF SOIL IS SUFFICIENTLY LOOSE TO PERMIT SEEDING ACTIVITIES.
2. LIME APPLICATION - GROUND LIMESTONE SHALL BE APPLIED TO THE LOOSENED SOIL AT A UNIFORM RATE OF 184 POUNDS PER 1000 SQUARE FEET. THIS RATE IS IN POUNDS OF AGRICULTURAL GRADE LIMESTONE PER 1000 SQUARE FEET.
3. BASE FERTILIZER APPLICATION - FERTILIZER SHALL BE APPLIED TO THE SOIL AT THE RATE ESTABLISHED BY SOIL TESTING, AS REQUIRED TO ACCOMMODATE PROPER GROWTH OF THE SEED MIXTURE. AS A MINIMUM, 10-20-20 FERTILIZER SHALL BE APPLIED AT A UNIFORM RATE TO 25 POUNDS PER 1,000 SQUARE FEET.
4. MIXING - GROUND LIMESTONE AND FERTILIZER SHALL BE MIXED WITH THE SOIL TO A DEPTH OF FOUR INCHES THROUGH USE OF SUITABLE EQUIPMENT.
5. SEEDING - SEED MIXTURE SHALL BE APPLIED TO THE PREPARED SOIL SURFACE BY BROADCAST SPREADERS OR HYDRAULIC APPLICATION ACCORDING TO THE FOLLOWING RATES:

WITHIN INFILTRATION BASIN #1 BOTTOM:
RETENTION BASIN FLOOR MIX: ERNMX-126. APPLY PER MANUFACTURER'S SPECIFICATIONS

WITHIN RAIN GARDENS:
RAIN GARDEN MIX: ERNMX-180. APPLY PER MANUFACTURER'S SPECIFICATIONS

ALL OTHER DISTURBED AREAS:

KENTUCKY 31 TALL FESCUE	47%
PURE SEED	95%
GERMINATION PERCENTAGE	80%
PURE LIVE SEED PERCENTAGE	76%
SEEDING RATE	2 LBS PLS PER 1000 SQUARE FEET.
CREEPING REDTOP FESCUE	50%,
PURE SEED	95%
GERMINATION PERCENTAGE	80%
PURE LIVE SEED PERCENTAGE	76%
SEEDING RATE	4 LBS PLS PER 1000 SQUARE FEET.
REDTOP	3%
PURE SEED	92%
GERMINATION PERCENTAGE	80%
PURE LIVE SEED PERCENTAGE	74%
SEEDING RATE	1 LBS PLS PER 1000 SQUARE FEET.

AFTER SEEDING, SEED SHALL BE COVERED BY MEANS OF LIGHT RAKING TO A DEPTH OF ONE-QUARTER INCH OF SOIL.

6. HAY OR STRAW MULCH SHALL BE APPLIED AT A RATE OF 3 TONS/ACRE.
   - HAY MULCH SHOULD BE ANCHORED IMMEDIATELY AFTER APPLICATION TO PREVENT BEING WINDBLOWN. A TRACTOR-DRAWN IMPLEMENT MAY BE USED TO "CRIMP" THE HAY INTO THE SOIL. THIS METHOD IS LIMITED TO SLOPES NO STEPPER THAN 3:1. THE MACHINERY SHOULD BE OPERATED ON THE CONTOUR (NOTE: CRIMPING OF HAY OR STRAW BY RUNNING OVER IT WITH TRACKED MACHINERY IS NOT RECOMMENDED.)
   - ASPHALT, EITHER EMULSIFIED OR CUT-BACK, CONTAINING NO SOLVENTS OR OTHER DILUTING AGENTS TOXIC TO PLANT OR ANIMAL LIFE, UNIFORMLY APPLIED AT A RATE OF 31 GALLONS PER 100 SQUARE YARDS MAY BE USED TO TACK MULCH.
   - SYNTHETIC BINDERS (CHEMICAL BINDERS) MAY BE USED AS RECOMMENDED BY THE MANUFACTURER TO ANCHOR MULCH, PROVIDED SUFFICIENT DOCUMENTATION IS PROVIDED TO SHOW THEY ARE NON-TOXIC TO NATIVE PLANT AND ANIMAL SPECIES.
   - LIGHTWEIGHT PLASTIC, FIBER OR PAPER NETS MAY BE STAPLED OVER MULCH ACCORDING TO THE MANUFACTURER'S RECOMMENDATIONS.

CRITICAL VEGETATIVE AREA (CVA) SURFACE STABILIZATION (ALL SLOPES GREATER THAN 3:1)

AFTER EMBANKMENT SLOPES HAVE BEEN COMPACTED AND CUT SLOPES FINISH GRADED, AREA SHALL BE TOP DRESSED WITH A MINIMUM 4" OF TOPSOIL. SEED MIXTURE SHALL BE APPLIED TO THE PREPARED SOIL SURFACE BY HYDRAULIC APPLICATION ACCORDING TO THE FOLLOWING SUGGESTED RATES OF APPLICATION:

PERENNIAL RYEGRASS	40%
PURE SEED	95%
GERMINATION PERCENTAGE	85%
PURE LIVE SEED PERCENTAGE	81%
SEEDING RATE	1 LBS PLS PER 1000 SQUARE FEET.
CROWN VETCH	20%,
PURE SEED	98%
GERMINATION PERCENTAGE	65%
PURE LIVE SEED PERCENTAGE	64%
SEEDING RATE	0.5 LBS PLS PER 1000 SQUARE FEET.
SPREADING FESCUE	40%
PURE SEED	95%
GERMINATION PERCENTAGE	80%
PURE LIVE SEED PERCENTAGE	76%
SEEDING RATE	1 LBS PLS PER 1000 SQUARE FEET.

AFTER SEEDING APPLICATION HAS BEEN COMPLETED, INSTALL NORTH AMERICAN GREEN EROSION CONTROL BLANKET SC-150 USING STAPLE PATTERN C.

SOILS LEGEND

Ba - BAILE SILT LOAM
GgC - GLENELG SILT LOAM, 8 TO 15 PERCENT SLOPES
GdD - GLENELG SILT LOAM, 15 TO 25 PERCENT SLOPES
MaC - MANOR LOAM, 8 TO 15 PERCENT SLOPES
MaD - MANOR LOAM, 15 TO 25 PERCENT SLOPES
UugB - URBAN LAND-UDORTHENTS, SCHIST AND GNEISS COMPLEX, 0 TO 8 PERCENT SLOPES

SOILS RESOLUTIONS

CUTBACKS CAVE - CAUTION SHOULD BE TAKEN TO LIMIT THE AMOUNT OF TRENCH THAT IS OPEN AT ANY GIVEN TIME. SHORING SHOULD BE USED AS RECOMMENDED BY THE RESPECTIVE GOVERNMENTAL SAFETY AGENCIES.

DEPTH TO SATURATED/ SEASONAL HIGH WATER TABLE - IF GROUNDWATER IS ENCOUNTERED DURING CONSTRUCTION, THE AREA WILL BE DE-WATERED BY PUMPING THE GROUNDWATER INTO A □PUMPED WATER FILTER BAG□ SILT CONTROL SYSTEM.

LOW STRENGTH / LANDSLIDE PRONE - IF SOILS ARE NOT SUITABLE FOR THE SPECIFIC ONSITE APPLICATION, AS DETERMINED BY INSPECTION BY THE CONTRACTOR, THEN SUITABLE SOIL SHALL BE DERIVED FROM SUITABLE ONSITE MATERIAL OR IMPORTED.

PIPING - THE DETENTION BASIN BERM SHALL BE PROVIDED WITH A CLAY CORE AND COMPACTED TO 98% MODIFIED PROCTOR. ADDITIONALLY, AN EXTRA ANTI-SEEP COLLAR SHALL BE PROVIDED ALONG THE OUTLET PIPE.

SHRINK-SWELL/FROST ACTION - IF WINTER GRADING IS UNAVOIDABLE, EXCAVATION SHALL TAKE PLACE WHEN THE TEMPERATURE IS ABOVE FREEZING AND THE SOIL IS DRY.

POOR SOURCE OF TOPSOIL (SLOPE) - TRENCH AREAS SHALL BE IMMEDIATELY STABILIZED AND COVERED WITH AN EROSION CONTROL BLANKET.

POOR SOURCE OF TOPSOIL (TOO ACID) - A REPRESENTATIVE SOIL TEST SHALL BE PERFORMED TO DETERMINE THE NECESSARY AMOUNT OF LIME TO BE USED.

CLEAN FILL AND ENVIRONMENTAL DUE DILIGENCE

IF THE SITE WILL NEED TO IMPORT OR EXPORT MATERIAL FROM THE SITE, THE RESPONSIBILITY FOR PERFORMING ENVIRONMENTAL DUE DILIGENCE AND DETERMINATION OF CLEAN FILL WILL REST WITH THE CONTRACTOR (RESPONSIBLE PARTY).

CLEAN FILL IS DEFINED AS: UNCONTAMINATED, NON-WATER SOLUBLE, NON-DECOMPOSABLE, INERT, SOLID MATERIAL. THE TERM INCLUDES SOIL, ROCK, STONE, DREDGED MATERIAL, USED ASPHALT, AND BRICK, BLOCK OR CONCRETE FROM CONSTRUCTION AND DEMOLITION ACTIVITIES THAT IS SEPARATE FROM OTHER WASTE AND IS RECOGNIZABLE AS SUCH. THE TERM DOES NOT INCLUDE MATERIALS PLACED IN OR ON THE WATERS OF THE COMMONWEALTH UNLESS OTHERWISE AUTHORIZED. (THE TERM "USED ASPHALT" DOES NOT INCLUDE MILLED ASPHALT OR ASPHALT THAT HAS BEEN PROCESSED FOR RE-USE.).

CLEAN FILL THAT HAS BEEN AFFECTED BY A SPILL OR RELEASE OF A REGULATED SUBSTANCE: FILL AREAS AFFECTED BY A SPILL OR RELEASE OF A REGULATED SUBSTANCE STILL QUALIFIES AS CLEAN FILL PROVIDED THE TESTING REVEALS THAT THE FILL MATERIAL CONTAINS CONCENTRATIONS OF REGULATED SUBSTANCES THAT ARE BELOW THE RESIDENTIAL LIMITS IN TABLES FP-1A AND FP-1B FOUND IN THE DEPARTMENT'S POLICY "MANAGEMENT OF FILL." ANY PERSON PLACING CLEAN FILL THAT HAS BEEN AFFECTED BY A SPILL OR RELEASE OF A REGULATED SUBSTANCE MUST USE FORM FP-001 TO CERTIFY THE ORIGIN OF THE FILL MATERIAL AND THE RESULTS OF THE ANALYTICAL TESTING TO QUALIFY THE MATERIAL AS CLEAN FILL. FORM FP-001 MUST BE RETAINED BY THE PROPERTY OWNER FOR ANY FILL MATERIAL AFFECTED BY A SPILL OR RELEASE OF A REGULATED SUBSTANCE BUT QUALIFYING AS CLEAN FILL DUE TO ANALYTICAL TESTING.

ENVIRONMENTAL DUE DILIGENCE: THE APPLICANT MUST PERFORM ENVIRONMENTAL DUE DILIGENCE TO DETERMINE IT THE FILL MATERIALS ASSOCIATED WITH THE PROJECT QUALIFY AS CLEAN FILL.

ENVIRONMENTAL DUE DILIGENCE IS DEFINED AS: INVESTIGATIVE TECHNIQUES, INCLUDING, BUT NOT LIMITED TO, VISUAL PROPERTY INSPECTIONS, ELECTRONIC DATA BASE SEARCHES, REVIEW OF PROPERTY OWNERSHIP, REVIEW OF PROPERTY USE HISTORY, SANBORN MAPS, ENVIRONMENTAL QUESTIONNAIRES, TRANSACTION SCREENS, ANALYTICAL TESTING, ENVIRONMENTAL ASSESSMENTS OR AUDITS. ANALYTICAL TESTING IS NOT A REQUIRED PART OF DUE DILIGENCE UNLESS VISUAL INSPECTION AND/OR REVIEW OF THE PAST LAND USE OF THE PROPERTY INDICATES THAT THE FILL MAY HAVE BEEN SUBJECTED TO A SPILL OR RELEASE OF A REGULATED SUBSTANCE. IF THE FILL MAY HAVE BEEN AFFECTED BY A SPILL OR RELEASE OF A REGULATED SUBSTANCE, IT MUST BE TESTED TO DETERMINE IF IT QUALIFIES AS CLEAN FILL. TESTING SHOULD BE PERFORMED IN ACCORDANCE WITH APPENDIX A OF THE DEPARTMENT'S POLICY "MANAGEMENT OF CLEAN FILL." FILL MATERIAL THAT DOES NOT QUALIFY AS CLEAN FILL IS REGULATED FILL. REGULATED FILL IS WASTE AND MUST BE MANAGED IN ACCORDANCE WITH THE DEPARTMENT'S MUNICIPAL OR RESIDUAL WASTE REGULATIONS BASED ON 25 PA CODE CHAPTERS 287 RESIDUAL WASTE MANAGEMENT OR 271 MUNICIPAL WASTE MANAGEMENT, WHICHEVER IS APPLICABLE. THESE REGULATIONS ARE AVAILABLE ON-LINE AT WWW.PACODE.COM.

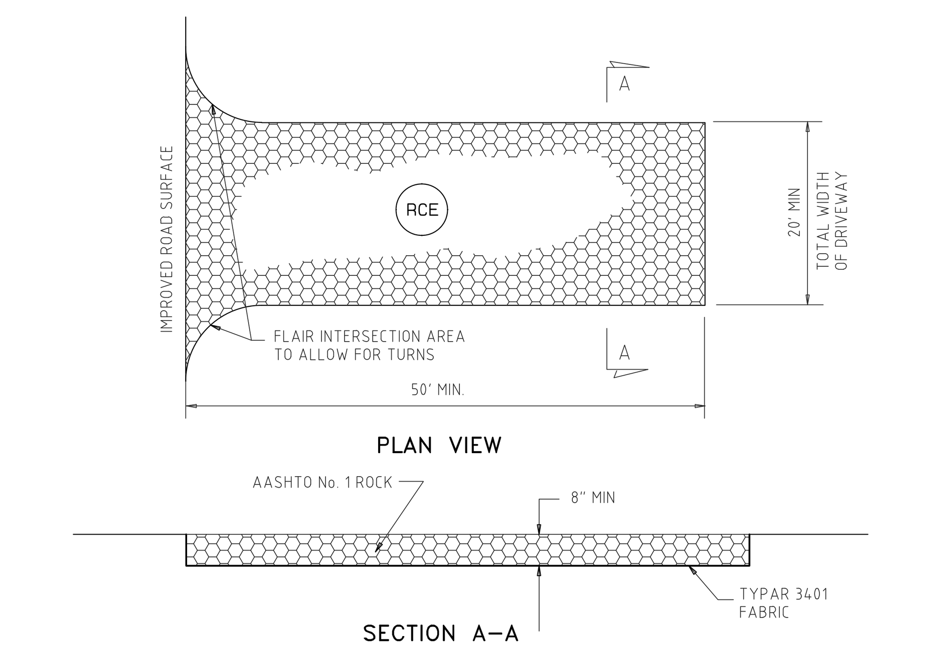

NOTE - THE THICKNESS SHALL BE CONSTANTLY MAINTAINED TO THE SPECIFIED DIMENSION BY ADDING ROCK. A STOCKPILE OF ROCK MATERIAL SHALL BE MAINTAINED ON THE SITE FOR THIS PURPOSE. AT THE END OF EACH CONSTRUCTION DAY, ALL THE SEDIMENT DEPOSITED ON PUBLIC ROADWAYS, SHALL BE REMOVED AND RETURNED TO THE CONSTRUCTION SITE. WASHING OF THE ROADWAY IS NOT PERMITTED.

ROCK CONSTRUCTION ENTRANCE

NOT TO SCALE

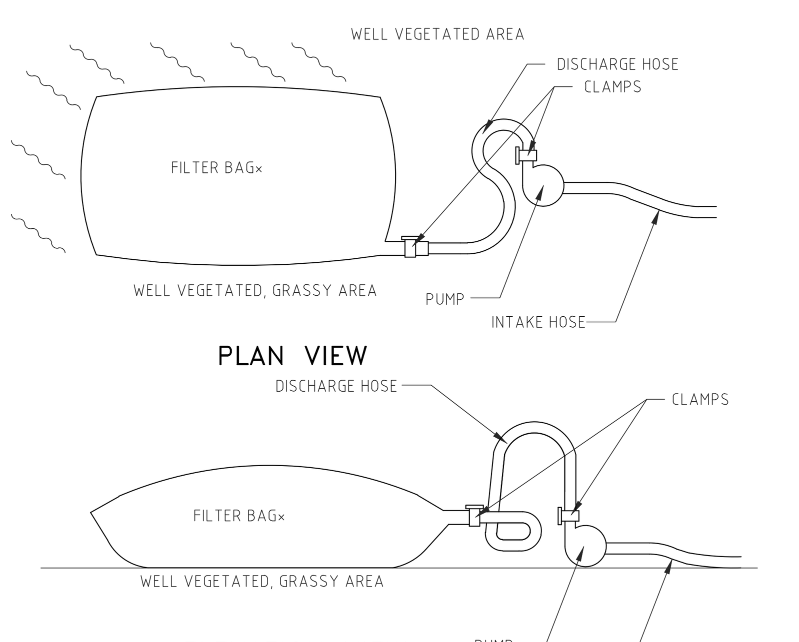

STANDARD CONSTRUCTION DETAIL #26 PUMPED WATER FILTER BAG

MATCH LINE A-A

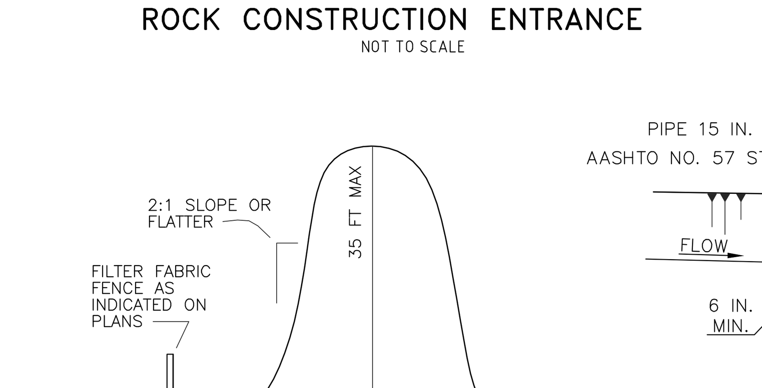

NOTES -
1) STOCKPILES TO BE STABILIZED IMMEDIATELY.
2) STOCKPILE HEIGHTS MUST NOT EXCEED 35'.
3) STOCKPILE SLOPES MUST BE 2:1 OR FLATTER.

TEMPORARY STOCKPILE DETAIL

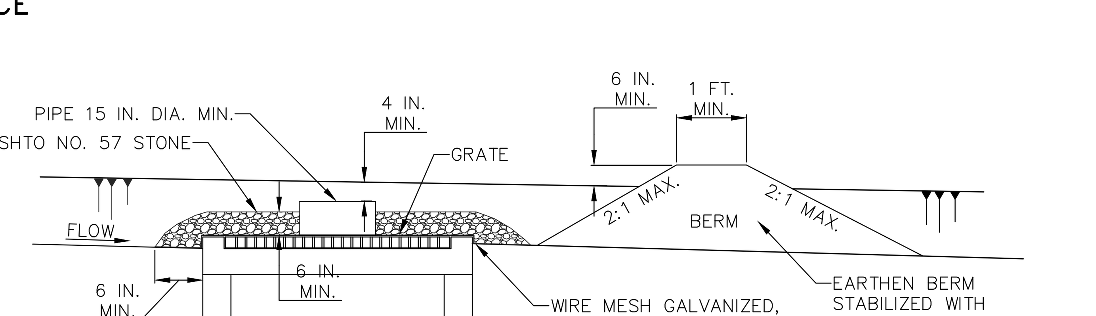

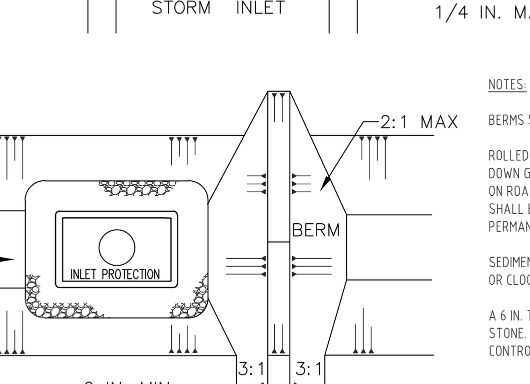

NOTES:

BERMS SHALL BE REQUIRED FOR ALL INSTALLATIONS NOT LOCATED AT A LOW POINT.

ROLLED EARTHEN BERM IN ROADWAY SHALL BE PROVIDED AND MAINTAINED IMMEDIATELY DOWN GRADIENT OF THE PROTECTED INLET UNTIL ROADWAY IS STONED. ROAD SUBBASE BERM ON ROADWAY SHALL BE MAINTAINED UNTIL ROADWAY IS PAVED. EARTHEN BERM IN CHANNEL SHALL BE MAINTAINED UNTIL PERMANENT STABILIZATION IS COMPLETED OR TO REMAIN PERMANENTLY.

SEDIMENT SHALL BE REMOVED WHEN IT REACHES HALF THE HEIGHT OF THE STONE. DAMAGED OR CLOGGED INSTALLATIONS SHALL BE REPAIRED OR REPLACED IMMEDIATELY.

A 6 IN. THICK COMPOST LAYER SHALL BE SECURELY ANCHORED ON OUTSIDE AND OVER TOP OF STONE. COMPOST SHALL MEET THE STANDARDS IN TABLE 4.2 OF THE PA DEP EROSION CONTROL MANUAL.

TYPE M INLET PROTECTION DETAIL

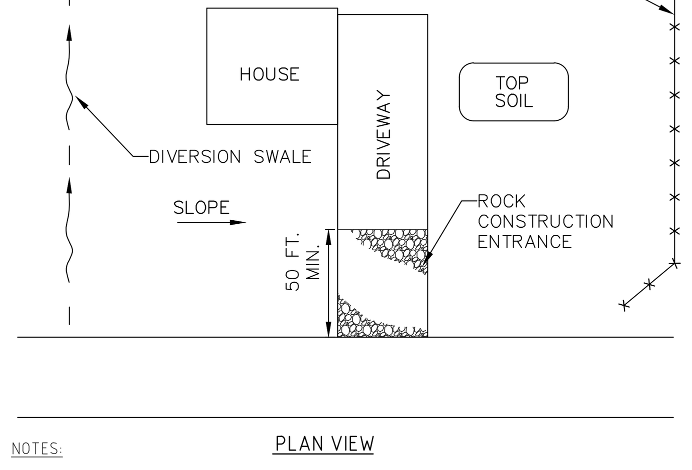

PLAN VIEW

NOTES:

THE AREA DOWNSLOPE OF THE FILTER FENCE/COMPOST SOCK BARRIER/SEDIMENT FILTER LOG MAY NOT BE UNDER DEVELOPMENT OR OTHERWISE DISTURBED.

THE UPSLOPE DIVERSION CHANNEL SHOULD BE INSTALLED WHEREVER RUNOFF FROM AREAS ABOVE THE LOT ARE NOT OTHERWISE DIVERTED AWAY FROM THE LOT. THE CHANNEL SHOULD BE PROPERLY SIZED AND PROVIDED WITH A SUITABLE PROTECTIVE LINING. THE DESIGNER AND/OR CONTRACTOR MUST EXERCISE CAUTION TO PROTECT ALL DOWNSTREAM PROPERTY OWNERS WHEN SELECTING A DISCHARGE POINT FOR THIS CHANNEL.

IN AREAS WHERE SLOPE IS AT AN OBLIQUE ANGLE TO THE ROADWAY, BMPS SHALL BE ADJUSTED ACCORDINGLY.

DIVERSION CHANNEL MAY OUTLET TO ROADSIDE DITCH OR STORM SEWER SYSTEM, BUT NOT ONTO STREET OR ROADWAY.

TYPICAL ON-LOT BMPs FOR LOT ALONG ASCENDING OR DESCENDING ROADWAY

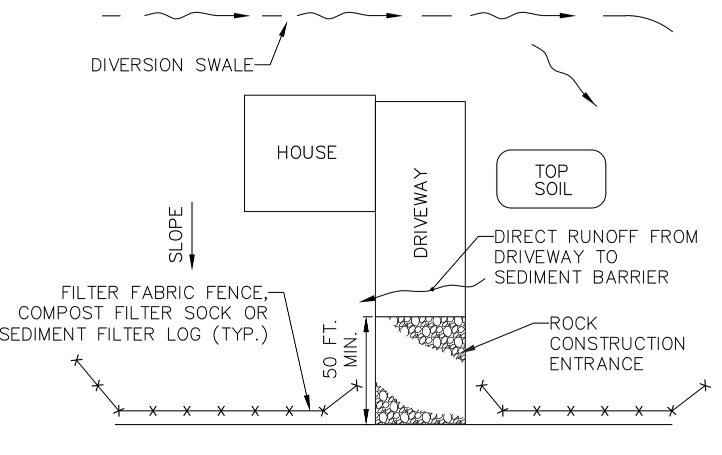

PLAN VIEW

NOTES:

THE UPSLOPE DIVERSION CHANNEL SHOULD BE INSTALLED WHEREVER THE LOT EXTENDS MORE THAN 150 FEET ABOVE THE ROADWAY OR WHERE RUNOFF FORM AREAS ABOVE THE LOT IS NOT OTHERWISE DIVERTED AWAY FROM THE LOT. THE CHANNEL SHOULD BE PROPERLY SIZED AND PROVIDED WITH A SUITABLE PROTECTIVE LINING. THE DESIGNER AND/OR CONTRACTOR MUST EXERCISE CAUTION TO PROTECT ALL DOWNSTREAM PROPERTY OWNERS WHEN SELECTING A DISCHARGE POINT FOR THIS CHANNEL.

TYPICAL ON-LOT BMPs FOR LOT ABOVE ROADWAY

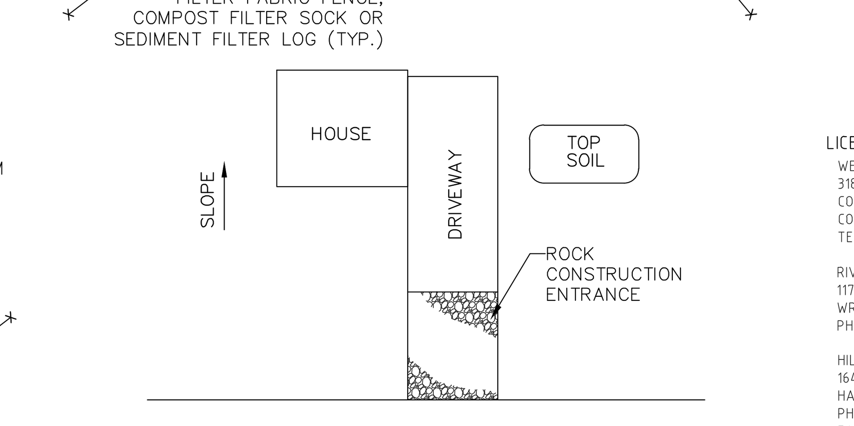

PLAN VIEW

NOTES:

THE AREA DOWNSLOPE OF THE FILTER FENCE/COMPOST SOCK BARRIER/SEDIMENT FILTER LOG MAY NOT BE UNDER DEVELOPMENT OR OTHERWISE DISTURBED.

TYPICAL ON-LOT BMPs FOR LOT BELOW ROADWAY

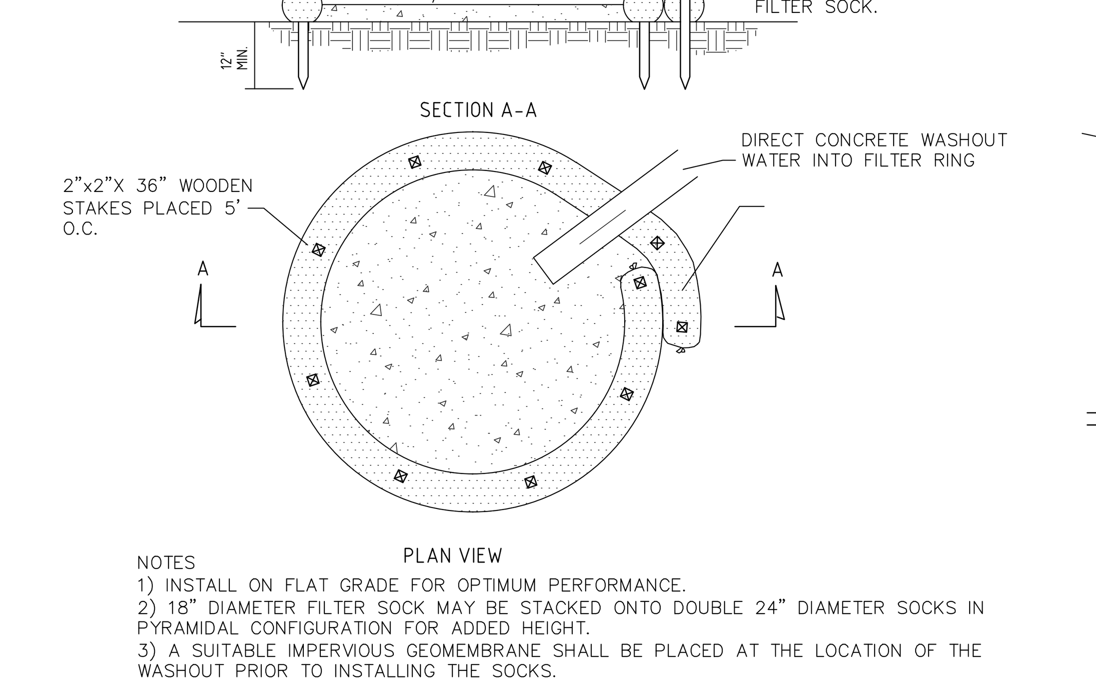

NOTES
1) INSTALL ON FLAT GRADE FOR OPTIMUM PERFORMANCE.
2) 18" DIAMETER FILTER SOCK MAY BE STACKED ONTO DOUBLE 24" DIAMETER SOCKS IN PYRAMIDAL CONFIGURATION FOR ADDED HEIGHT.
3) A SUITABLE IMPERVIOUS GEOMEMBRANE SHALL BE PLACED AT THE LOCATION OF THE WASHOUT PRIOR TO INSTALLING THE SOCKS.

COMPOST SOCK CONCRETE WASHOUT DETAIL

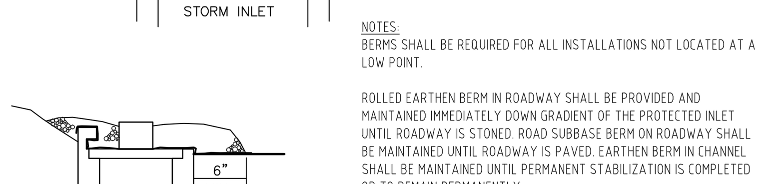

NOTES:

BERMS SHALL BE REQUIRED FOR ALL INSTALLATIONS NOT LOCATED AT A LOW POINT.

ROLLED EARTHEN BERM IN ROADWAY SHALL BE PROVIDED AND MAINTAINED IMMEDIATELY DOWN GRADIENT OF THE PROTECTED INLET UNTIL ROADWAY IS STONED. ROAD SUBBASE BERM ON ROADWAY SHALL BE MAINTAINED UNTIL ROADWAY IS PAVED. EARTHEN BERM IN CHANNEL SHALL BE MAINTAINED UNTIL PERMANENT STABILIZATION IS COMPLETED OR TO REMAIN PERMANENTLY.

SEDIMENT SHALL BE REMOVED WHEN IT REACHES HALF THE HEIGHT OF THE STONE. DAMAGED OR CLOGGED INSTALLATIONS SHALL BE REPAIRED OR REPLACED IMMEDIATELY.

A 6 IN. THICK COMPOST LAYER SHALL BE SECURELY ANCHORED ON OUTSIDE AND OVER TOP OF STONE. COMPOST SHALL MEET THE STANDARDS IN TABLE 4.2 OF THE PA DEP EROSION CONTROL MANUAL.

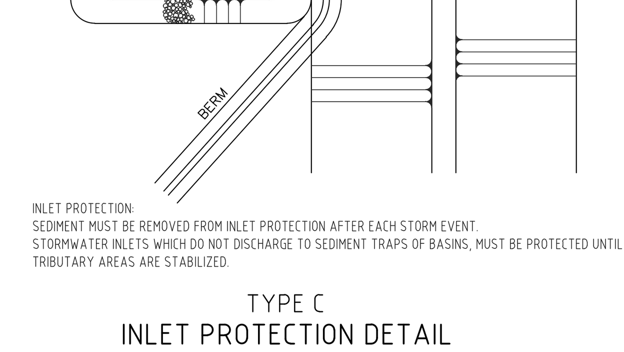

INLET PROTECTION:
SEDIMENT MUST BE REMOVED FROM INLET PROTECTION AFTER EACH STORM EVENT.
STORMWATER INLETS WHICH DO NOT DISCHARGE TO SEDIMENT TRAPS OF BASINS, MUST BE PROTECTED UNTIL THE TRIBUTARY AREAS ARE STABILIZED.

TYPE C INLET PROTECTION DETAIL

LICENSED CONTRACTORS:

WEAVER MULCH
3186 STRASBURG RD
COATSVILLE, PA 19320
CONTACT: JAMES WEAVER
TEL: 610-383-6818

RIVER VALLEY ORGANICS
1178 NURSERY ROAD
WRIGHTSVILLE, PA 17368
PHONE: 888-496-1266

HILLTOP SERVICE INC.
16403 POTTSVILLE PIKE
HAMBURG, PA 19526
PHONE: 610-562-3124
FAX: 610-562-9653
EMAIL: HILLTOPSERVICE@COMCAST.NET

EAST COAST EROSION BLANKETS
555 MOUNTAIN HOME ROAD
SINKING SPRING, PA 19608
PHONE: 800-582-4005 OR 610-927-0757

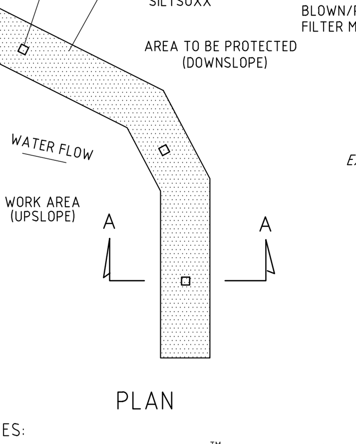

PLAN

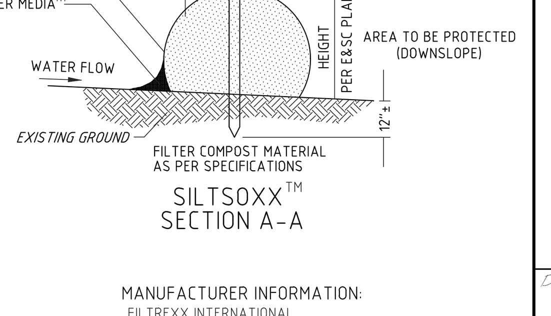

SILTSOXX™ SECTION A-A

MANUFACTURER INFORMATION:
FILTREXX INTERNATIONAL
35481 GRAFTON EASTERN ROAD
GRAFTON, OHIO 440044
PHONE: 448-926-8041

NOTES:
1. ALL MATERIAL TO MEET FILTREXX™ SPECIFICATIONS.
2. SILTSOXX™ COMPOST TO MEET APPLICATION REQUIREMENTS.
3. THE COMPOST MATERIAL TO BE DISPERSED ON SITE, AS DETERMINED BY THE ENGINEER.

FILTREXX™ SILTSOXX™ DETAIL

Revision	Date	Description	Rev.By
4	2/5/20	REVISED PER TOWNSHIP COMMENTS	MDH
3	12/20/19	REVISED PER TOWNSHIP COMMENTS	MDH
2	10/23/19	REVISED PER TOWNSHIP COMMENTS	MDH
1	7/24/19	REVISED PER TOWNSHIP COMMENTS	MDH

THIS DOCUMENT AND ALL INFORMATION AND WORK PRODUCT REPRESENTED BY AND CONTAINED HEREIN, IS THE SOLE AND EXCLUSIVE PROPERTY OF DH ENTERPRISES, INC. THE INFORMATION CONTAINED HEREIN IS LICENSED ONLY FOR LIMITED USE BY THE INTENDED RECIPIENT, AND NO LICENSE, PERMISSION OR AUTHORITY IS EXTENDED DIRECTLY OR IMPLIED, TO ANY PARTY WITHOUT THE EXPRESS WRITTEN PERMISSION OF DH ENTERPRISES, INC. COPYRIGHT, 2019, DH ENTERPRISES. ALL RIGHTS RESERVED

DH Enterprises
a civil engineering design & management firm
2815 PENN AVENUE
WEST LAWN, PA
610-927-4242

SEAL: COMMONWEALTH OF PENNSYLVANIA — REGISTERED PROFESSIONAL ENGINEER — MICHAEL DUAIN HARTMAN — No. PE059897

"TROUTBECK FARMS" PRELIMINARY PLAN E&SC DETAILS AND NOTES

CLIENT: MOSER CONSTRUCTION MANAGEMENT, LLC.
LOCATION: WILLISTOWN TOWNSHIP, CHESTER COUNTY, PENNSYLVANIA
DATE: JUNE 1, 2018

DRAWN BY: M.D.HARTMAN
PROJ. MANAGER: M.D.HARTMAN
SCALE: ---
SHEET: 18 of 25
PLAN NO. 17032-P-D-7.3

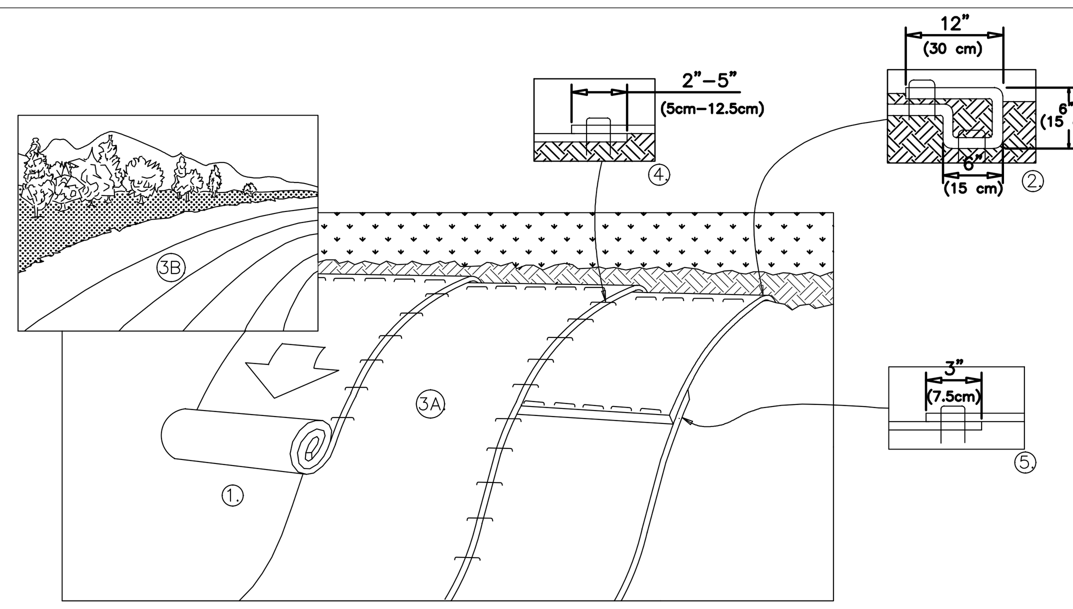

NOTES
1. PREPARE SOIL BEFORE INSTALLING BLANKETS, INCLUDING ANY NECESSARY APPLICATION OF LIME, FERTILIZER, AND SEED. NOTE: WHEN USING CELL-O-SEED DO NOT SEED PREPARED AREA. CELL-O-SEED MUST BE INSTALLED WITH PAPER SIDE DOWN.
2. BEGIN AT THE TOP OF THE SLOPE BY ANCHORING THE BLANKET IN A 6" (15cm) DEEP X 6" (15cm) WIDE TRENCH WITH APPROXIMATELY 12" (30cm) OF BLANKET EXTENDED BEYOND THE UP-SLOPE PORTION OF THE TRENCH. ANCHOR THE BLANKET WITH A ROW OF STAPLES/STAKES APPROXIMATELY 12" (30cm) APART IN THE BOTTOM OF THE TRENCH. BACKFILL AND COMPACT THE TRENCH AFTER STAPLING. APPLY SEED TO COMPACTED SOIL AND FOLD REMAINING 12" (30cm) PORTION OF BLANKET BACK OVER SEED AND COMPACTED SOIL. SECURE BLANKET OVER COMPACTED SOIL WITH A ROW OF STAPLES/STAKES SPACED APPROXIMATELY 12" (30cm) APART ACROSS THE WIDTH OF THE BLANKET.
3. ROLL THE BLANKETS (A.) DOWN OR (B.) HORIZONTALLY ACROSS THE SLOPE. BLANKETS WILL UNROLL WITH APPROPRIATE SIDE AGAINST THE SOIL SURFACE. ALL BLANKETS MUST BE SECURELY FASTENED TO SOIL SURFACE BY PLACING STAPLES/STAKES IN APPROPRIATE LOCATIONS AS SHOWN IN THE STAPLE PATTERN GUIDE. WHEN USING OPTIONAL DOT SYSTEM, STAPLES/STAKES SHOULD BE PLACED THROUGH EACH OF THE COLORED DOTS CORRESPONDING TO THE APPROPRIATE STAPLE PATTERN.
4. THE EDGES OF PARALLEL BLANKETS MUST BE STAPLED WITH APPROXIMATELY 2"-5" (5cm-12.5cm) OVERLAP DEPENDING ON BLANKET TYPE. TO ENSURE PROPER SEAM ALIGNMENT, PLACE THE EDGE OF THE OVERLAPPING BLANKET (BLANKET BEING INSTALLED ON TOP) EVEN WITH THE COLORED SEAM STITCH ON THE PREVIOUSLY INSTALLED BLANKET.
5. CONSECUTIVE BLANKETS SPLICED DOWN THE SLOPE MUST BE PLACED END OVER END (SHINGLE STYLE) WITH AN APPROXIMATE 3" (7.5cm) OVERLAP. STAPLE THROUGH OVERLAPPED AREA, APPROXIMATELY 12" (30cm) APART ACROSS ENTIRE BLANKET WIDTH. NOTE: ×IN LOOSE SOIL CONDITIONS, THE USE OF STAPLE OR STAKE LENGTHS GREATER THAN 6" (15cm) MAY BE NECESSARY TO PROPERLY SECURE THE BLANKETS.

SLOPE PROTECTION INSTALLATION DETAIL

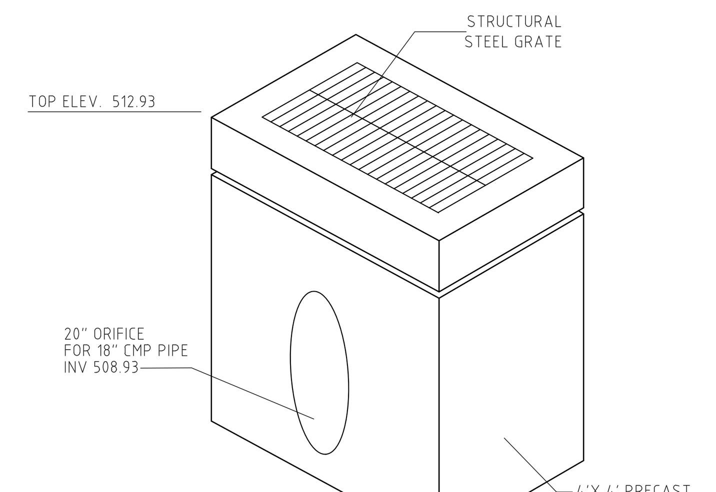

NOTES
1. PROVIDE MANHOLE STEPS IN ACCORDANCE WITH PennDOT RC-39.
2. OUTLET STRUCTURE MANUFACTURED BY TERRE HILL CONCRETE PRODUCTS (800) 242-1509, OR APPROVED EQUAL.

DETENTION BASIN OUTLET STRUCTURE (OS-1)

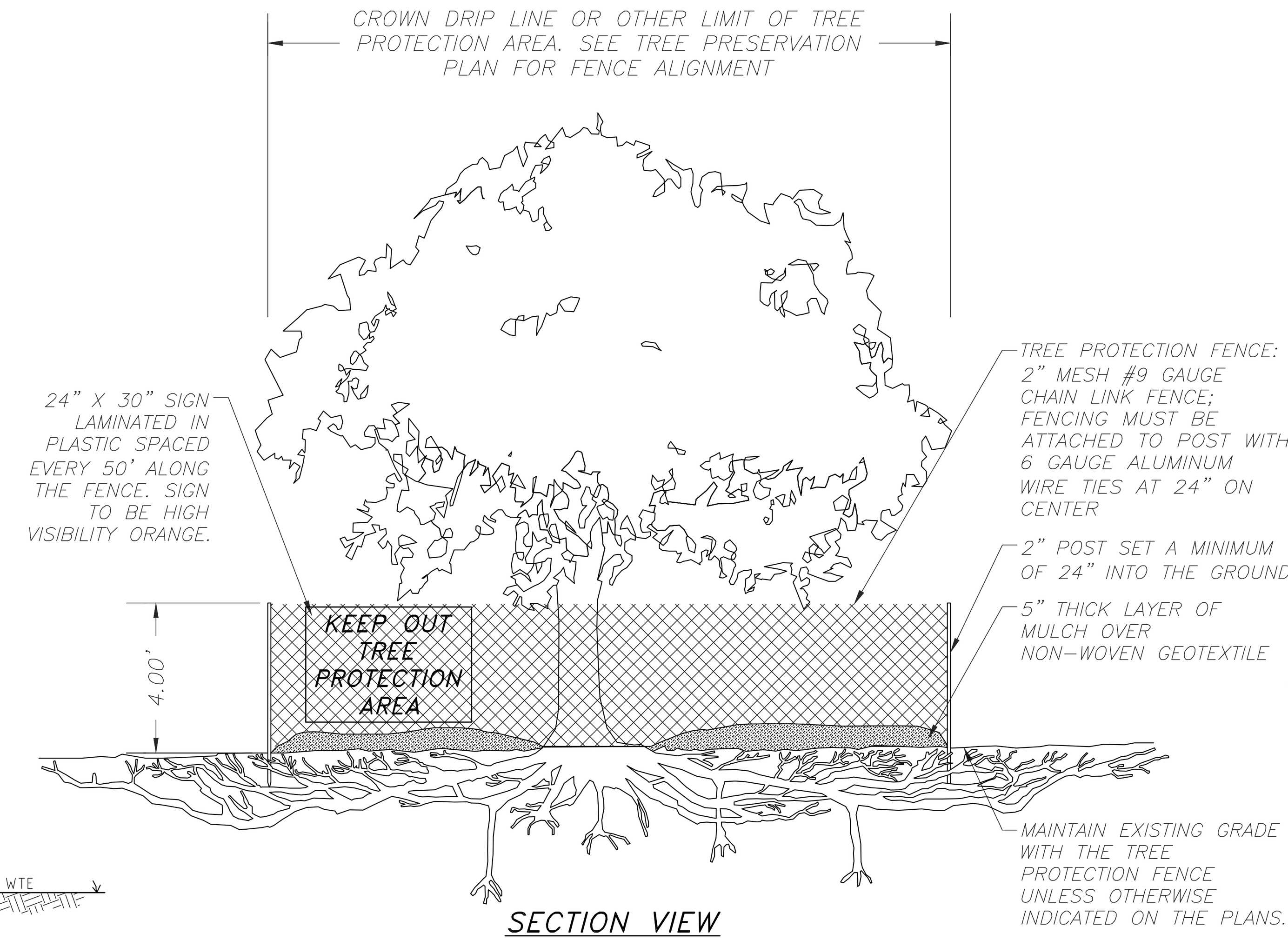

NOTES:
1. *SEE SPECIFICATIONS FOR ADDITIONAL TREE PROTECTION REQUIREMENTS.*
2. *IF THERE IS NO EXISTING IRRIGATION, SEE SPECIFICATIONS FOR WATERING REQUIREMENTS.*
3. *NO PRUNING SHALL BE PERFORMED EXCEPT BY APPROVED ARBORIST.*
4. *NO EQUIPMENT SHALL OPERATE INSIDE THE PROTECTIVE FENCING INCLUDING DURING FENCE INSTALLATION AND REMOVAL.*
5. *SEE SITE PREPARATION PLAN FOR ANY MODIFICATIONS WITH THE TREE PROTECTION AREA.*

TREE PROTECTION DETAIL

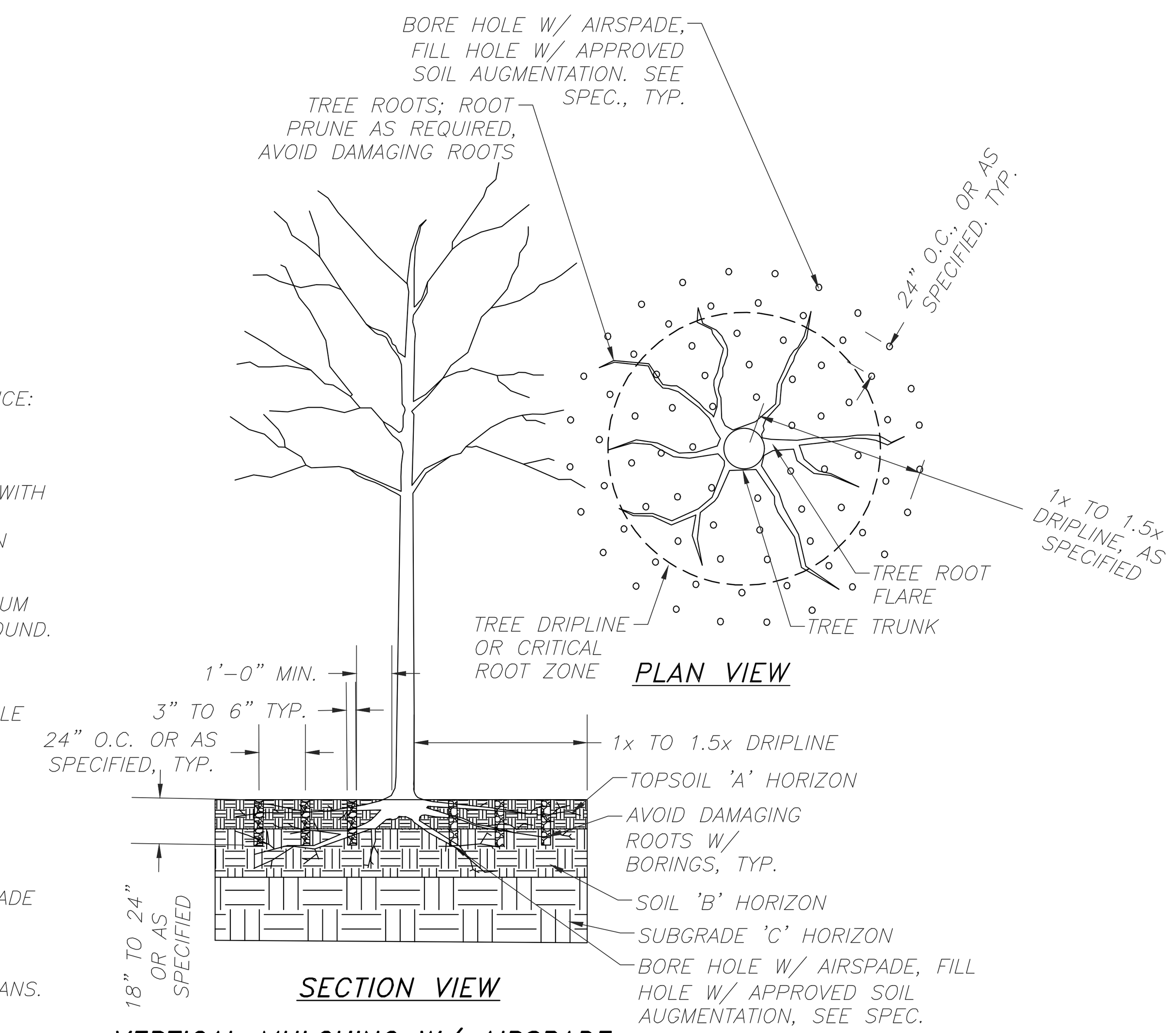

VERTICAL MULCHING W/ AIRSPADE

NOTES:
1. *DEPTH AND SPACING OF BORE HOLES TO BE DETERMINED BY LANDSCAPE ARCHITECT AND/OR CERTIFIED ARBORIST BASED ON INITIAL SITE INVESTIGATION. SPECIFIED BORE HOLE DEPTH MAY RANGE FROM 18" TO 36" AND SHOULD BE SPECIFIED BASED ON INDIVIDUAL SITE CONDITIONS AND TREE HEALTH CARE NEEDS.*
2. *USE AIRSPADE TO BARE-ROOT IMPACTED PLANTINGS DURING SOIL AERATION. STOCKPILE, PROTECT AND WATER PLANTS AS NECESSARY, AND ENSURE PROPER REPLANTING OR REPLACEMENT AT COMPLETION OF WORK.*
3. *ALL WORK TO BE DONE UNDER THE SUPERVISION OF CERTIFIED ARBORIST OR APPROVED CONTRACTOR. ENSURE THAT TREES ARE IN GOOD HEALTH AND NOT EXPERIENCING UNUSUAL STRESS PRIOR TO COMMENCING WORK.*
4. *PROTECT TREES AND TREE ROOTS THROUGHOUT CONSTRUCTION. AIRSPADE OR HAND DIG ONLY WITHIN THE CRITICAL ROOT ZONE. DOCUMENT AND ASSESS ALL DAMAGES TO TREES AT COMMENCEMENT AND THROUGH COMPLETION OF WORK. DAMAGES TO BE COMPENSATED BASED UPON PRE-AGREED TERMS. SEE SPECIFICATIONS.*
5. *ENSURE PROPER SOIL MOISTURE LEVELS THROUGH DURATION OF WORK. SOIL MUST BE NEAR FIELD CAPACITY, BUT NOT SATURATED, AND PASS A FIELD MOISTURE TEST PRIOR TO USE OF AN AIRSPADE. HAND WATER TREES AS NECESSARY BEFORE COMMENCEMENT OF WORK AND WITHIN 24 HOURS OF COMPLETION. COVER BARE ROOTS AND WATER AS NECESSARY DURING WORK.*
6. *ARBORIST TO EVALUATE THE OVERALL HEALTH OF TREES, AND TO MAKE A REPORT AND RECOMMENDATIONS FOR ADDITIONAL TREE CARE BEFORE, DURING, AND AFTER THE COMPLETION OF WORK.*
7. *CALL 811 OR CONTACT THE APPROPRIATE LOCAL AGENCIES TO LOCATE EXISTING UTILITIES PRIOR TO ANY EXCAVATION. PROTECT EXISTING UTILITIES THROUGHOUT THE CONSTRUCTION PROCESS AND REPAIR ANY DAMAGE TO THESE AT NO COST TO THE OWNER.*
8. *SEE SPECIFICATIONS FOR ANY ADDITIONAL INFORMATION, ALSO SEE MANUFACTURER'S GUIDE FOR PROPER SAFETY AND OPERATION.*

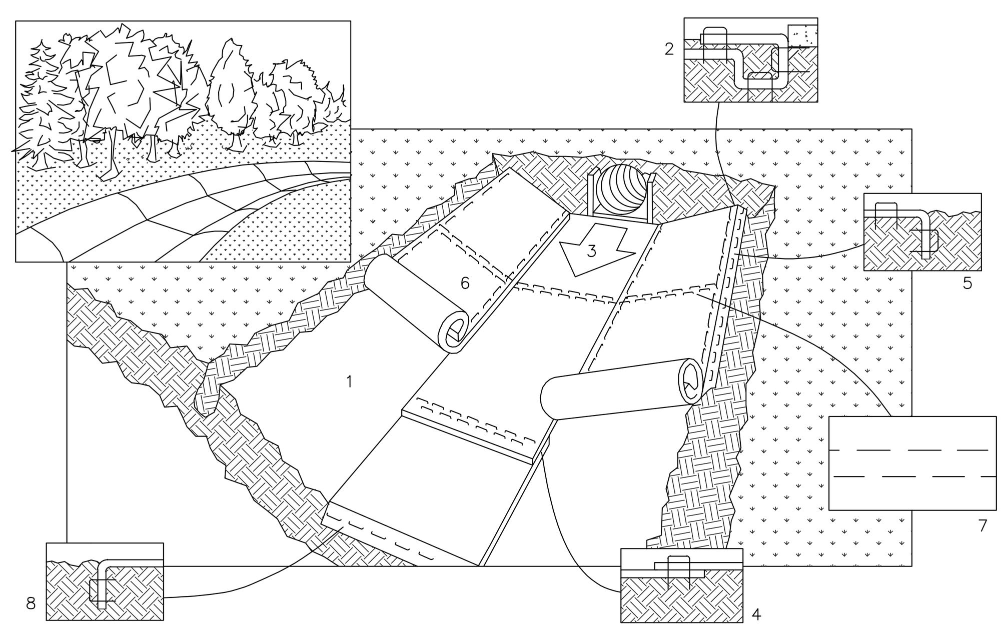

NOTES
1. PREPARE SOIL BEFORE INSTALLING BLANKETS, INCLUDING APPLICATION OF LIME, FERTILIZER, AND SEED.
2. BEGIN AT THE TOP OF THE CHANNEL BY ANCHORING THE BLANKET IN A 6" DEEP X 6" WIDE TRENCH. BACKFILL AND COMPACT THE TRENCH AFTER STAPLING.
3. ROLL CENTER BLANKET IN DIRECTION OF WATER FLOW ON BOTTOM OF CHANNEL.
4. PLACE BLANKETS END OVER END (SHINGLE STYLE) WITH A 6" OVERLAP. USE A DOUBLE ROW OF' STAGGERED STAPLES 4" APART TO SECURE BLANKETS.
5. FULL LENGTH EDGE OF BLANKETS AT TOP OF SIDE SLOPES MUST BE ANCHORED IN 6" DEEP X 6" WIDE TRENCH. BACKFILL AND COMPACT THE TRENCH AFTER STAPLING.
6. BLANKETS ON SIDE SLOPES MUST BE OVERLAPPED 4" OVER THE CENTER BLANKET AND STAPLED (2" FOR C350 MATTING).
7. IN HIGH FLOW CHANNEL APPLICATIONS, A STAPLE CHECK SLOT IS RECOMMENDED AT 30 TO 40 FOOT INTERVALS. USE A ROW OF STAPLES 4" APART OVER ENTIRE WIDTH OF THE CHANNEL. PLACE A SECOND ROW 4" BELOW THE FIRST ROW IN A STAGGERED PATTERN.
8. THE TERMINAL END OF THE BLANKETS MUST BE ANCHORED IN A 6" DEEP X 6" WIDE TRENCH. BACKFILL AND COMPACT THE TRENCH AFTER STAPLING.

ECB CHANNEL INSTALLATION

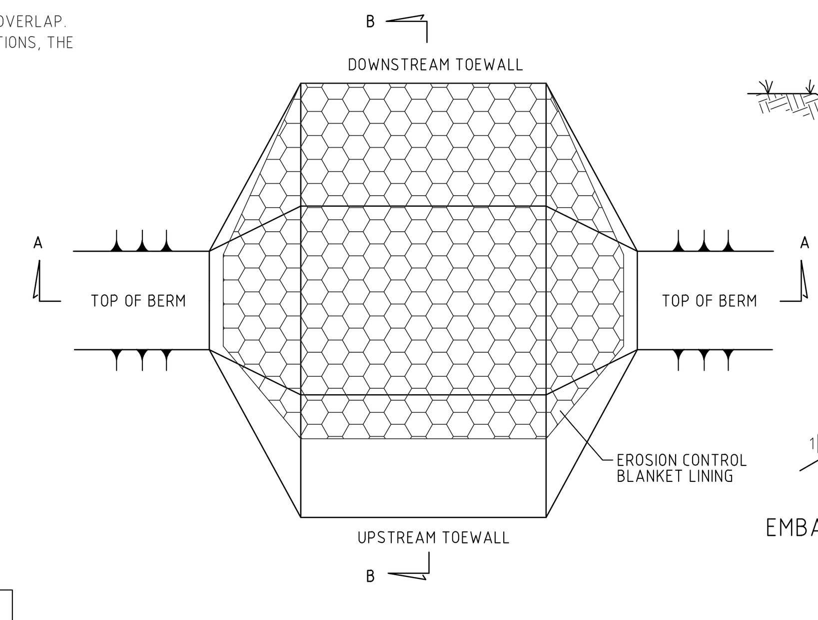

PLAN VIEW

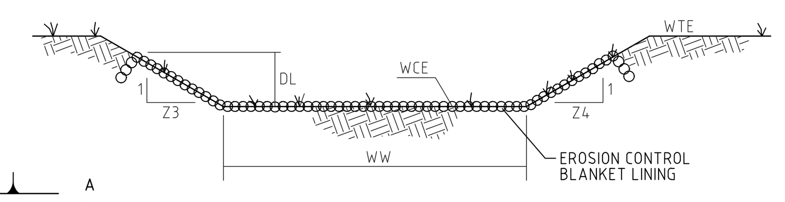

SECTION 'A'-'A'

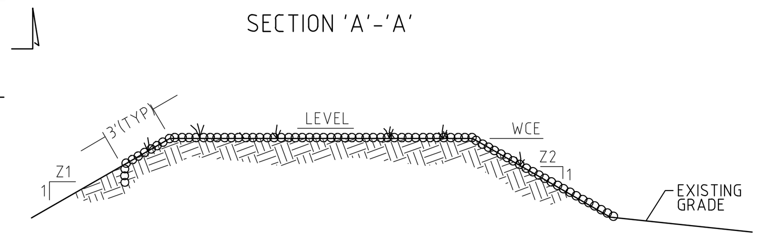

EMBANKMENT SECTION 'B' - 'B' ALONG EMERGENCY SPILLWAY

BASIN	WEIR Z3	WEIR Z4	WEIR TOP ELEV WTE (FT)	WEIR CREST ELEV WCE (FT)	WEIR WIDTH Ww (FT)	ECB LINING MAT'L & STAPLE PATTERN	ECB LINING LINING DEPTH DL (FT)	ECB LINING Z1	ECB LINING Z2
1	3	3	515.00	513.60	42'	P300/D	1.0'	3	3

BASIN EMERGENCY SPILLWAY

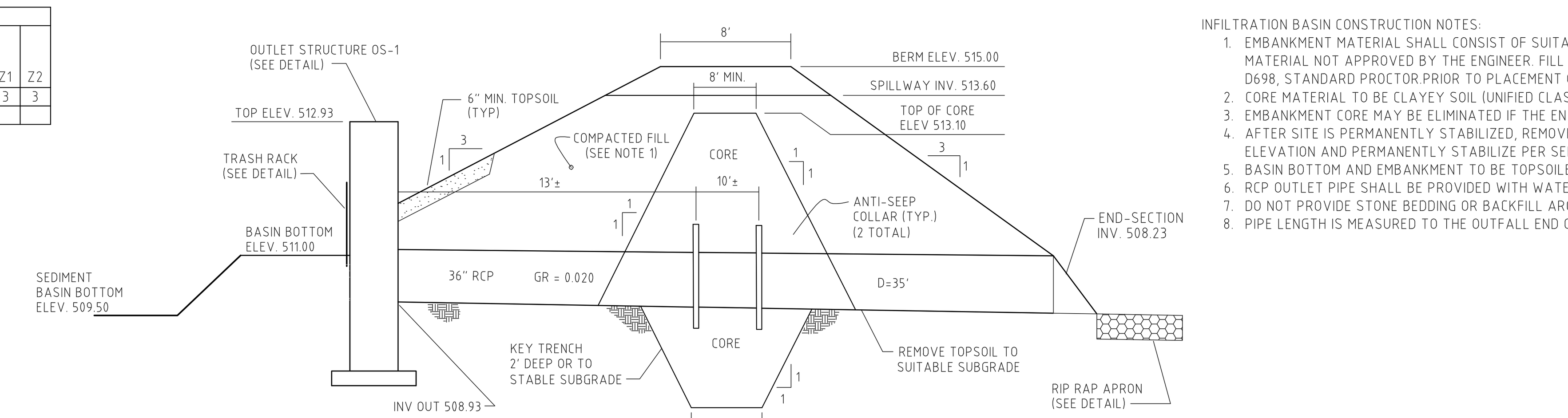

INFILTRATION BASIN #1 CROSS-SECTION

INFILTRATION BASIN CONSTRUCTION NOTES:
1. EMBANKMENT MATERIAL SHALL CONSIST OF SUITABLE MATERIAL FREE OF ALL ROOTS, SOD, FROZEN SOIL, ROCK OVER 4" IN DIAMETER, AND ANY OTHER MATERIAL NOT APPROVED BY THE ENGINEER. FILL SHALL BE COMPACTED IN 8" LIFTS TO AT LEAST 95% OF STANDARD MAXIMUM DRY DENSITY PER ASTM D698, STANDARD PROCTOR.PRIOR TO PLACEMENT OF A NEW LIFT, THE TOP 3" OF THE PREVIOUS LIFT SHALL BE SCARIFIED.
2. CORE MATERIAL TO BE CLAYEY SOIL (UNIFIED CLASS CL, ML OR CL-ML) COMPACTED TO 98% MAXIMUM DRY DENSITY.
3. EMBANKMENT CORE MAY BE ELIMINATED IF THE ENTIRE EMBANKMENT CONFORMS TO NOTE 2. KEY TRENCH CORE IS STILL REQUIRED.
4. AFTER SITE IS PERMANENTLY STABILIZED, REMOVE SEDIMENT, EXCAVATE TO FINAL SUBGRADE, SPREAD 6" OF TOPSOIL INSIDE BASIN BELOW CLEANOUT ELEVATION AND PERMANENTLY STABILIZE PER SEEDING AND MULCHING SPECIFICATIONS.
5. BASIN BOTTOM AND EMBANKMENT TO BE TOPSOILED AND PERMANENTLY SEEDED AND MULCHED PER SEEDING AND MULCHING SPECIFICATIONS.
6. RCP OUTLET PIPE SHALL BE PROVIDED WITH WATERTIGHT COUPLERS.
7. DO NOT PROVIDE STONE BEDDING OR BACKFILL AROUND THE OUTLET PIPE.
8. PIPE LENGTH IS MEASURED TO THE OUTFALL END OF THE END SECTION, WHERE APPLICABLE.

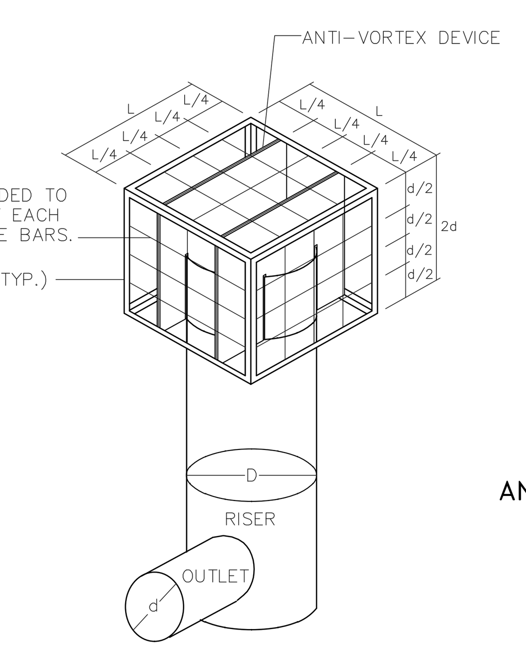

TRASH RACK AND ANTI-VORTEX DEVICE

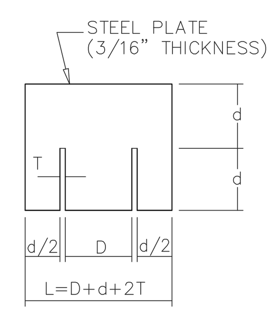

ANTI-VORTEX DEVICE

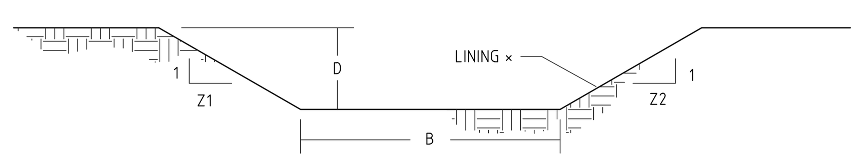

CHANNEL CROSS-SECTION

CHANNEL NO.	SECTION	BOTTOM WIDTH B (FT)	DEPTH D (FT)	Z1 (FT)	Z2 (FT)	PERMANENT LINING	TEMPORARY LINING
1	1	4.0	1.45	3.0	3.0	VEGETATED	NAG C125
2	1	3.0	1.00	3.0	3.0	VEGETATED	NAG S75

× SEE MANUFACTURER'S LINING INSTALLATION DETAIL FOR STAPLE PATTERNS, AND VEGETATION STABILIZATION SPECIFICATIONS FOR SOIL AMENDMENTS, SEED MIXTURES AND MULCHING INFORMATION.

NOTES:
1. HORIZONTAL STAPLE SPACING SHOULD BE ALTERED IF NECESSARY TO ALLOW STAPLES TO SECURE THE CRITICAL POINTS ALONG THE CHANNEL SURFACE.
2. IF ROCK OR GRAVEL LENSES ARE ENCOUNTERED DURING SWALE EXCAVATION, UNDERCUT ROCK OR GRAVEL TO 8" BELOW FINISHED GRADE. COVER ROCK WITH 4" OF SOIL AND 4" OF TOPSOIL.
3. ALL CHANNELS MUST BE KEPT FREE OF OBSTRUCTIONS SUCH AS FILL GROUND, FALLEN LEAVES AND WOODY DEBRIS, ACCUMULATED SEDIMENT, AND CONSTRUCTION MATERIALS/WASTES. CHANNELS SHOULD BE KEPT MOWED AND/OR FREE OF ALL WEEDY, BRUSHY OR WOODY GROWTH. ANY UNDERGROUND UTILITIES RUNNING ACROSS / THROUGH THE CHANNEL(S) SHALL BE IMMEDIATELY BACKFILLED AND THE CHANNEL(S) REPAIRED AND STABILIZED PER THE CHANNEL CROSS-SECTION DETAIL.
4. VEGETATED CHANNELS SHALL BE CONSTRUCTED FREE OF ROCKS, TREE ROOTS, STUMPS OR OTHER PROJECTIONS THAT WILL IMPEDE NORMAL CHANNEL FLOW AND/OR PREVENT GOOD LINING TO SOIL CONTACT. THE CHANNEL SHALL BE INITIALLY OVER EXCAVATED TO ALLOW FOR THE PLACEMENT OF TOPSOIL.

TYPICAL VEGETATED SWALES

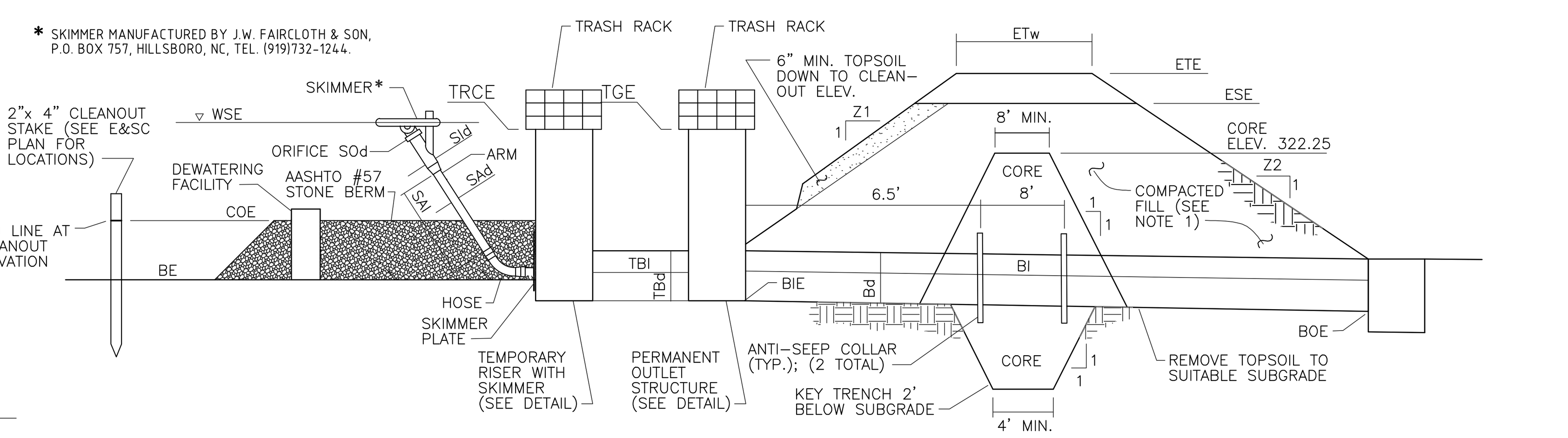

BASIN NO.	Z1 (FT.)	Z2 (FT.)	PERMANENT OUTLET STRUCTURE TOP OF GRATE ELEV. TGE (FT.)	TEMPORARY RISER DIA. Bd (IN.)	TEMPORARY RISER CREST ELEV. TRCE(FT.)	TEMPORARY RISER MAT'L	TEMPORARY RISER LENGTH TBI (FT.)	TEMPORARY RISER BARREL DIA. TBd(FT.)	BARREL DIA. Bd (IN.)	BARREL INLET ELEV. BIE (FT.)	BARREL MAT'L	BARREL LENGTH BI (FT.)	BARREL OUTLET ELEV. BOE (FT.)	EMBANKMENT TOP ELEV. ETE (FT.)	EMBANKMENT TOP WIDTH ETw (FT.)	EMERGENCY SPILLWAY INV. ELEV. ESE (FT.)	CLEANOUT ELEV. COE (FT)	BOTTOM ELEV. BE (FT.)
1	3	3	512.93	48	512.93	CMP	6	18	36	508.93	RCP	35	508.23	515.00	8	513.60	511.00	509.50

NOTES
1) SEDIMENT BASINS, INCLUDINGALL APPURTENANT WORKS, SHALL BE CONSTRUCTED TO THE DETAIL AND DIMENSIONS ON THE E&S PLAN DRAWINGS.
2) AREA UNDER EMBANKMENT SHALL BE CLEARED, GRUBBED AND STRIPPED OF TOPSOIL TO A DEPTH OF 2 FEET PRIOR TO ANY PLACEMENT AND COMPACTION OF EARTHEN FILL. IN ORDER TO FACILITATE MAINTENANCE AND RESTORATION, THE POOL AREA SHALL BE CLEARED OF ALL BRUSH, TREES AND OBJECTIONABLE MATERIAL. FILL MATERIAL FOR THE EMBANKMENTS SHALL BE FREE OF ROOTS, OR OTHER WOODY VEGETATION, ORGANIC MATERIAL, LARGE STONES AND OTHER OBJECTIONABLE MATERIALS. THE EMBANKMENT SHALL BE COMPACTED IN LAYERED LIFTS OF NOT MORE THAN 6" TO 9". MAXIMUM ROCK SIZE SHALL BE NO GREATER THAN 2/3 THE LIFT THICKNESS.
3) UPON COMPLETION, THE EMBANKMENT SHALL BE SEEDED, MULCHED, BLANKETED OR OTHERWISE STABILIZED ACCORDING TO THE SPECIFICATIONS OF THE E&S PLAN DRAWINGS. TREES SHALL NOT BE PLANTED ON THE EMBANKMENT.
4) INSPECT ALL SEDIMENT BASINS ON AT LEAST A WEEKLY BASIS AND AFTER EACH RUNOFF EVENT. PROVIDE ACCESS FOR SEDIMENT REMOVAL AND OTHER REQUIRED MAINTENANCE ACTIVITIES. A CLEAN-OUT STAKE SHALL BE PLACED NEAR THE CENTER OF EACH BASIN. ACCUMULATED SEDIMENT SHALL BE REMOVED WHEN IT HAS REACHED THE CLEAN-OUT ELEVATION ON THE STAKE AND THE BASIN RESTORED O ITS ORIGINAL DIMENSIONS. DISPOSE OF MATERIALS REMOVED FROM THE BASIN IN A MANNER DESCRIBED IN THE E&S PLAN.
5) BASIN EMBANKMENTS, SPILLWAYS AND OUTLETS SHALL BE INSPECTED FOR EROSION, PIPING AND SETTLEMENT. NECESSARY REPAIRS SHALL BE MADE IMMEDIATELY. DISPLACED RIPRAP WITHIN THE OUTLET ENERGY DISSIPATOR SHALL BE REPLACED IMMEDIATELY.
6) ACCUMULATED SEDIMENT SHALL BE REMOVED AND DISTURBED AREAS SHALL BE STABILIZED INSIDE THE BASIN BEFORE CONVERSION TO A STORMWATER MANAGEMENT FACILITY. THE DEVICE SHOWN IN THE SEDIMENT BASIN DEWATERING FACILITY DETAIL MAY BE USED TO DEWATER SATURATED SEDIMENT PRIOR TO ITS REMOVAL. ROCK FILTERS SHALL BE ADDED AS NECESSARY.
7) EMBANKMENT MATERIAL SHALL CONSIST OF SUITABLE MATERIAL FREE OF ALL ROOTS, SOD, FROZEN SOIL, ROCK OVER 4" IN DIAMETER, AND ANY OTHER MATERIAL NOT APPROVED BY THE ENGINEER. FILL SHALL BE COMPACTED IN 8" LIFTS TO AT LEAST 95% OF STANDARD MAXIMUM DRY DENSITY PER ASTM D698, STANDARD PROCTOR. PRIOR TO PLACEMENT OF A NEW LIFT, THE TOP 3" OF THE PREVIOUS LIFT SHALL BE SCARIFIED.
8) CORE MATERIAL TO BE CLAYEY SOIL (UNIFIED CLASS CL, ML OR CL-ML) COMPACTED TO 98% MAXIMUM DRY DENSITY.
9) EMBANKMENT CORE MAY BE ELIMINATED IF THE ENTIRE EMBANKMENT CONFORMS TO NOTE 2. KEY TRENCH CORE IS STILL REQUIRED.
10) AFTER SITE IS PERMANENTLY STABILIZED, REMOVE SEDIMENT, EXCAVATE TO FINAL SUBGRADE, SPREAD 6" OF TOPSOIL INSIDE BASIN BELOW CLEANOUT ELEVATION AND PERMANENTLY STABILIZE PER SEEDING AND MULCHING SPECIFICATIONS.
11) BASIN BOTTOM AND EMBANKMENT TO BE TOPSOILED AND PERMANENTLY SEEDED AND MULCHED PER SEEDING AND MULCHING SPECIFICATIONS.
12) SLCPP OUTLET PIPE SHALL BE PROVIDED WITH WATERTIGHT COUPLERS.
13) DO NOT PROVIDE STONE BEDDING OR BACKFILL AROUND THE OUTLET PIPE.
14) PIPE LENGTH IS MEASURED TO THE OUTFALL END OF THE END SECTION, WHERE APPLICABLE.
15) CONSTRUCT THE ANTI-SEEP COLLARS OVER PIPE JOINTS NEAREST THE LOCATION NOTED ABOVE.
16) THE PERMITTEE SHALL BE RESPONSIBLE FOR THE STRUCTURAL STABILITY OF SEDIMENT TRAPS AND FOR THEIR PROTECTION AGAINST UNAUTHORIZED ACTS OF THIRD PARTIES.
17) CLEANOUT STAKES MUST BE PLACED AT HALF DISTANCES FROM POINTS OF CONCENTRATED INFLOWS TO SKIMMERS. WHEN SEDIMENT HAS ACCUMULATED TO THE CLEANOUT ELEVATION MARKED ON ANY STAKE, THE SEDIMENT MUST BE REMOVED TO RESTORE TRAP CAPACITIES.
18) BAFFLES MUST BE INSTALLED TO ALLOW TRAP MAINTENANCE AND CLEAN OUT.
19) APPROVAL OF THE USE OF A SKIMMER DOES NOT APPROVE OWNER OR OPERATOR USE OF ANY SKIMMER IN VIOLATION OF ANY PATENT, PATENT RIGHTS AND/OR PATENT LAWS.
20) SEDIMENT TRAPS SHALL BE KEPT FREE OF ALL TRASH, CONCRETE WASH WATER AND OTHER DEBRIS THAT POSE THE POTENTIAL FOR CLOGGING THE TRAP OUTLET STRUCTURES AND/OR POSE THE POTENTIAL FOR POLLUTION TO WATERS OF THE COMMONWEALTH.
21) DO NOT PROVIDE STONE BEDDING OR BACKFILL AROUND THE OUTLET PIPE.
22) SEE OTHER DETAIL SHEET FOR ADDITIONAL PERMANENT DETENTION BASIN CONSTRUCTION DETAILS.

SEDIMENT BASIN CROSS-SECTION ALONG PRINCIPAL SPILLWAY

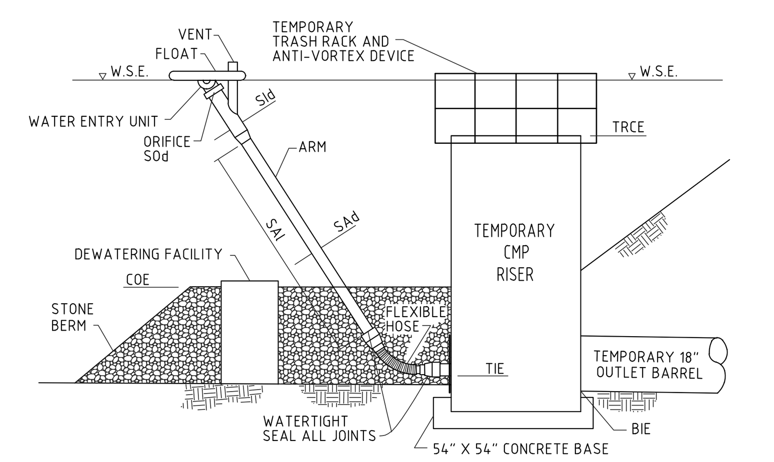

NOTES
1) ALL ORIFICES ON PERMANENT RISER BELOW TEMPORARY RISER EXTENSION SHALL HAVE WATER-TIGHT TEMPORARY SEALS PROVIDED. TEMPORARY STUB INVERT ELEVATION SHALL BE SET AT OR BELOW SEDIMENT CLEAN-OUT ELEVATION.
2) A ROPE SHALL BE ATTACHED TO THE SKIMMER ARM T FACILITATE ACCESS TO THE SKIMMER ONCE INSTALLED.
3) SKIMMER SHALL BE INSPECTED WEEKLY AND AFTER EACH RUNOFF EVENT.
4) ANY MALFUNCTIONING SKIMMER SHALL BE REPAIRED OR REPLACED WITHIN 24 HOURS OF INSPECTION.
5) ICE OR SEDIMENT BUILDUP AROUND THE PRINCIPAL SPILLWAY SHALL BE REMOVED SO AS TO ALLOW THE SKIMMER TO RESPOND TO FLUCTUATING WATER ELEVATIONS.
6) SEDIMENT SHALL BE REMOVED FROM THE BASIN WHEN IT REACHES THE LEVEL MARKED ON THE SEDIMENT CLEAN-OUT STAKE OR THE TOP OF THE STONE BERM.
7) APPROVAL OF THE USE OF A SKIMMER DOES NOT APPROVE OWNER OR OPERATOR USE OF ANY SKIMMER IN VIOLATION OF ANY PATENT, PATENT RIGHTS AND/OR PATENT LAWS.
8) ALSO SEE SEDIMENT TRAP SKIMMERS & PERMANENT STRUCTURES DETAIL.
9) SKIMMER MANUFACTURED BY J.W. FAIRCLOTH & SON, P.O. BOX 757, HILLSBORO, NC, TEL. (919)732-1244.

BASIN NO.	2.0 CFS/AC WSE (FT)	BARREL INLET ELEV. BIE (FT)	CLEANOUT ELEV. COE (FT)	SKIMMER (SEE NOTES) INLET DIA SId (IN)	ORIFICE DIA SOd (IN)	ARM LENGTH SAl (FT)	ARM DIA. SAd (IN)	MAT'L	HOSE LENGTH SHl (FT)	HOSE DIA. SHd (IN)	MAT'L	TUBE DIA. (IN)	TUBE INV. ELEV. TIE (FT)	TUBE MAT'L	TEMP. RISER CREST ELEV. PSCE (FT)
1	513.55	508.93	511.00	5	4	2.7	4	SCH 40 PVC	3	6	SCH 40 PVC	4	511.00	GALV. STEEL	512.93

SEDIMENT BASIN TEMPORARY SKIMMER AND PERMANENT OUTLET STRUCTURE

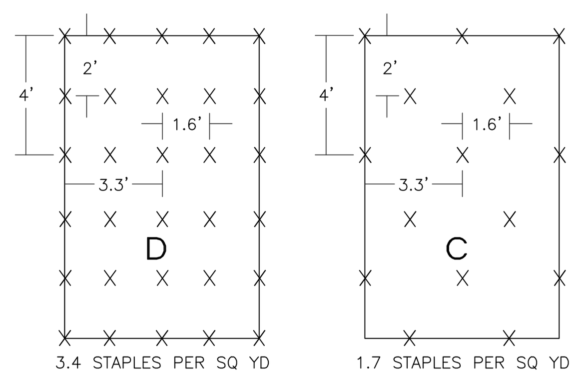

3.4 STAPLES PER SQ YD

1.7 STAPLES PER SQ YD

STAPLE PATTERN GUIDE

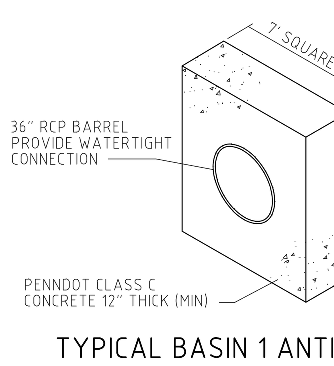

TYPICAL BASIN 1 ANTI-SEEP COLLAR

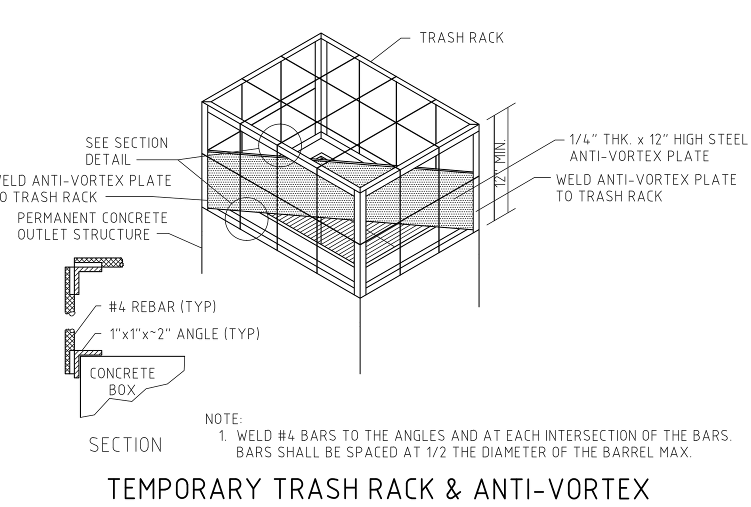

NOTE:
1. WELD #4 BARS TO THE ANGLES AND AT EACH INTERSECTION OF THE BARS. BARS SHALL BE SPACED AT 1/2 THE DIAMETER OF THE BARREL MAX.

TEMPORARY TRASH RACK & ANTI-VORTEX FOR PERMANENT OUTLET STRUCTURE

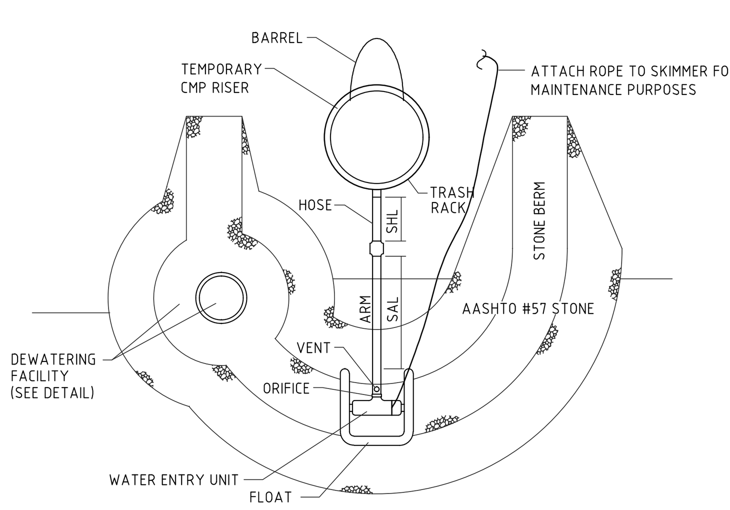

SEDIMENT BASIN SKIMMERS & TEMPORARY CMP RISER

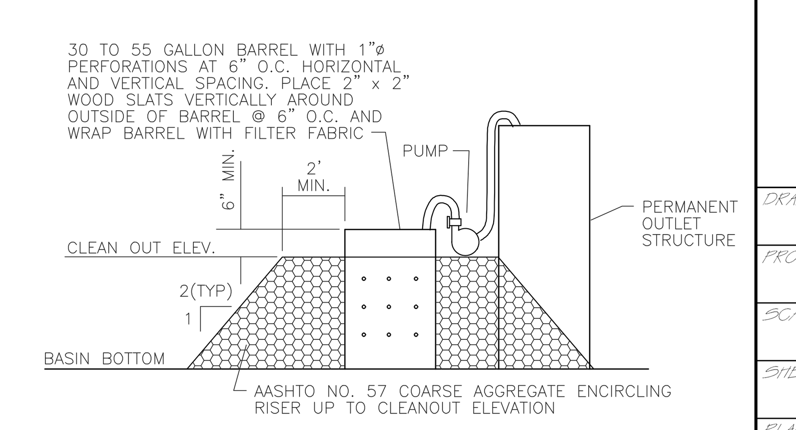

SEDIMENT TRAP DEWATERING FACILITY

Revision	Date	Description	Rev.By
4	2/5/20	REVISED PER TOWNSHIP COMMENTS	MDH
3	12/20/19	REVISED PER TOWNSHIP COMMENTS	MDH
2	10/23/19	REVISED PER TOWNSHIP COMMENTS	MDH
1	7/24/19	REVISED PER TOWNSHIP COMMENTS	MDH

THIS DOCUMENT AND ALL INFORMATION AND WORK PRODUCT REPRESENTED BY AND CONTAINED HEREIN, IS THE SOLE AND EXCLUSIVE PROPERTY OF DH ENTERPRISES, INC. THE INFORMATION CONTAINED HEREIN IS LICENSED ONLY FOR LIMITED USE BY THE INTENDED RECIPIENT, AND NO LICENSE, PERMISSION OR AUTHORITY IS EXTENDED DIRECTLY OR IMPLIED, TO ANY PARTY WITHOUT THE EXPRESS WRITTEN PERMISSION OF DH ENTERPRISES, INC. COPYRIGHT, 2019, DH ENTERPRISES. ALL RIGHTS RESERVED

2815 PENN AVENUE
WEST LAWN, PA
610-927-4242
a civil engineering design & management firm
Enterprises

SEAL:

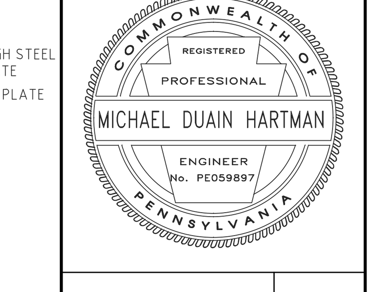

"TROUTBECK FARMS"
PRELIMINARY PLAN
E&SC DETAILS

CLIENT: MOSER CONSTRUCTION MANAGEMENT, LLC.
LOCATION: WILLISTOWN TOWNSHIP, CHESTER COUNTY, PENNSYLVANIA
DATE: JUNE 1, 2018

DRAWN BY: M.D.HARTMAN
PROJ. MANAGER: M.D.HARTMAN
SCALE: ---
SHEET: 19 of 25
PLAN NO. 17032-P-D-7.4

SEE "OFFSITE SANITARY SEWER PLAN AND PROFILES SHEETS FOR CONTINUATION OF NPDES PERMIT BOUNDARY AND LIMIT OF DISTURBANCE

DRUID LANE
TOWNSHIP ROUTE NO. T-401
MONUMENT ROAD
TOWNSHIP ROUTE NO. T-671
MONUMENT AVE.
TOWNSHIP ROUTE NO. T-672 - STONEI
TOWNSHIP ROUTE NO. T-678 - PHEASANT LANE
TOWNSHIP ROUTE NO. T-387
FOREST LANE

MaD
MaE
MaC
UugB
GgB
Ba
BaB
W
GgC
GgA
Uug

PROBE #1
PROBE #2
PROBE #3
PROBE #4
PROBE #5
PROBE #6
PROBE #7
PROBE #8
PROBE #9
PROBE #10
PROBE #11
PROBE #12
PROBE #13
PROBE #14
PROBE #15
PROBE #16
PROBE #18

SENSITIVE RESOURCES (PER DEP REQUIREMENTS)		
EXISTING NATURAL SENSITIVE RESOURCES	TOTAL AREA (AC.)	PROTECTED AREA (AC.)
WETLANDS	1.06	1.06
POND	0.40	0.40
RIPARIAN BUFFERS	9.23	9.23
STEEP SLOPES, 25%+	0.68	0.68
STEEP SLOPES, 15% - 25%	1.29	1.27
WOODLANDS	13.69	11.34
HYDRIC SOILS	6.78	6.36

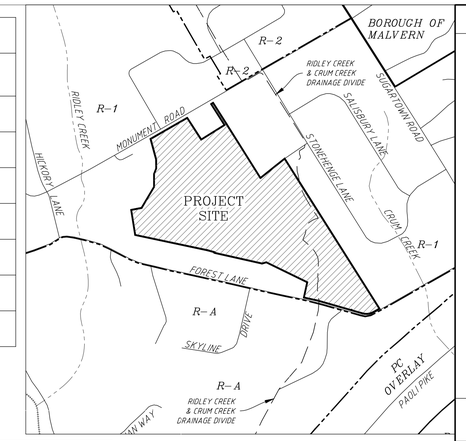

VICINITY MAP
1"=800'

PROTECTED FEATURES LEGEND

- WATERBODIES
- WETLANDS
- RIPARIAN AREAS
- HYDRIC SOILS
- WOODLANDS
- STEEP SLOPES 15% - 25%
- STEEP SLOPES 25%+
- MINIMUM DISTRUBANCE

LEGEND

- EXISTING CURB
- PROPOSED CURB
- 450 EXISTING CONTOURS
- 450 PROPOSED CONTOURS
- 451.25 EXISTING SPOT ELEVATION
- 45125 PROPOSED SPOT ELEVATION
- SOIL LINE
- EXISTING STREET SIGN
- SLANTED TEXT — EXISTING FEATURES ARE LABELED WITH SLANTED TEXT
- (TBR) TO BE REMOVED
- EXISTING DECIDUOUS TREE
- PROPOSED SANITARY SEWER & MANHOLE
- PROPOSED STORM SEWER & CATCH BASIN
- EXISTING WATER LINE & VALVE
- W — PROPOSED WATER LINE & VALVE
- PROPOSED FIRE HYDRANT
- SL — PROPOSED GRINDER PUMP
- WS — PROPOSED WATER LATERAL
- RIPARIAN BUFFER - 150'
- NPDES PERMIT BOUNDARY
- NPDES PERMIT BOUNDARY & LIMIT OF DISTURBANCE
- LIMIT OF DISTURBANCE
- DRAINAGE AREA TO BMP
- AREA OF WOODLAND DISTURBANCE

INFILTRATION TEST RESULTS						
TEST AREA	DEPTH TO BEDROCK	DEPTH TO GROUNDWATER	INFILTRATION RATE (IN/HR)	EXISTING GRADE	TEST ELEVATION	PROBE ELEVATION
1	>100"	>100"	0.31	499.00	495.67	490.67
2	>132"	>132"	0.25	500.58	493.58	489.58
3	>156"	>156"	0.25	503.23	495.23	490.23
4	>88"	>88"	4.28	517.33	514.00	510.00
5	>70"	>70"	8.25	511.36	509.53	505.53
6	>100"	>100"	3.00	526.92	522.75	518.59
7	>107"	>107"	1.50	521.51	517.51	512.59
8	>102"	>102"	0.25	514.88	510.38	506.38
9	>114"	>58"	0.83	510.50	508.50	501.00
10	>108"	>91"	1.44	513.26	510.96	504.26
11	>108"	>108"	0.72	520.84	516.84	511.84
12	>96"	>96"	0.48	522.26	517.96	514.26
13	>108"	>108"	0.48	521.38	517.18	512.38
14	>90"	>90"	9.72	530.46	527.26	522.96
15	>96"	>96"	10.08	531.87	529.47	523.87
16	>102"	>102"	5.40	505.51	501.21	497.01
17	>104"	>101"	1.20	505.45	502.95	496.75
18	>48"	>48"	0.25	508.95	508.28	504.28

GRAPHIC SCALE 1"=100'
100 0 100 200 300

Revisor	Date	Description	Rev. By
4	2/5/20	REVISED PER TOWNSHIP COMMENTS	MDH
3	12/20/19	REVISED PER TOWNSHIP COMMENTS	MDH
2	10/23/19	REVISED PER TOWNSHIP COMMENTS	MDH
1	7/24/19	REVISED PER TOWNSHIP COMMENTS	MDH

THIS DOCUMENT AND ALL INFORMATION AND WORK PRODUCT REPRESENTED BY AND CONTAINED HEREIN, IS THE SOLE AND EXCLUSIVE PROPERTY OF DH ENTERPRISES, INC. THE INFORMATION CONTAINED HEREIN IS LICENSED ONLY FOR LIMITED USE BY THE PARTIES TO WHOM IT IS ISSUED. THE INFORMATION CONTAINED HEREIN MAY NOT BE REPRODUCED BY ANY PARTY WITHOUT THE EXPRESS WRITTEN PERMISSION OF DH ENTERPRISES, INC. COPYRIGHT, 2019, DH ENTERPRISES. ALL RIGHTS RESERVED.

2815 PENN AVENUE
WEST LAWN, PA
610-927-4242

Enterprises
a civil engineering design & management firm

SEAL:
COMMONWEALTH OF PENNSYLVANIA
REGISTERED PROFESSIONAL
MICHAEL DUAIN HARTMAN
ENGINEER
No. PE059897

"TROUTBECK FARMS"
PRELIMINARY PLAN
OVERALL POST-CONSTRUCTION STORMWATER MANAGEMENT PLAN

CLIENT: MOSER CONSTRUCTION MANAGEMENT, LLC
LOCATION: WILLISTOWN TOWNSHIP, CHESTER COUNTY, PENNSYLVANIA
DATE: JUNE 1, 2018

DRAWN BY: M.D.HARTMAN
PROJ. MANAGER: M.D.HARTMAN
SCALE: 1" = 100'
SHEET: 20 of 25
PLAN NO: 17032-P-D-8.0

GRAPHIC SCALE 1"=50'

50 0 50 100 150

LEGEND

- EXISTING CURB
- PROPOSED CURB
- 450 EXISTING CONTOURS
- 450 PROPOSED CONTOURS
- ×451.25 EXISTING SPOT ELEVATION
- ×451.25 PROPOSED SPOT ELEVATION
- SOIL LINE
- EXISTING STREET SIGN
- SLANTED TEXT EXISTING FEATURES ARE LABELED WITH SLANTED TEXT
- (TBR) TO BE REMOVED
- EXISTING DECIDUOUS TREE
- PROPOSED SANITARY SEWER & MANHOLE
- PROPOSED STORM SEWER & CATCH BASIN
- EXISTING WATER LINE & VALVE
- W PROPOSED WATER LINE & VALVE
- PROPOSED FIRE HYDRANT
- SL PROPOSED GRINDER PUMP
- WL PROPOSED WATER LATERAL
- RIPARIAN BUFFER - 150'
- NPDES PERMIT BOUNDARY
- NPDES PERMIT BOUNDARY & LIMIT OF DISTURBANCE
- LIMIT OF DISTURBANCE
- DRAINAGE AREA TO BMP

PCSM HATCH LEGEND

- EXISTING TREES WITHIN 100' OF IMPERVIOUS (AREA CREDITED TO BMP 5.4.1)
- DISCONNECTED ROOF AREAS
- MINIMIZED SOIL COMPACTION (MEADOW COVERAGE)
- INFILTRATION BASIN
- BIORETENTION AREAS RAIN GARDENS

Revisor	Date	Description	Rev.By
4	2/5/20	REVISED PER TOWNSHIP COMMENTS	MDH
3	12/20/19	REVISED PER TOWNSHIP COMMENTS	MDH
2	10/23/19	REVISED PER TOWNSHIP COMMENTS	MDH
1	7/24/19	REVISED PER TOWNSHIP COMMENTS	MDH

THIS DOCUMENT AND ALL INFORMATION AND WORK PRODUCT REPRESENTED BY AND CONTAINED HEREON, IS THE SOLE AND EXCLUSIVE PROPERTY OF DH ENTERPRISES, INC. THE INFORMATION CONTAINED HEREIN IS LICENSED ONLY FOR LIMITED USE BY THE PARTIES TO WHOM IT IS ISSUED. THE INFORMATION CONTAINED HEREIN MAY NOT BE REPRODUCED OR DISTRIBUTED TO ANY PARTY WITHOUT THE EXPRESS WRITTEN PERMISSION OF DH ENTERPRISES, INC. COPYRIGHT, 2019, DH ENTERPRISES. ALL RIGHTS RESERVED.

2815 PENN AVENUE
WEST LAWN, PA
610-927-4242

Enterprises
a civil engineering design & management firm

SEAL: COMMONWEALTH OF PENNSYLVANIA REGISTERED PROFESSIONAL MICHAEL DUAIN HARTMAN ENGINEER No. PE059897

"TROUTBECK FARMS"
PRELIMINARY PLAN
POST-CONSTRUCTION STORMWATER MANAGEMENT PLAN

CLIENT: MOSER CONSTRUCTION MANAGEMENT, LLC
LOCATION: WILLISTOWN TOWNSHIP, CHESTER COUNTY, PENNSYLVANIA
DATE: JUNE 1, 2018

DRAWN BY: M.D.HARTMAN
PROJ.MANAGER: M.D.HARTMAN
SCALE: 1" = 50'
SHEET: 21 of 25
PLAN NO: 17032-P-D-8.1

MATCH LINE SEE PLAN 8.2

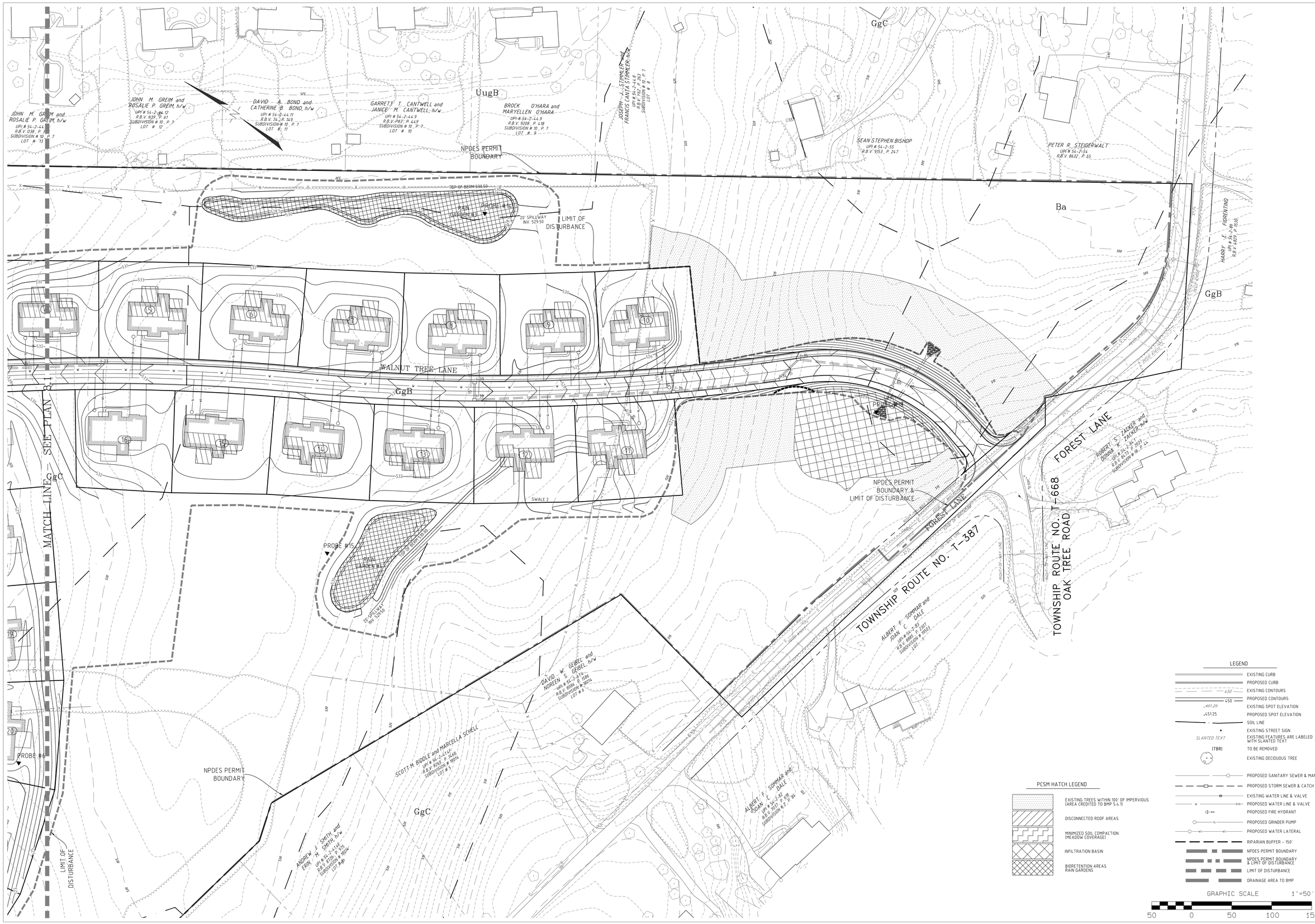

Revision	Date	Description	Rev.By
4	2/5/20	REVISED PER TOWNSHIP COMMENTS	MDH
3	12/20/19	REVISED PER TOWNSHIP COMMENTS	MDH
2	10/23/19	REVISED PER TOWNSHIP COMMENTS	MDH
1	7/24/19	REVISED PER TOWNSHIP COMMENTS	MDH

THIS DOCUMENT AND ALL INFORMATION AND WORK PRODUCT REPRESENTED BY AND CONTAINED HEREON, IS THE SOLE AND EXCLUSIVE PROPERTY OF DH ENTERPRISES, INC. THE INFORMATION CONTAINED HEREIN IS LICENSED ONLY FOR LIMITED USE BY THE OWNER OF THE PROPERTY SHOWN HEREON. THE INFORMATION CONTAINED HEREIN MAY NOT BE REPRODUCED OR USED BY ANY PARTY WITHOUT THE EXPRESS WRITTEN PERMISSION OF DH ENTERPRISES, INC. COPYRIGHT, 2019, DH ENTERPRISES. ALL RIGHTS RESERVED.

2815 PENN AVENUE
WEST LAWN, PA
610-927-4242

DH Enterprises

a civil engineering design & management firm

SEAL:
COMMONWEALTH OF PENNSYLVANIA
REGISTERED PROFESSIONAL
MICHAEL DUAIN HARTMAN
ENGINEER
No. PE059897

"TROUTBECK FARMS"
PRELIMINARY PLAN
POST-CONSTRUCTION STORMWATER MANAGEMENT PLAN

CLIENT: MOSER CONSTRUCTION MANAGEMENT, LLC
LOCATION: WILLISTOWN TOWNSHIP, CHESTER COUNTY, PENNSYLVANIA
DATE: JUNE 1, 2018

DRAWN BY: M.D.HARTMAN
PROJ.MANAGER: M.D.HARTMAN
SCALE: 1" = 50'
SHEET: 22 of 25
PLAN NO: 17032-P-D-8.2

CHANNEL CROSS-SECTION

CHANNEL NO.	SECTION	BOTTOM WIDTH B (FT)	DEPTH D (FT)	Z1 (FT)	Z2 (FT)	PERMANENT LINING	TEMPORARY LINING
1	1	4.0	1.45	3.0	3.0	VEGETATED	NAG C125
2	1	3.0	1.00	3.0	3.0	VEGETATED	NAG S75

* SEE MANUFACTURER'S LINING INSTALLATION DETAIL FOR STAPLE PATTERNS, AND VEGETATION STABILIZATION SPECIFICATIONS FOR SOIL AMENDMENTS, SEED MIXTURES AND MULCHING INFORMATION.

NOTES:
1. HORIZONTAL STAPLE SPACING SHOULD BE ALTERED IF NECESSARY TO ALLOW STAPLES TO SECURE THE CRITICAL POINTS ALONG THE CHANNEL SURFACE.
2. IF ROCK OR GRAVEL LENSES ARE ENCOUNTERED DURING SWALE EXCAVATION, UNDERCUT ROCK OR GRAVEL TO 8" BELOW FINISHED GRADE. COVER ROCK WITH 4" OF SOIL AND 4" OF TOPSOIL.
3. ALL CHANNELS MUST BE KEPT FREE OF OBSTRUCTIONS SUCH AS FILL GROUND, FALLEN LEAVES AND WOODY DEBRIS, ACCUMULATED SEDIMENT, AND CONSTRUCTION MATERIALS/WASTES. CHANNELS SHOULD BE KEPT MOWED AND/OR FREE OF ALL WEEDY, BRUSHY OR WOODY GROWTH. ANY UNDERGROUND UTILITIES, RUNNING ACROSS / THROUGH THE CHANNEL(S) SHALL BE IMMEDIATELY BACKFILLED AND THE CHANNEL(S) REPAIRED AND STABILIZED PER THE CHANNEL CROSS-SECTION DETAIL.
4. VEGETATED CHANNELS SHALL BE CONSTRUCTED FREE OF ROCKS, TREE ROOTS, STUMPS OR OTHER PROJECTIONS THAT WILL IMPEDE NORMAL CHANNEL FLOW AND/OR PREVENT GOOD LINING TO SOIL CONTACT. THE CHANNEL SHALL BE INITIALLY OVER EXCAVATED TO ALLOW FOR THE PLACEMENT OF TOPSOIL.

TYPICAL VEGETATED SWALES

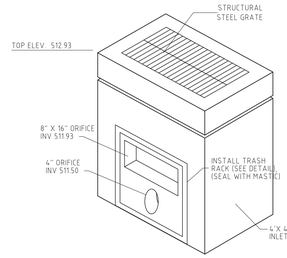

NOTES
1. PROVIDE MANHOLE STEPS IN ACCORDANCE WITH PennDOT RC-39.
2. OUTLET STRUCTURE MANUFACTURED BY TERRE HILL CONCRETE PRODUCTS (800) 242-1509, OR APPROVED EQUAL.

DETENTION BASIN OUTLET STRUCTURE (OS-1)

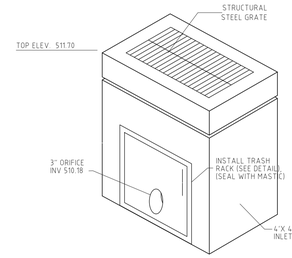

NOTES
1. PROVIDE MANHOLE STEPS IN ACCORDANCE WITH PennDOT RC-39.
2. OUTLET STRUCTURE MANUFACTURED BY TERRE HILL CONCRETE PRODUCTS (800) 242-1509, OR APPROVED EQUAL.

DETENTION BASIN OUTLET STRUCTURE (OS-2)

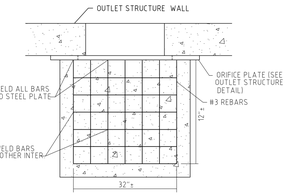

PLAN VIEW

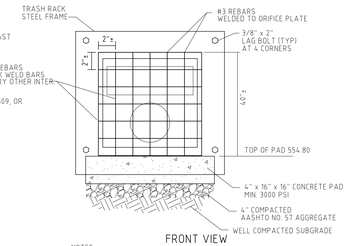

FRONT VIEW

NOTES:
1. APPLY 2 COATS OF RUST-INHIBITIVE PAINT TO ALL BARS AFTER WELDING.
2. OPENINGS IN TRASH RACK SHALL NOT EXCEED 1/2 THE ORIFICE SIZE.

TRASH RACK DETAIL

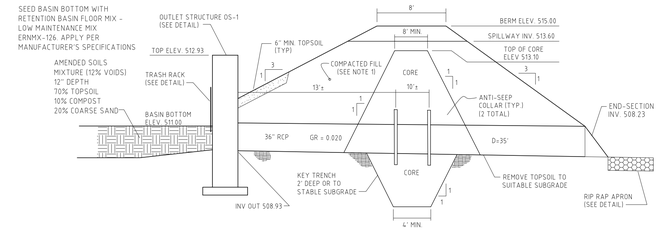

INFILTRATION BASIN #1 CROSS-SECTION

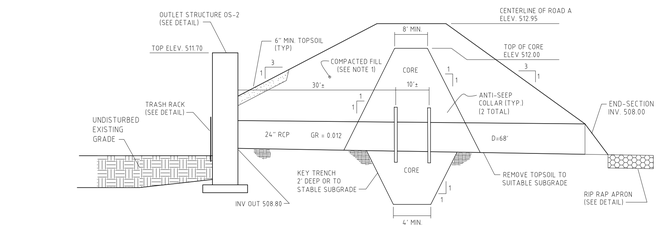

INFILTRATION BASIN #2 CROSS-SECTION

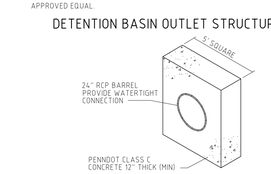

TYPICAL BASIN 1 ANTI-SEEP COLLAR

TYPICAL BASIN 2 ANTI-SEEP COLLAR

RETENTION BASIN FLOOR MIX - LOW MAINTENANCE
ERNMX-126
SEEDING RATE:20 - 40 LB. PER ACRE

20.0%	PUCCINELLIA DISTANS, 'FULTS'	(ALKALIGRASS, 'FULTS')
19.0%	PANICUM CLANDESTINUM, 'TIOGA'	(DEERTONGUE, 'TIOGA')
18.0%	AGROSTIS STOLONIFERA	(CREEPING BENTGRASS)
18.0%	ELYMUS VIRGINICUS, PA ECOTYPE	(VIRGINIA WILDRYE, PA ECOTYPE)
15.0%	POA PALUSTRIS	(FOWL BLUEGRASS)
5.0%	CAREX VULPINOIDEA, PA ECOTYPE	(FOX SEDGE, PA ECOTYPE)
3.0%	JUNCUS EFFUSUS	(SOFT RUSH)
2.0%	CAREX SCOPARIA, PA ECOTYPE	(BLUNT BROOM SEDGE, PA ECOTYPE)

INFILTRATION BASIN CONSTRUCTION NOTES:
1. EMBANKMENT MATERIAL SHALL CONSIST OF SUITABLE MATERIAL FREE OF ALL ROOTS, SOD, FROZEN SOIL, ROCK OVER 4" IN DIAMETER, AND ANY OTHER MATERIAL NOT APPROVED BY THE ENGINEER. FILL SHALL BE COMPACTED IN 8" LIFTS TO AT LEAST 95% OF STANDARD MAXIMUM DRY DENSITY PER ASTM D698, STANDARD PROCTOR.PRIOR TO PLACEMENT OF A NEW LIFT, THE TOP 3" OF THE PREVIOUS LIFT SHALL BE SCARIFIED.
2. CORE MATERIAL TO BE CLAYEY SOIL (UNIFIED CLASS CL, ML OR CL-ML) COMPACTED TO 98% MAXIMUM DRY DENSITY.
3. EMBANKMENT CORE MAY BE ELIMINATED IF THE ENTIRE EMBANKMENT CONFORMS TO NOTE 2. KEY TRENCH CORE IS STILL REQUIRED.
4. AFTER SITE IS PERMANENTLY STABILIZED, REMOVE SEDIMENT, EXCAVATE TO FINAL SUBGRADE, SPREAD 6" OF TOPSOIL INSIDE BASIN BELOW CLEANOUT ELEVATION AND PERMANENTLY STABILIZE PER SEEDING AND MULCHING SPECIFICATIONS.
5. BASIN BOTTOM AND EMBANKMENT TO BE TOPSOILED AND PERMANENTLY SEEDED AND MULCHED PER SEEDING AND MULCHING SPECIFICATIONS.
6. RCP OUTLET PIPE SHALL BE PROVIDED WITH WATERTIGHT COUPLERS.
7. DO NOT PROVIDE STONE BEDDING OR BACKFILL AROUND THE OUTLET PIPE.
8. PIPE LENGTH IS MEASURED TO THE OUTFALL END OF THE END SECTION, WHERE APPLICABLE.

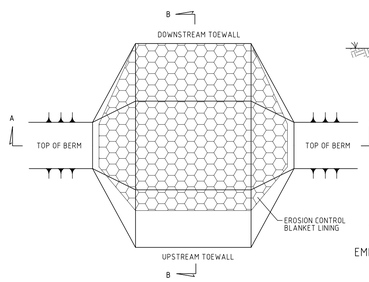

PLAN VIEW

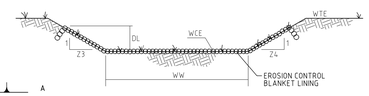

SECTION 'A'-'A'

EMBANKMENT SECTION 'B' - 'B' ALONG EMERGENCY SPILLWAY

BASIN	WEIR Z3	WEIR Z4	WEIR TOP ELEV WTE (FT)	WEIR CREST ELEV WCE (FT)	WEIR WIDTH Ww (FT)	ECB LINING MAT'L & STAPLE PATTERN	ECB LINING LINING DEPTH DL (FT)	ECB LINING Z1	ECB LINING Z2
1	3	3	515.00	513.60	42'	P300/D	1.0'	3	3

BASIN EMERGENCY SPILLWAY

4	2/5/20	REVISED PER TOWNSHIP COMMENTS	MDH
3	12/20/19	REVISED PER TOWNSHIP COMMENTS	MDH
2	10/23/19	REVISED PER TOWNSHIP COMMENTS	MDH
1	7/24/19	REVISED PER TOWNSHIP COMMENTS	MDH
Revision	Date	Description	Rev. By

THIS DOCUMENT AND ALL INFORMATION AND WORK PRODUCT REPRESENTED BY AND CONTAINED HEREON, IS THE SOLE AND EXCLUSIVE PROPERTY OF DH ENTERPRISES, INC. THE INFORMATION CONTAINED HEREIN IS LICENSED ONLY FOR LIMITED USE BY THE PARTIES TO WHOM IT IS ISSUED. REPRODUCTION OR DISTRIBUTION TO ANY OTHER PARTY WITHOUT THE EXPRESS WRITTEN PERMISSION OF DH ENTERPRISES, INC. COPYRIGHT, 2019, DH ENTERPRISES. ALL RIGHTS RESERVED.

2815 PENN AVENUE
WEST LAWN, PA
610-927-4242
Enterprises
a civil engineering design & management firm

SEAL:
COMMONWEALTH OF PENNSYLVANIA
REGISTERED PROFESSIONAL
MICHAEL DUAIN HARTMAN
ENGINEER
No. PE059897

"TROUTBECK FARMS"
PRELIMINARY PLAN
PCSM DETAILS

CLIENT: MOSER CONSTRUCTION MANAGEMENT, LLC
LOCATION: WILLISTOWN TOWNSHIP, CHESTER COUNTY, PENNSYLVANIA
DATE: JUNE 1, 2018

DRAWN BY: M.D.HARTMAN
PROJ. MANAGER: M.D.HARTMAN
SCALE: ---
SHEET: 23 of 25
PLAN NO. 17032-P-D-8.4

EQUITABLE OWNER AND APPLICANT
TROUTBECK FARM DEVELOPERS LLC
1171 LANCASTER AVE. SUITE 201
BERWYN PA 19312

OPERATIONS AND MAINTENANCE RESPONSIBILITIES
THE OWNER WILL BE RESPONSIBLE FOR THE BMP'S AS SHOWN ON THESE PLANS. THE OWNER SHALL INSPECT AND MONITOR THEM PERIODICALLY AND DURING SIGNIFICANT RUNOFF EVENTS TO ENSURE THEY ARE SUCCESSFULLY CARRYING OUT THEIR INTENDED FUNCTION. THE OWNER SHALL NOT DUMP DIRTY WATER, OIL OR ANY OTHER LIQUIDS OR SOLIDS INTO THE STORM WATER CONVEYANCE SYSTEM, DETENTION PONDS OR ANY OTHER BMPS. VEHICLES SHALL NOT BE DRIVEN ACROSS BMPS.
THE OWNER SHALL BE RESPONSIBLE FOR THE SHORT TERM AND LONG TERM OPERATION AND MAINTENANCE MEASURES FOR THE POST CONSTRUCTION STORM WATER MANAGEMENT FACILITIES.

BMP 5.8.1 - ROOFTOP DISCONNECTION (INDIVIDUAL LOT OWNER)
- THE VEGETATED AREA DOWNSTREAM OF THE DOWNSPOUT DISCHARGE SHOULD BE MAINTAINED IN GOOD CONDITION, AND ANY BARE SPOTS REVEGETATED AS SOON AS POSSIBLE.
- MOWING SHOULD BE DONE ONLY WHEN THE SOIL IS DRY, IN ORDER TO PREVENT TRACKING DAMAGE TO VEGETATION, SOIL COMPACTION, AND FLOW CONCENTRATIONS. THE HEIGHT OF THE VEGETATION SHOULD NEVER CUT SHORTER THAN THE DESIGN FLOW DEPTH.
- UNWANTED OR INVASIVE GROWTH SHOULD BE REMOVED ON AN ANNUAL BASIS. VEGETATIVE COVER SHOULD BE SUSTAINED AT 85% AND REESTABLISHED IF DAMAGE GREATER THAN 50% IS OBSERVED. WHENEVER POSSIBLE, DEFICIENCIES IN VEGETATION ARE TO BE MOLLIFIED WITHOUT THE USE OF FERTILIZERS OR PESTICIDES.
- IF A VEGETATED AREA EXHIBITS SIGNS OF POOR DRAINAGE AND/OR VEGETATIVE COVER, PERIODIC SOIL AERATION AND LIMING MAY BE NEEDED.

BMP 6.4.2: INFILTRATION BASIN (HOMEOWNER'S ASSOCIATION)
- CATCH BASINS AND INLETS (UPGRADIENT OF INFILTRATION BASIN) SHOULD BE INSPECTED AND CLEANED AT LEAST TWO TIMES PER YEAR AND AFTER RUNOFF EVENTS.
- THE VEGETATION ALONG THE SURFACE OF THE INFILTRATION BASIN SHOULD BE MAINTAINED IN GOOD CONDITION, AND ANY BARE SPOTS REVEGETATED AS SOON AS POSSIBLE.
- VEHICLES SHOULD NOT BE PARKED OR DRIVEN ON AN INFILTRATION BASIN, AND CARE SHOULD BE TAKEN TO AVOID EXCESSIVE COMPACTION BY MOWERS.
- INSPECT THE BASIN AFTER RUNOFF EVENTS AND MAKE SURE THAT RUNOFF DRAINS DOWN WITHIN 72 HOURS. MOSQUITO'S SHOULD NOT BE A PROBLEM IF THE WATER DRAINS IN 72 HOURS. MOSQUITOES REQUIRE A CONSIDERABLY LONG BREEDING PERIOD WITH RELATIVELY STATIC WATER LEVELS. SHOULD RUNOFF REMAIN IN THE BASIN FOR LONGER THAN 72 HOURS, THE OWNER SHALL CONTACT A REGISTERED PROFESSIONAL TO DETERMINE REMEDIATIVE MEASURES.
- ALSO INSPECT FOR ACCUMULATION OF SEDIMENT, DAMAGE TO OUTLET CONTROL STRUCTURES, EROSION CONTROL MEASURES, SIGNS OF WATER CONTAMINATION/SPILLS, AND SLOPE STABILITY IN THE BERMS.
- MOW ONLY AS APPROPRIATE FOR VEGETATIVE COVER SPECIES.
- REMOVE ACCUMULATED SEDIMENT FROM BASIN AS REQUIRED. RESTORE ORIGINAL CROSS SECTION AND INFILTRATION RATE. PROPERLY DISPOSE OF SEDIMENT.

BMP 6.4.5: RAIN GARDEN/BIORETENTION (HOMEOWNER'S ASSOCIATION)
- PROPERLY DESIGNED AND INSTALLED BIORETENTION AREAS REQUIRE SOME REGULAR MAINTENANCE.
- WHILE VEGETATION IS BEING ESTABLISHED, PRUNING AND WEEDING MAY BE REQUIRED.
- DETRITUS MAY ALSO NEED TO BE REMOVED EVERY YEAR. PERENNIAL PLANTINGS MAY BE CUT DOWN AT THE END OF THE GROWING SEASON.
- MULCH SHOULD BE RE-SPREAD WHEN EROSION IS EVIDENT AND BE REPLENISHED AS NEEDED. ONCE EVERY 2 TO 3 YEARS THE ENTIRE AREA MAY REQUIRE MULCH REPLACEMENT.
- BIORETENTION AREAS SHOULD BE INSPECTED AT LEAST TWO TIMES PER YEAR FOR SEDIMENT BUILDUP, EROSION, VEGETATIVE CONDITIONS, ETC.
- DURING PERIODS OF EXTENDED DROUGHT, BIORETENTION AREAS MAY REQUIRE WATERING.
- TREES AND SHRUBS SHOULD BE INSPECTED TWICE PER YEAR TO EVALUATE HEALTH.

BMP 6.4.8: VEGETATED SWALE (HOMEOWNER'S ASSOCIATION)
MAINTENANCE ACTIVITIES TO BE DONE ANNUALLY AND WITHIN 48 HOURS AFTER EVERY MAJOR STORM EVENT (> 1 INCH RAINFALL DEPTH):
- INSPECT AND CORRECT EROSION PROBLEMS, DAMAGE TO VEGETATION, AND SEDIMENT AND DEBRIS ACCUMULATION (ADDRESS WHEN > 3 INCHES AT ANY SPOT OR COVERING VEGETATION)
- INSPECT VEGETATION ON SIDE SLOPES FOR EROSION AND FORMATION OF RILLS OR GULLIES, CORRECT AS NEEDED
- INSPECT FOR POOLS OF STANDING WATER; DEWATER AND DISCHARGE TO AN APPROVED LOCATION AND RESTORE TO DESIGN GRADE
- MOW AND TRIM VEGETATION TO ENSURE SAFETY, AESTHETICS, PROPER SWALE OPERATION, OR TO SUPPRESS WEEDS AND INVASIVE VEGETATION; DISPOSE OF CUTTINGS IN A LOCAL COMPOSTING FACILITY; MOW ONLY WHEN SWALE IS DRY TO AVOID RUTTING
- INSPECT FOR LITTER; REMOVE PRIOR TO MOWING
- INSPECT FOR UNIFORMITY IN CROSS-SECTION AND LONGITUDINAL SLOPE, CORRECT AS NEEDED
- INSPECT SWALE INLET (CURB CUTS, PIPES, ETC.) AND OUTLET FOR SIGNS OF EROSION OR BLOCKAGE, CORRECT AS NEEDED

MAINTENANCE ACTIVITIES TO BE DONE AS NEEDED:
- PLANT ALTERNATIVE GRASS SPECIES IN THE EVENT OF UNSUCCESSFUL ESTABLISHMENT
- RESEED BARE AREAS; INSTALL APPROPRIATE EROSION CONTROL MEASURES WHEN NATIVE SOIL IS EXPOSED OR EROSION CHANNELS ARE FORMING
- ROTOTILL AND REPLANT SWALE IF DRAW DOWN TIME IS MORE THAN 48 HOURS
- INSPECT AND CORRECT CHECK DAMS WHEN SIGNS OF ALTERED WATER FLOW (CHANNELIZATION, OBSTRUCTIONS, EROSION, ETC.) ARE IDENTIFIED
- WATER DURING DRY PERIODS, FERTILIZE, AND APPLY PESTICIDE ONLY WHEN ABSOLUTELY NECESSARY
- INSPECT SWALE IMMEDIATELY AFTER THE SPRING MELT, REMOVE RESIDUALS (E.G. SAND) AND REPLACE DAMAGED VEGETATION WITHOUT DISTURBING REMAINING VEGETATION.
- IF ROADSIDE OR PARKING LOT RUNOFF IS DIRECTED TO THE SWALE, MULCHING AND/OR SOIL AERATION/MANIPULATION MAY BE REQUIRED IN THE SPRING TO RESTORE SOIL STRUCTURE AND MOISTURE CAPACITY AND TO REDUCE THE IMPACTS OF DEICING AGENTS.
- USE NONTOXIC, ORGANIC DEICING AGENTS, APPLIED EITHER AS BLENDED, MAGNESIUM CHLORIDE-BASED LIQUID PRODUCTS OR AS PRETREATED SALT.
- USE SALT-TOLERANT VEGETATION IN SWALES.

POST-CONSTRUCTION STORMWATER MANAGEMENT BMP INSPECTION AND MAINTENANCE NOTES
1. NO STRUCTURES THAT ARE NOT COMPONENTS OF AN APPROVED BMP SHALL BE PERMITTED WITHIN OR ON TOP OF AN AREA DESIGNATED FOR STORMWATER INFILTRATION.
2. INFILTRATION BEDS SHALL BE INSPECTED BY A REGISTERED PROFESSIONAL ENGINEER LICENSED IN THE COMMONWEALTH OF PENNSYLVANIA ON THE FOLLOWING BASIS:
   - ANNUALLY FOR THE FIRST FIVE (5) YEARS.
   - ONCE EVERY THREE (3) YEARS THEREAFTER.

PCSM LONG TERM OPERATIONS AND MAINTENANCE REQUIREMENTS
UNTIL THE PERMITTEE OR CO-PERMITTEE HAS RECEIVED WRITTEN APPROVAL OF A NOTICE OF TERMINATION, THE PERMITTEE OR CO-PERMITTEE WILL REMAIN RESPONSIBLE FOR COMPLIANCE WITH THE PERMIT TERMS AND CONDITIONS INCLUDING LONG-TERM OPERATION AND MAINTENANCE OF ALL PCSM BMPS ON THE PROJECT SITE AND IS RESPONSIBLE FOR VIOLATIONS OCCURRING ON THE PROJECT SITE.
THE PERMITTEE OR CO-PERMITTEE SHALL BE RESPONSIBLE FOR LONG-TERM OPERATION AND MAINTENANCE OF PCSM BMPS UNLESS A DIFFERENT PERSON IS IDENTIFIED IN THE NOTICE OF TERMINATION AND HAS AGREED TO LONG-TERM OPERATION AND MAINTENANCE OF PCSM BMPS.
FOR ANY PROPERTY CONTAINING A PCSM BMP, THE PERMITTEE OR CO-PERMITTEE SHALL RECORD AN INSTRUMENT WITH THE RECORDER OF DEEDS WHICH WILL ASSURE DISCLOSURE OF THE PCSM BMP AND THE RELATED OBLIGATIONS IN THE ORDINARY COURSE OF A TITLE SEARCH OF THE SUBJECT PROPERTY. THE RECORDED INSTRUMENT MUST IDENTIFY THE PCSM BMP, PROVIDE FOR NECESSARY ACCESS RELATED TO LONG-TERM OPERATION AND MAINTENANCE FOR PCSM BMPS AND PROVIDE NOTICE THAT THE RESPONSIBILITY FOR LONG-TERM OPERATION AND MAINTENANCE OF THE PCSM BMP IS A COVENANT THAT RUNS WITH THE LAND THAT IS BINDING UPON AND ENFORCEABLE BY SUBSEQUENT GRANTEES, AND PROVIDE PROOF OF FILING WITH THE NOTICE OF TERMINATION UNDER § 102.7(B)(5) (RELATING TO PERMIT TERMINATION
THE PERSON RESPONSIBLE FOR PERFORMING LONG-TERM OPERATION AND MAINTENANCE MAY ENTER INTO AN AGREEMENT WITH ANOTHER PERSON INCLUDING A CONSERVATION DISTRICT, NONPROFIT ORGANIZATION, MUNICIPALITY, AUTHORITY, PRIVATE CORPORATION OR OTHER PERSON, TO TRANSFER THE RESPONSIBILITY FOR PCSM BMPS OR TO PERFORM LONG-TERM OPERATION AND MAINTENANCE AND PROVIDE NOTICE THEREOF TO THE DEPARTMENT.
A PERMITTEE OR CO-PERMITTEE THAT FAILS TO TRANSFER LONG-TERM OPERATION AND MAINTENANCE OF THE PCSM BMP OR OTHERWISE FAILS TO COMPLY WITH THIS REQUIREMENT SHALL REMAIN JOINTLY AND SEVERALLY RESPONSIBLE WITH THE LANDOWNER FOR LONG-TERM OPERATION AND MAINTENANCE OF THE PCSM BMPS LOCATED ON THE PROPERTY.

GENERAL NOTES
1. THE PERMITTEE SHALL PROVIDE ENGINEERING CONSTRUCTION OVERSIGHT FOR THE PROPOSED STORMWATER BMPS. ADDITIONAL SOIL TESTING MAY BE REQUIRED PRIOR TO THE INSTALLATION OF INFILTRATION BMPS TO ENSURE PROPER LOCATION AND FUNCTION. A LICENSED PROFESSIONAL KNOWLEDGEABLE IN THE DESIGN AND CONSTRUCTION OF STORMWATER BMPS, PREFERABLY THE DESIGN ENGINEER, SHALL CONDUCT THE OVERSIGHT.
2. IF UNFAVORABLE CONDITIONS HAVE BEEN ENCOUNTERED DURING THE INSTALLATION OF THE SEEPAGE/INFILTRATION SYSTEMS (I.E. GROUNDWATER AND/OR BEDROCK, ETC.), THE OWNER/ENGINEER SHOULD BE NOTIFIED AND THE PROPOSED INFILTRATION SYSTEM SHOULD BE RELOCATED TO A MORE SUITABLE LOCATION ON THE PROPERTY.
3. THE ANTICIPATED WASTES ARE GENERAL CONSTRUCTION WASTES. THE OPERATOR SHALL REMOVE FROM THE SITE, RECYCLE, OR DISPOSE OF ALL BUILDING MATERIALS AND WASTES IN ACCORDANCE WITH THE DEPARTMENT'S SOLID WASTE MANAGEMENT REGULATIONS AT 25 PA. CODE 260.1 ET SEQ., 271.1 ET SEQ., AND 287.1 ET SEQ. THE CONTRACTOR SHALL NOT ILLEGALLY BURY, DUMP, OR DISCHARGE ANY BUILDING MATERIAL OR WASTES AT THE SITE.
4. IN THE EVENT OF FAILURE OF THE PROPOSED BMP'S, THE PERMITTEE SHALL CONSULT A REGISTERED PROFESSIONAL ENGINEER TO DETERMINE THE CAUSE OF THE FAILURE AND REMEDIATIVE MEASURES.

FAILURE OF THE BMP'S IS DEFINED AS FOLLOWS:
BMP 6.4.2: INFILTRATION BASIN - DRAINAGE OF COLLECTED WATER TAKES LONGER THAN 72 HOURS AFTER A STORM EVENT
BMP 6.4.3: SUBSURFACE INFILTRATION BED - DRAINAGE OF COLLECTED WATER TAKES LONGER THAN 72 HOURS AFTER A STORM EVENT

5. THE PROPOSED TREE PLANTINGS ARE TO BE CONSIDERED PERMANENT BMPS AND ARE NOT TO BE REMOVED WITHOUT PRIOR CONSENT BY THE TOWNSHIP, CHESTER COUNTY CONSERVATION DISTRICT AND THE DEPARTMENT.

INDIVIDUAL BMP CONSTRUCTION SEQUENCE AND CRITICAL STAGES OF IMPLEMENTATION
DURING CONSTRUCTION AND IMPLEMENTATION OF THE PROPOSED PERMANENT BMP'S, THE FOLLOWING STAGES OF CONSTRUCTION SHALL BE IMPLEMENTED UNDER THE SUPERVISION OF A LICENSED PROFESSIONAL OR DESIGNATED INDIVIDUAL:

DURING STAGES DENOTED AS (CRITICAL STAGES), A LICENSED PROFESSIONAL OR DESIGNATED INDIVIDUAL SHALL BE ON-SITE FOR CONSTRUCTION OBSERVATION.

BMP 6.4.2: INFILTRATION BASIN
1. UPON STABILIZATION OF ALL UPSLOPE DISTURBED AREAS, INITIATE CONVERSION OF THE SEDIMENT BASIN TO THE PERMANENT INFILTRATION BASIN.
   a. FLUSH ACCUMULATED SEDIMENT FROM THE CONTRIBUTING STORM SEWER SYSTEM.
   b. DEWATER SEDIMENT BASIN.
   c. REMOVE BAFFLES, CLEANOUT STAKES, DEWATERING FACILITIES AND SEDIMENT RISER.
   d. (CRITICAL STAGES) INSTALL PERMANENT OUTLET PLATE.
   e. REMOVE ALL SEDIMENT FROM THE BASIN.
   f. INITIATE INSTALLATION OF INFILTRATION BED IN ACCORDANCE WITH THE INDIVIDUAL BMP CONSTRUCTION SEQUENCE AND CRITICAL STAGES OF IMPLEMENTATION
      NOTE: LEAVE STONE BERM AROUND OUTLET STRUCTURE IN PLACE AT THIS TIME.
   g. (CRITICAL STAGES) REPLACE BOTTOM 18" OF SOIL WITH AMENDED SOIL AND IMMEDIATELY IMPLEMENT PERMANENT VEGETATIVE COVER. LINE BASIN BOTTOM AND SIDES WITH EROSION CONTROL BLANKET.
   h. UPON STABILIZATION OF BASIN BOTTOM, REMOVE PLYWOOD COVERS FROM INFILTRATION BED INLETS.

BMP 6.4.5: RAIN GARDEN/BIORETENTION
1. (CRITICAL STAGE) INITIATE INSTALLATION OF THE RAIN GARDEN WITH INLET AND DISCHARGE PIPE.
2. GRADE AREA BEHIND BERM TO PERMANENT SUBGRADE.
3. (CRITICAL STAGE) PLACE 12" OF AMENDED SOIL ON BASIN BOTTOM AND IMMEDIATELY IMPLEMENT PERMANENT VEGETATIVE COVER. LINE BASIN SIDES WITH EROSION CONTROL BLANKET.

BMP 6.4.8: VEGETATED SWALE
1. (CRITICAL STAGE) CONSTRUCT SWALE. IMMEDIATELY IMPLEMENT PERMANENT VEGETATIVE SURFACE STABILIZATION AND INSTALL EROSION CONTROL BLANKET WITHIN SWALE.

INFILTRATION FACILITY NOTES
1. AREAS TO BE USED FOR STORMWATER INFILTRATION (HEREAFTER, "SUBJECT AREAS") SHALL BE DELINEATED WITH ORANGE SAFETY FENCE PRIOR TO START OF CONSTRUCTION.
2. COMPACTION OF THE SUBJECT AREAS IS PROHIBITED. EQUIPMENT AND OTHER TRAFFIC SHALL BE PROHIBITED FROM TRAVELING OVER THE SUBJECT AREAS, EXCEPT AS PROVIDED FOR HEREIN. ONLY HAND-HELD EQUIPMENT SHALL BE USED WITHIN SUBJECT AREAS. OTHER EQUIPMENT MAY BE USED AROUND THE PERIMETER - BUT OUTSIDE OF- SUBJECT AREAS FOR PURPOSES OF EXCAVATION AND TO SUPPLY SOILS AND AGGREGATE.
3. THE BOTTOM OF INFILTRATION BEDS SHALL BE SCARIFIED IMMEDIATELY PRIOR TO THE PLACEMENT OF THE GEOTEXTILE FABRIC OR THE LOWEST AGGREGATE SEPARATION LAYER, WHICHEVER IS IN CONTACT WITH THE SOIL SUBGRADE, AT THE BOTTOM OF THE BED.
4. ONLY UNIFORMLY GRADED, CLEAN AGGREGATE, FREE OF FINES, SLATE, SHALE, CLAY, SILT, AND VEGETATIVE MATERIAL SHALL BE USED. THE AGGREGATE SHALL HAVE A MINIMUM VOID RATIO OF 40% AND A WASH LOSS OF NO MORE THAN 0.5%. THESE VALUES APPLY TO BOTH THE AGGREGATE WITHIN THE BED AND ANY AGGREGATE USED AS A SEPARATION LAYER. THE SUPPLIER OF THE AGGREGATE SHALL PROVIDE CERTIFICATION OF THE VOID RATIO OF THE AGGREGATE DELIVERED TO THE SITE. THE DESIGN ENGINEER SHALL VERIFY THAT THE VOID RATIO MEETS OR EXCEEDS THE REQUIREMENTS OF THE DESIGN AND SUBMIT SUCH VERIFICATION TO THE TOWNSHIP.
5. WHEREVER DRAINAGE FILTER FABRIC IS SPECIFIED, IT SHALL BE PLACED IN ACCORDANCE WITH THE MANUFACTURER'S DIRECTIONS, INCLUDING PIPE PENETRATIONS, AND SHALL OVERLAP A MINIMUM OF EIGHTEEN (18) INCHES.
6. SUBJECT AREAS SHALL BE PROTECTED DURING CONSTRUCTION. SEDIMENT SHALL NOT BE ALLOWED TO BE WASHED BACK INTO SUBJECT AREAS WHEN THE BOTTOM OF THE FACILITY IS OPEN OR WHEN THE AGGREGATE IS IN PLACE AND EXPOSED. DURING SITE CONSTRUCTION, ALL INFILTRATION FACILITY COMPONENTS SHALL BE PROTECTED FROM SEDIMENTATION USING STORM INLET PROTECTION IN CONFORMANCE WITH THE PENNSYLVANIA DEPARTMENT OF ENVIRONMENTAL PROTECTION (DEP) CHAPTER 102 REGULATIONS, AS AMENDED, AND THE EROSION AND SEDIMENTATION POLLUTION CONTROL MANUAL, AS AMENDED. INLET PROTECTION SHALL REMAIN UNTIL THE CONTRIBUTORY DRAINAGE AREA HAS ACHIEVED FULL STABILIZATION.
7. IF SEDIMENT DOES ENTER INTO A SUBJECT AREA, THE CONTRACTOR SHALL CLEAN OUT THE SEDIMENT TO THE TOWNSHIP'S SATISFACTION. THIS MAY REQUIRE THE RECONSTRUCTION OF PORTIONS OF OR THE ENTIRETY OF THE SYSTEM.
8. A MINIMUM TWO (2)-FOOT SEPARATION SHALL BE PROVIDED BETWEEN THE SEASONAL HIGH GROUNDWATER TABLE OR BEDROCK (WHICHEVER IS HIGHER) AND THE BOTTOM OF THE INFILTRATION FACILITY. IF GROUNDWATER AND/OR BEDROCK ARE ENCOUNTERED WITHIN AND/OR ABOVE THIS 2-FOOT ZONE DURING CONSTRUCTION, THE DEVELOPER, THE DESIGN ENGINEER, THE TOWNSHIP, AND THE TOWNSHIP ENGINEER SHALL BE NOTIFIED IN WRITING WITHIN TWENTY-FOUR (24) HOURS OF SUCH DISCOVERY. UPON REVIEW OF THE ACTUAL SITE CONDITIONS THE DESIGN ENGINEER SHALL SUBMIT REMEDIAL RECOMMENDATIONS

PCSM REPORTING AND RECORDKEEPING
THE PCSM PLAN, INSPECTION REPORTS AND MONITORING RECORDS SHALL BE AVAILABLE FOR REVIEW AND INSPECTION BY THE DEPARTMENT OR THE CONSERVATION DISTRICT.

FINAL CERTIFICATION.
THE PERMITTEE SHALL INCLUDE WITH THE NOTICE OF TERMINATION ''RECORD DRAWINGS'' WITH A FINAL CERTIFICATION STATEMENT FROM A LICENSED PROFESSIONAL, WHICH READS AS FOLLOWS:

''I (NAME) DO HEREBY CERTIFY PURSUANT TO THE PENALTIES OF 18 PA.C.S.A. § 4904 TO THE BEST OF MY KNOWLEDGE, INFORMATION AND BELIEF, THAT THE ACCOMPANYING RECORD DRAWINGS ACCURATELY REFLECT THE AS-BUILT CONDITIONS, ARE TRUE AND CORRECT, AND ARE IN CONFORMANCE WITH CHAPTER 102 OF THE RULES AND REGULATIONS OF THE DEPARTMENT OF ENVIRONMENTAL PROTECTION AND THAT THE PROJECT SITE WAS CONSTRUCTED IN ACCORDANCE WITH THE APPROVED PCSM PLAN, ALL APPROVED PLAN CHANGES AND ACCEPTED CONSTRUCTION PRACTICES.''
(1) THE PERMITTEE SHALL RETAIN A COPY OF THE RECORD DRAWINGS AS A PART OF THE APPROVED PCSM PLAN.
(2) THE PERMITTEE SHALL PROVIDE A COPY OF THE RECORD DRAWINGS AS A PART OF THE APPROVED PCSM PLAN TO THE PERSON IDENTIFIED IN THIS SECTION AS BEING RESPONSIBLE FOR THE LONG-TERM OPERATION AND MAINTENANCE OF THE PCSM BMPS.

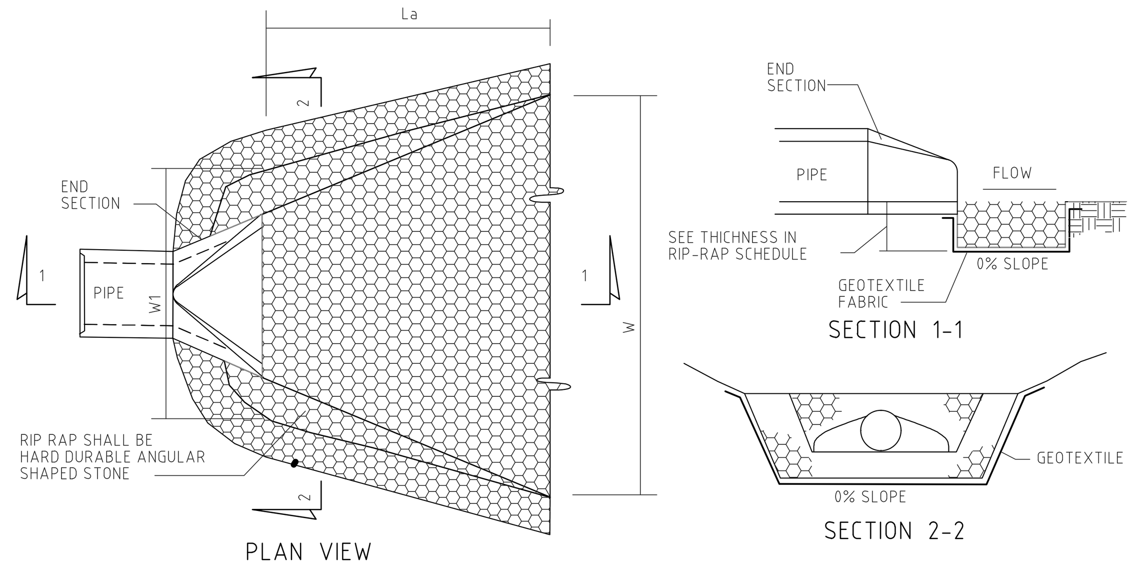

PERCENT PASSING (SQUARE OPENING)						
PENNDOT CLASSIFICATION CLASS, SIZE NO.	R-8	R-7	R-6	R-5	R-4	R-3
ROCK SIZE (INCH)						
48	100×					
30		100×				
24	15-50		100×			
18		15-50		100×		
15	0-15					
12			15-50		100×	
9		0-15		15-50		
6			0-15		15-50	100×
4				0-15		
3					0-15	15-50
2						0-15
NOMINAL PLACEMENT THICKNESS (INCH)	72"	45"	36"	27"	18	9"

× MAXIMUM ALLOWABLE ROCK SIZE

RIP RAP CHART					
END SECTION NO.	PIPE DIA. (IN)	La (FT)	W (FT)	W1 (FT)	PENNDOT CLASSIFICATION
ES-1	15	8.0	11.75	3.75	R-4
ES-2	15	8.0	11.75	3.75	R-4
ES-3	30	16.0	23.50	7.50	R-4
ES-4	15	8.0	11.75	3.75	R-4
ES-5	15	8.0	11.75	3.75	R-4
ES-6	15	9.0	12.75	3.75	R-4
ES-7	15	8.0	11.75	3.75	R-4
ES-8	36	20.0	29.00	9.0	R-6
ES-9	12	12.0	18.00	6.0	R-4

RIP RAP APRON DETAIL

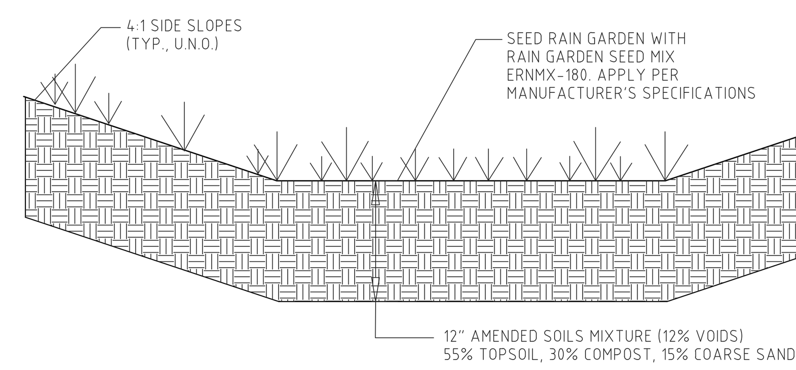

RAIN GARDEN NO.	ELEVATIONS			CONTOUR AREA	
	TOP OF BERM	BOTTOM INVERT	SPILLWAY INVERT	AT BERM	BOTTOM INVERT
1	520.50	518.80	520.00	4,301	2,500
2	522.00	520.00	---	4,461	1,987
3	530.00	528.50	529.50	13,500	8,503
4	530.00	528.50	529.50	4,951	7,566
5	505.00	503.00	504.50	7,856	5,020

RAIN GARDEN DETAIL

RAIN GARDEN MIX
ERNMX-180
SEEDING RATE: 20 LB PER ACRE WITH A COVER CROP OF GRAIN RYE AT 30 LB PER ACRE

39.0%	SCHIZACHYRIUM SCOPARIUM, 'CAMPER'	(LITTLE BLUESTEM, 'CAMPER')
15.0%	ELYMUS VIRGINICUS, PA ECOTYPE	(VIRGINIA WILDRYE, PA ECOTYPE)
8.0%	CHASMANTHIUM LATIFOLIUM, WV ECOTYPE	(RIVER OATS, WV ECOTYPE)
6.4%	PANICUM RIGIDULUM, PA ECOTYPE	(REDTOP PANICGRASS, PA ECOTYPE)
4.0%	CHAMAECRISTA FASCICULATA, PA ECOTYPE	(PARTRIDGE PEA, PA ECOTYPE)
4.0%	ECHINACEA PURPUREA	(PURPLE CONEFLOWER)
3.0%	COREOPSIS LANCEOLATA	(LANCELEAF COREOPSIS)
3.0%	RUDBECKIA HIRTA, COASTAL PLAIN NC ECOTYPE	(BLACKEYED SUSAN, COASTAL PLAIN NC ECOTYPE)
2.0%	CAREX VULPINOIDEA, PA ECOTYPE	(FOX SEDGE, PA ECOTYPE)
2.0%	HELIOPSIS HELIANTHOIDES, PA ECOTYPE	(OXEYE SUNFLOWER, PA ECOTYPE)
2.0%	VERBENA HASTATA, PA ECOTYPE	(BLUE VERVAIN, PA ECOTYPE)
1.5%	ASCLEPIAS INCARNATA, PA ECOTYPE	(SWAMP MILKWEED, PA ECOTYPE)
1.0%	JUNCUS EFFUSUS	(SOFT RUSH)
1.0%	LIATRIS SPICATA, PA ECOTYPE	(MARSH BLAZING STAR, PA ECOTYPE)
1.0%	PANICUM SPHAERONCARPON	(ROUND SEED PANICGRASS)
1.0%	PENSTEMON DIGITALIS, PA ECOTYPE	(TALL WHITE BEARDTONGUE, PA ECOTYPE)
0.5%	BAPTISIA AUSTRALIS, SOUTHERN WV ECOTYPE	(BLUE FALSE INDIGO, SOUTHERN WV ECOTYPE)
0.5%	CAREX SCOPARIA, PA ECOTYPE	(BLUNT BROOM SEDGE, PA ECOTYPE)
0.5%	EUPATORIUM COELESTINUM, VA ECOTYPE	(MISTFLOWER, VA ECOTYPE)
0.5%	PYCNANTHEMUM TENUIFOLIUM	(NARROWLEAF MOUNTAINMINT)
0.5%	SENNA HEBECARPA, VA & WV ECOTYPE	(WILD SENNA, VA & WV ECOTYPE)
0.5%	TRADESCANTIA OHIENSIS, PA ECOTYPE	(OHIO SPIDERWORT, PA ECOTYPE)
0.5%	ZIZIA AUREA, PA ECOTYPE	(GOLDEN ALEXANDERS, PA ECOTYPE)
0.4%	GEUM CANADENSE, PA ECOTYPE	(WHITE AVENS, PA ECOTYPE)
0.4%	MONARDA FISTULOSA, FORT INDIANTOWN GAP-PA ECOTYPE	(WILD BERGAMOT, FORT INDIANTOWN GAP-PA ECOTYPE)
0.3%	AGROSTIS PERENNANS, ALBANY PINE BUSH-NY ECOTYPE	(AUTUMN BENTGRASS, ALBANY PINE BUSH-NY ECOTYPE)
0.3%	ASTER LAEVIS, NY ECOTYPE	(SMOOTH BLUE ASTER, NY ECOTYPE)
0.3%	ASTER NOVAE-ANGLIAE, PA ECOTYPE	(NEW ENGLAND ASTER, PA ECOTYPE)
0.3%	HELENIUM AUTUMNALE, PA ECOTYPE	(COMMON SNEEZEWEED, PA ECOTYPE)
0.2%	ASTER UMBELLATUS, PA ECOTYPE	(FLAT TOPPED WHITE ASTER, PA ECOTYPE)
0.2%	SOLIDAGO PATULA, PA ECOTYPE	(ROUGHLEAF GOLDENROD, PA ECOTYPE)
0.1%	VERONICASTRUM VIRGINICUM, PA ECOTYPE	(CULVER'S ROOT, PA ECOTYPE)

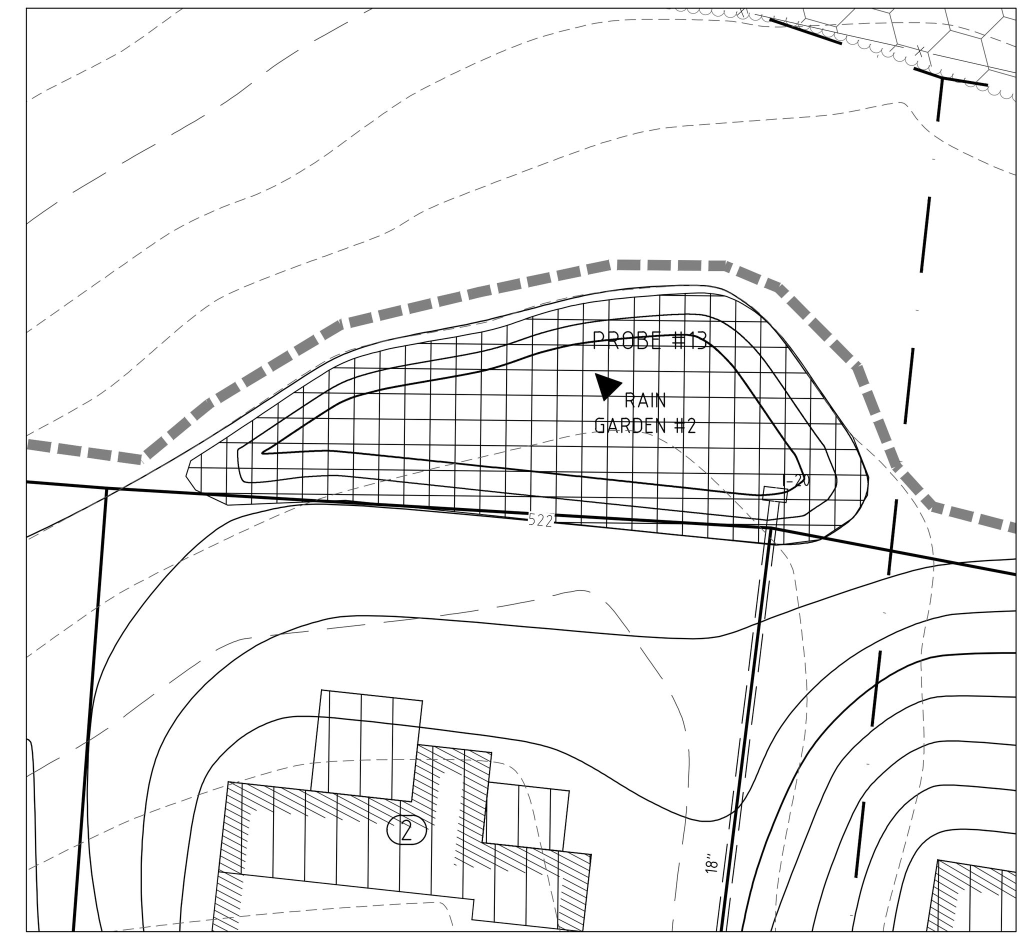

RAIN GARDEN #2

RAIN GARDEN #1

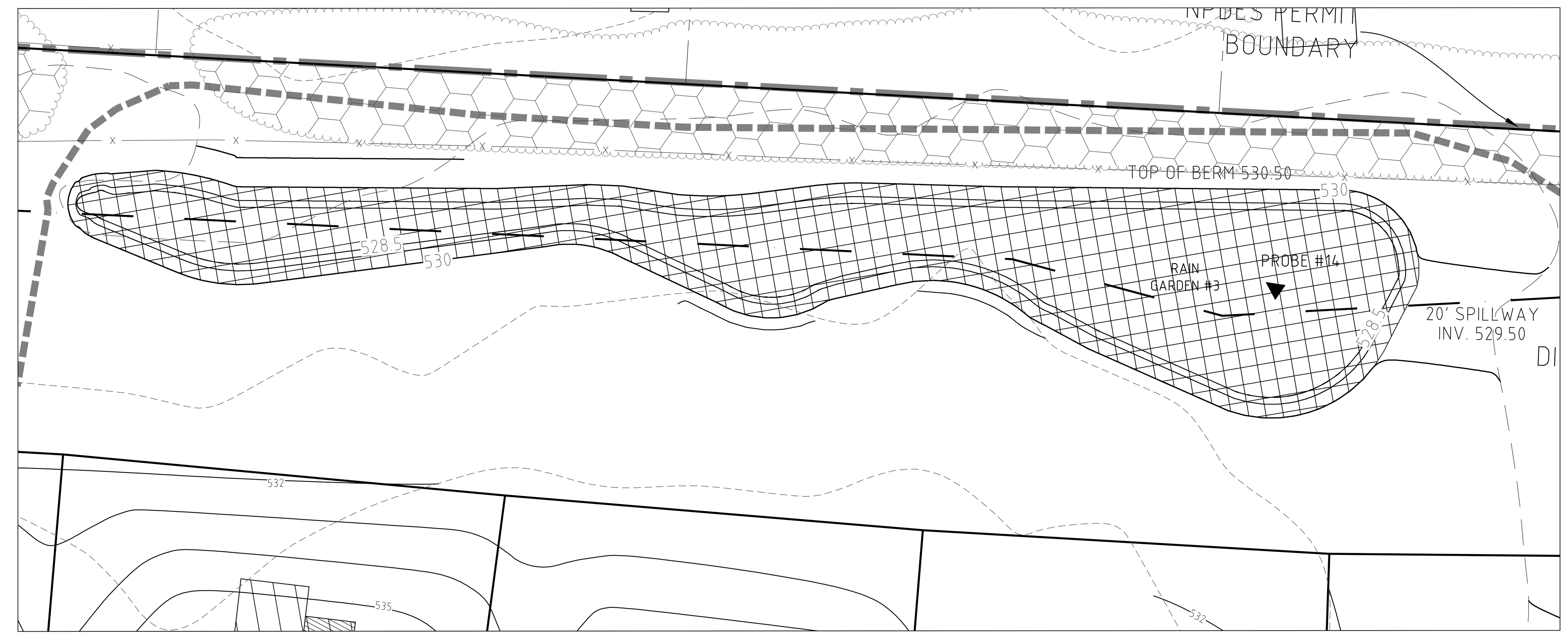

RAIN GARDEN #3

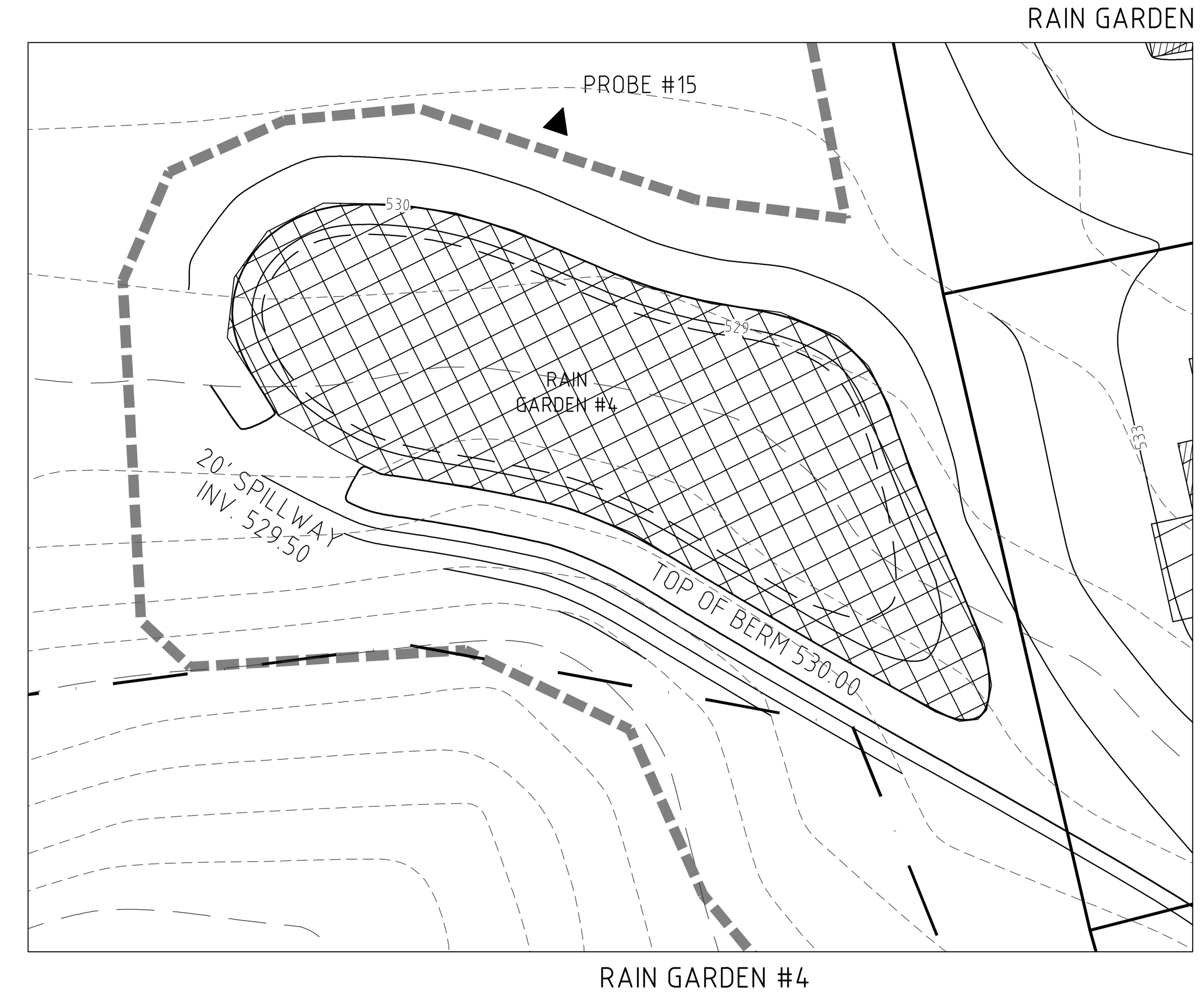

RAIN GARDEN #4

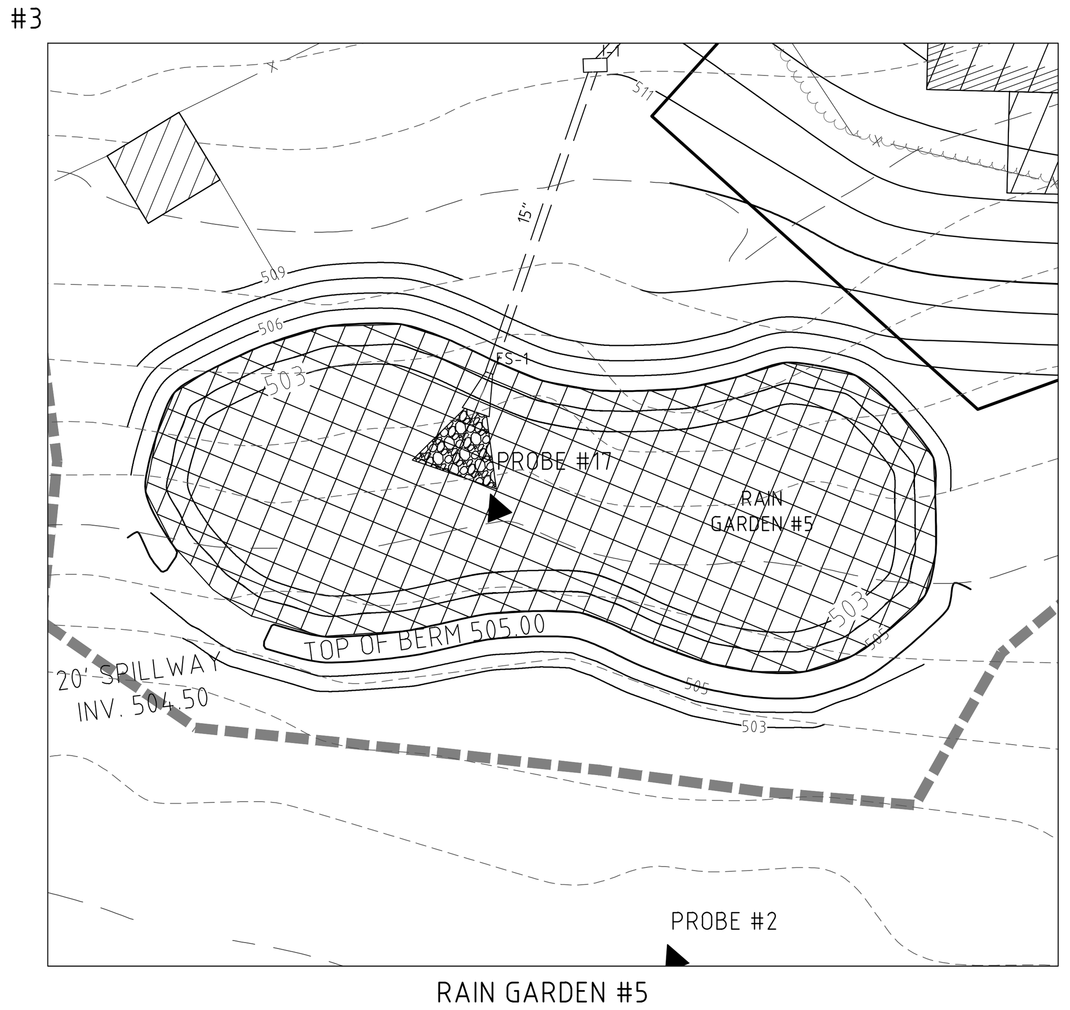

RAIN GARDEN #5

Revision	Date	Description	Rev.By
4	2/5/20	REVISED PER TOWNSHIP COMMENTS	MDH
3	12/20/19	REVISED PER TOWNSHIP COMMENTS	MDH
2	10/23/19	REVISED PER TOWNSHIP COMMENTS	MDH
1	7/24/19	REVISED PER TOWNSHIP COMMENTS	MDH

THIS DOCUMENT AND ALL INFORMATION AND WORK PRODUCT REPRESENTED BY AND CONTAINED HEREIN, IS THE SOLE AND EXCLUSIVE PROPERTY OF DH ENTERPRISES, INC. THE INFORMATION CONTAINED HEREIN IS LICENSED ONLY FOR LIMITED USE BY THE INTENDED RECIPIENT, AND NO LICENSE, PERMISSION OR AUTHORITY IS EXTENDED DIRECTLY OR IMPLIED, TO ANY PARTY WITHOUT THE EXPRESS WRITTEN PERMISSION OF DH ENTERPRISES, INC. COPYRIGHT, 2019, DH ENTERPRISES. ALL RIGHTS RESERVED

dh Enterprises
a civil engineering design & management firm
2815 PENN AVENUE
WEST LAWN, PA
610-927-4242

SEAL:
COMMONWEALTH OF PENNSYLVANIA
REGISTERED PROFESSIONAL
MICHAEL DUAIN HARTMAN
ENGINEER
No. PE059897

"TROUTBECK FARMS"
PRELIMINARY PLAN
PCSM DETAILS

CLIENT: MOSER CONSTRUCTION MANAGEMENT, LLC.
LOCATION: WILLISTOWN TOWNSHIP, CHESTER COUNTY, PENNSYLVANIA
DATE: JUNE 1, 2018

DRAWN BY: M.D.HARTMAN
PROJ. MANAGER: M.D.HARTMAN
SCALE: ---
SHEET: 24 of 25
PLAN NO. 17032-P-D-8.5

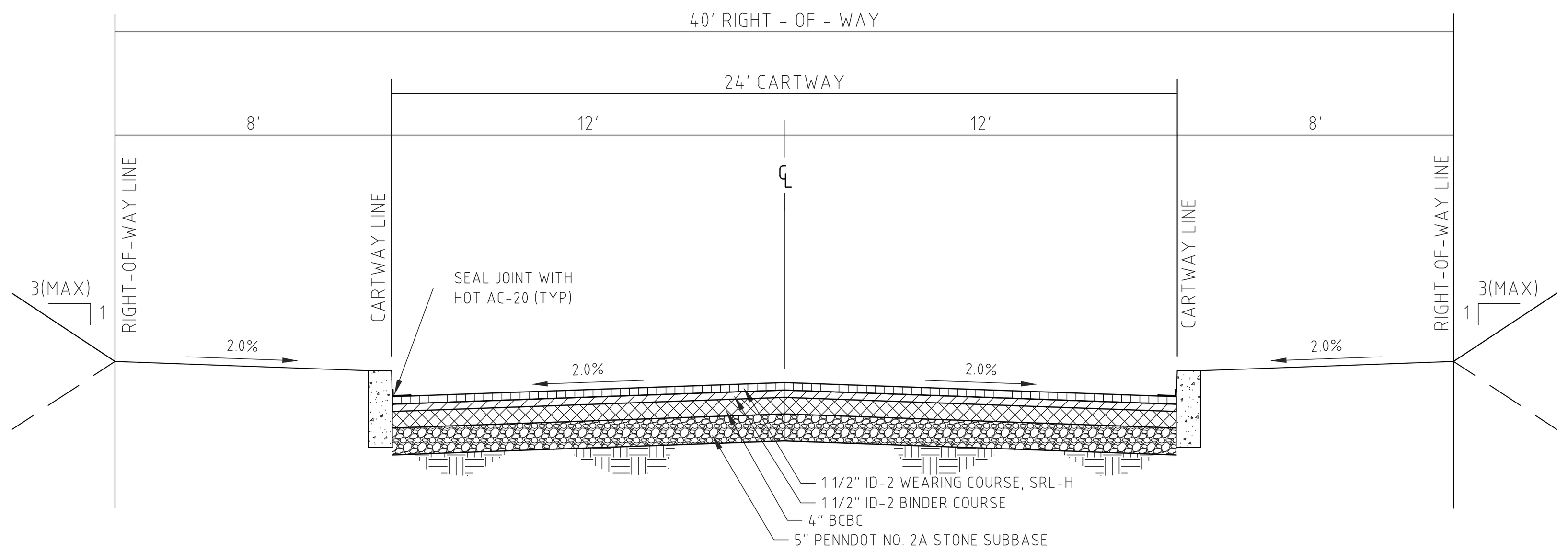

TYPICAL STREET CROSS SECTION

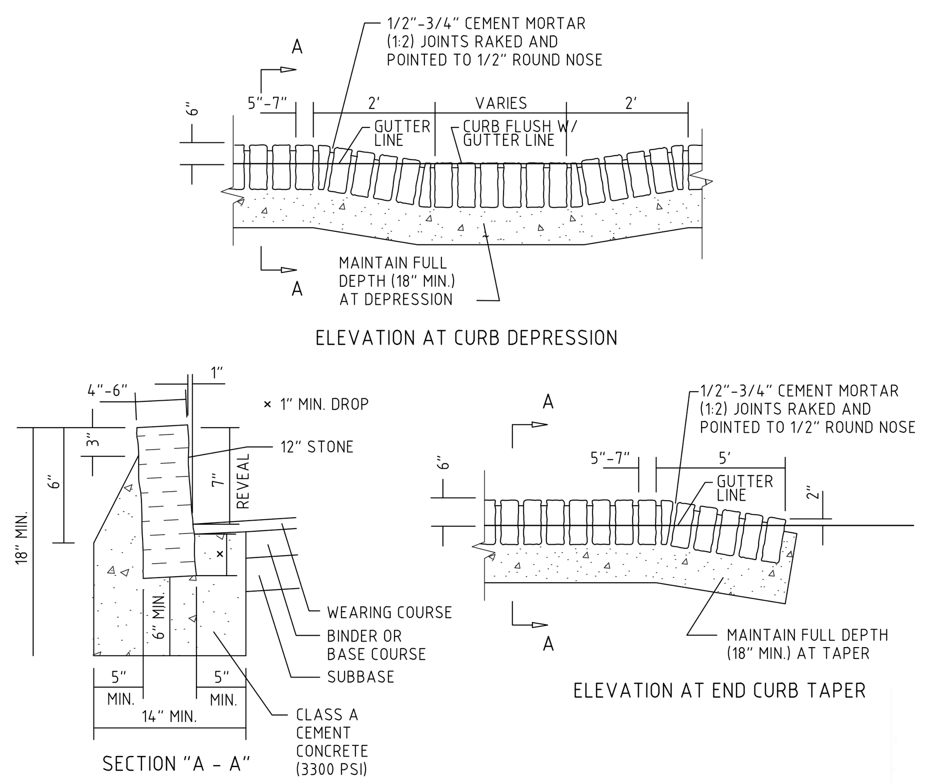

NOTE - ALL PROPOSED CURB IS BEHIND PENN DOT RIGHT OF WAY LINE

GRANITE (BELGIAN) BLOCK CURB DETAIL

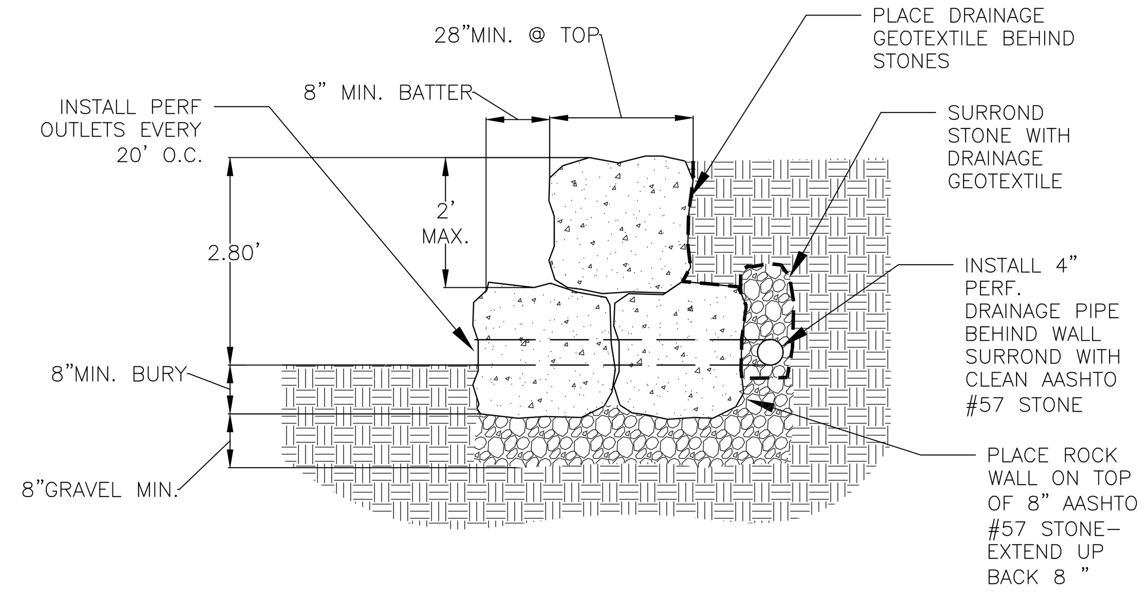

BOULDER RETAINING WALL

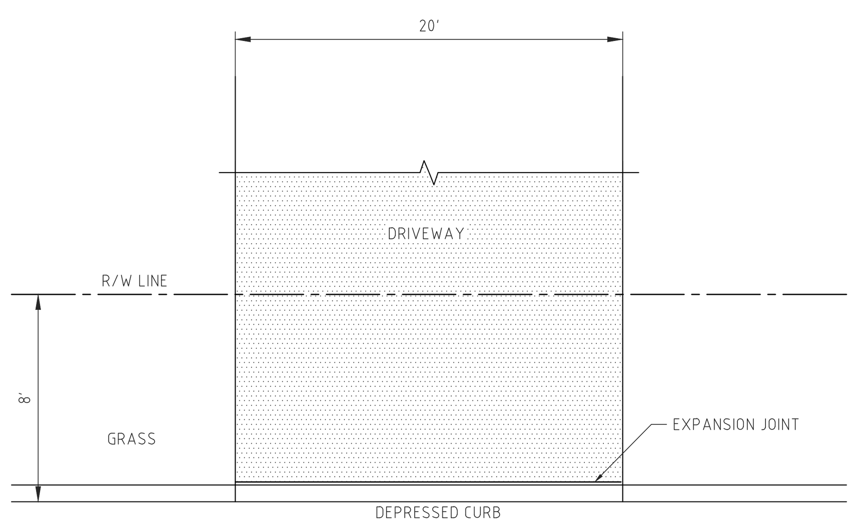

PLAN

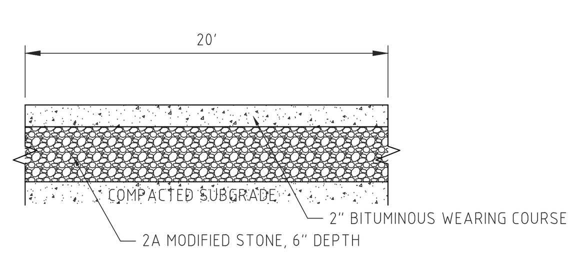

DRIVEWAY PAVEMENT DETAIL

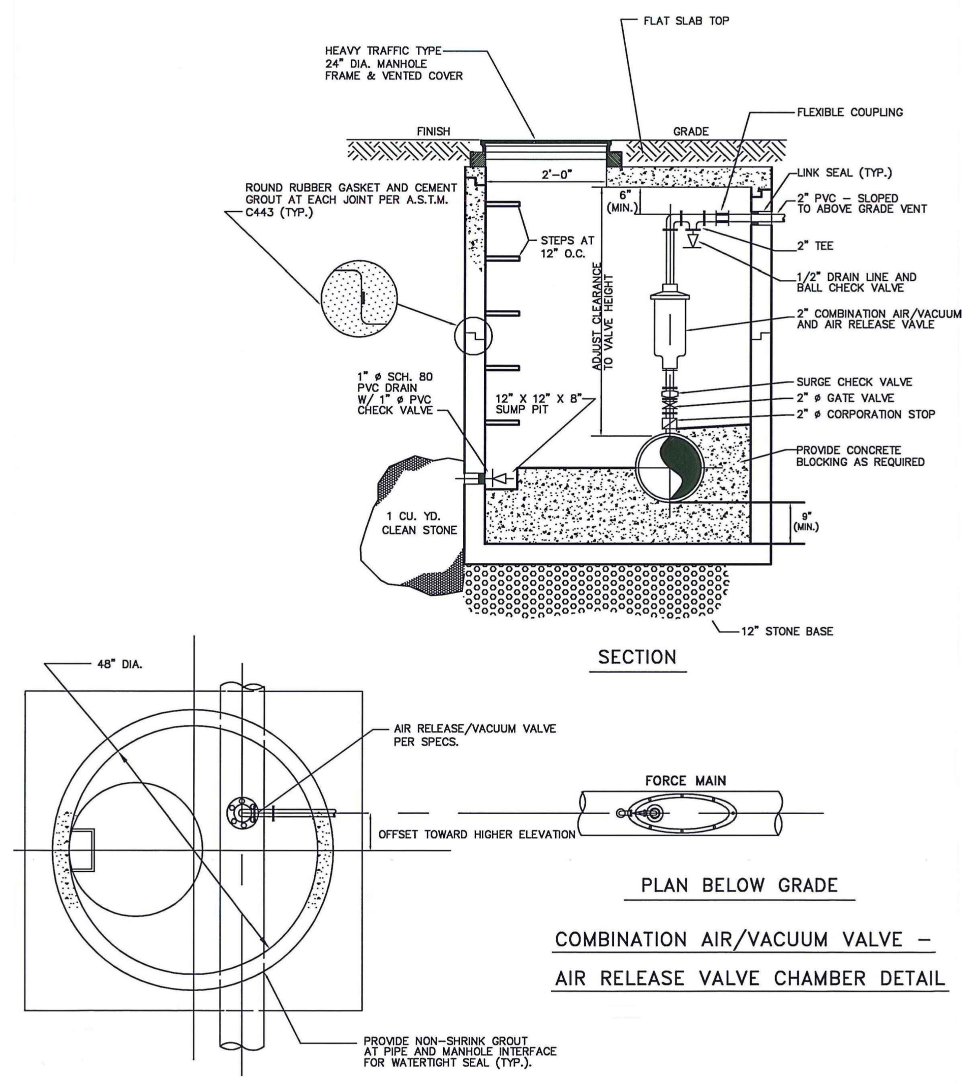

AIR RELEASE VALVE MANHOLE

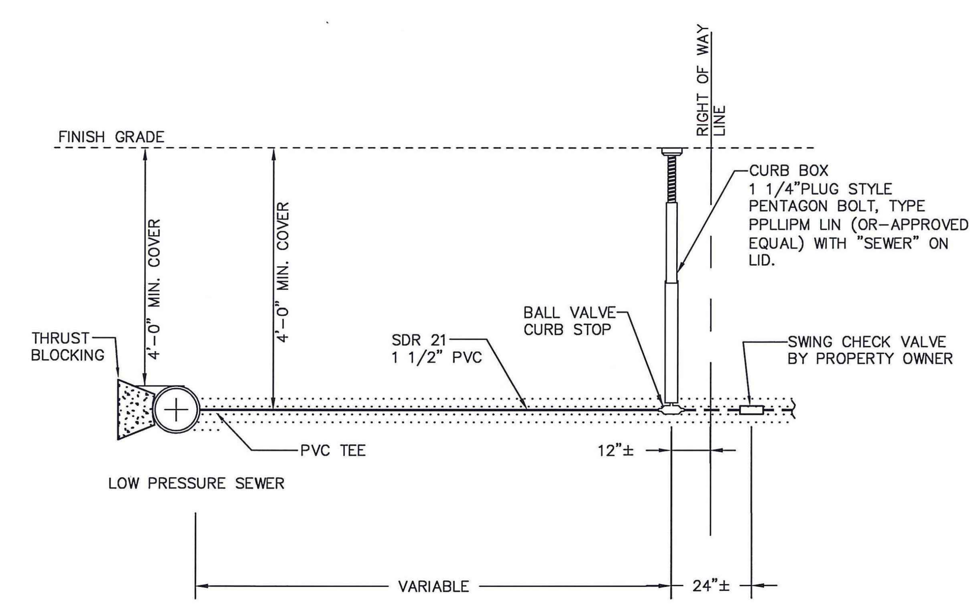

SERVICE LATERAL

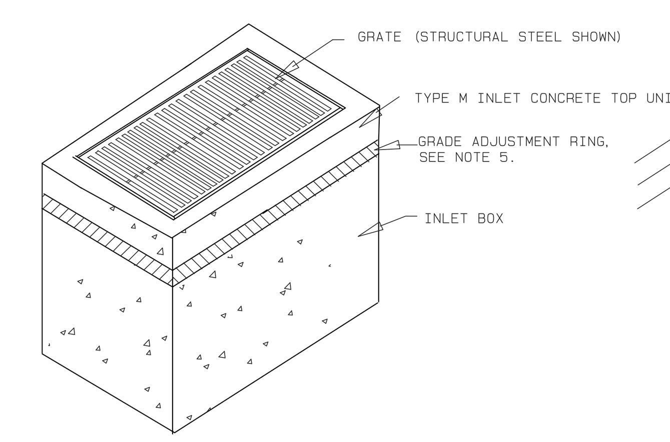

TYPE M INLET

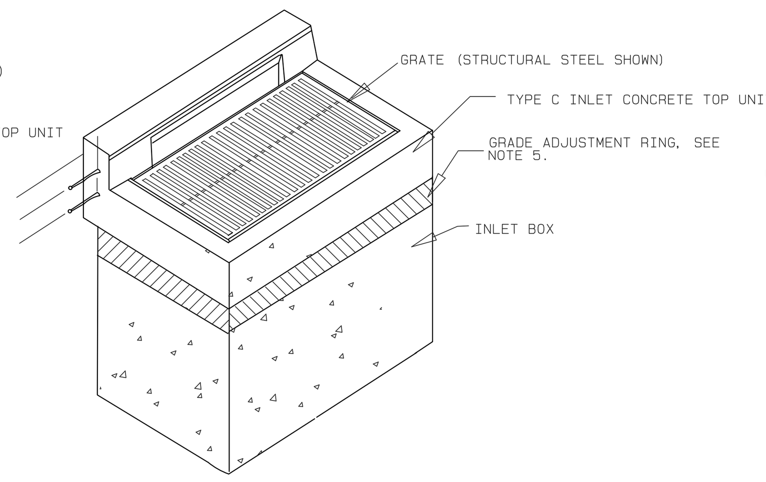

TYPE C INLET

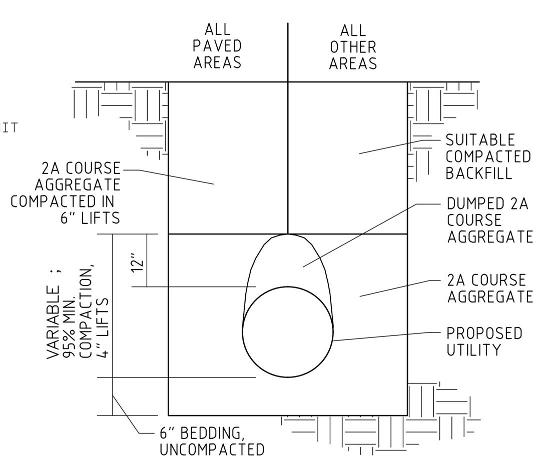

STORM SEWER PIPE BEDDING

NOTE: DO NOT PROVIDE STONE BEDDING OR BACKFILL AROUND DETENTION BASIN OUTLET PIPES.

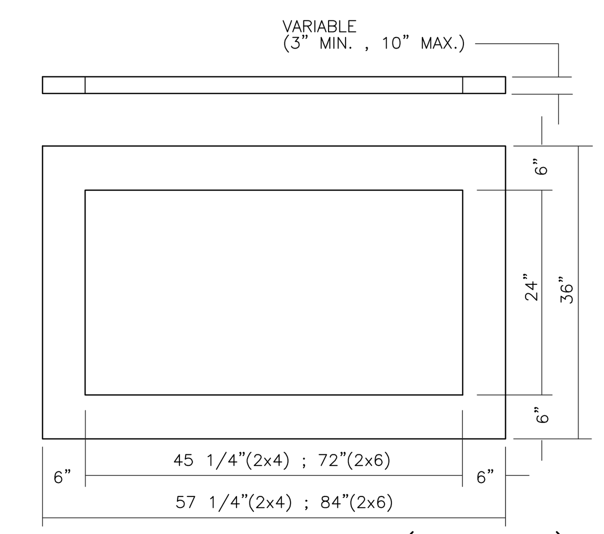

GRADE ADJUST RING (PRECAST)

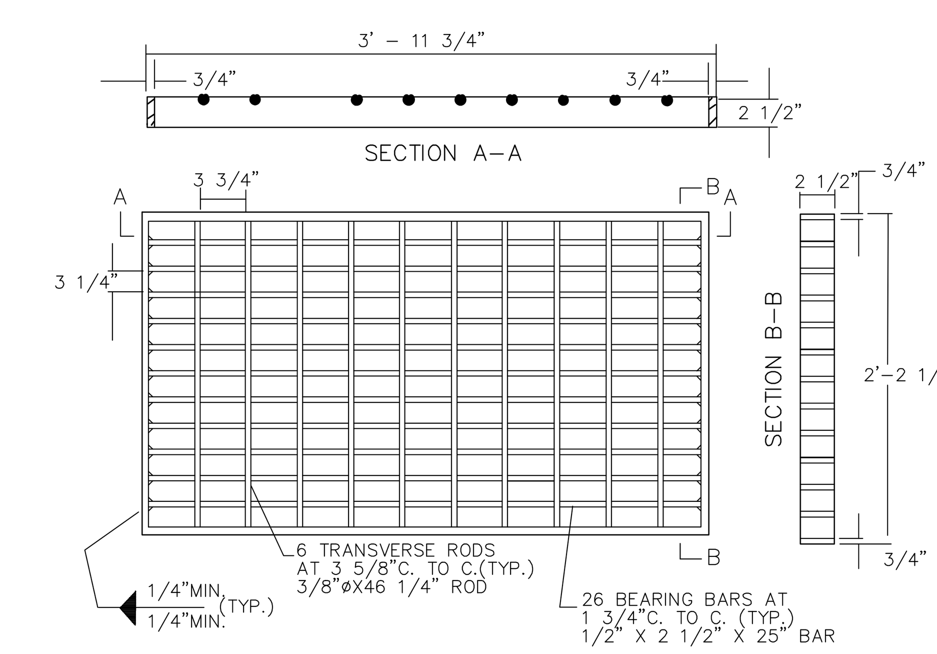

STRUCTURAL STEEL BICYCLE SAFE GRATE

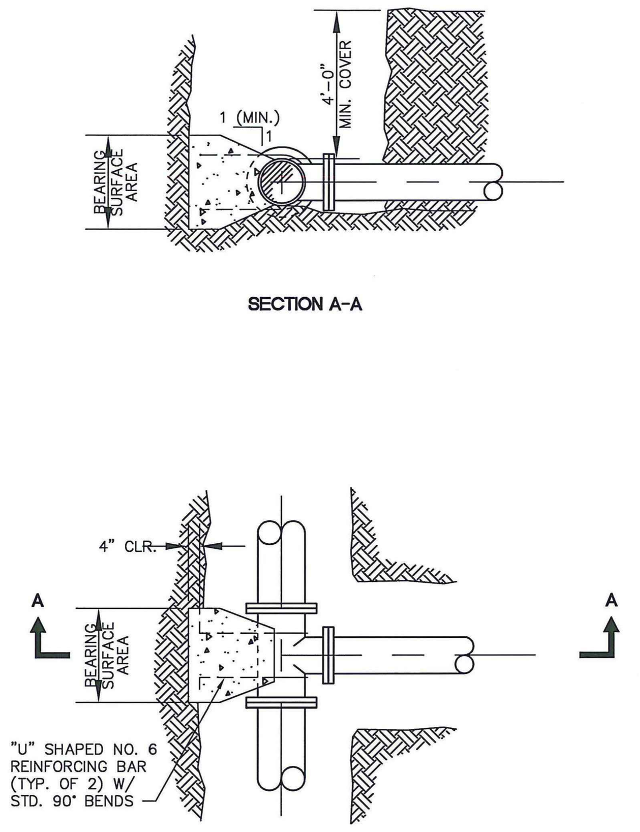

HORIZONTAL THRUST BLOCKING - TEE

BEARING SURFACE REQUIRED – SQ. FT. THRUST BLOCKING FOR HORIZONTAL AND VERTICAL DOWNWARD THRUSTS * 200 PSI WORKING PRESSURE																	
PIPE SIZES		UP TO 8"				10" AND 12"				16", 18" AND 20"				24"			
TYPE OF BEARING MATERIAL	ALLOWABLE LOAD ** TON/SQ FT	DEGREE OF BEND OR DEFLECTION ***															
		22.5	45	90	D.E.	22.5	45	90	D.E.	22.5	45	90	D.E.	22.5	45	90	D.E.
SAND	0.75	6.8	12.0	22.0	14.7	13.4	25.6	46.8	32.5	35.2	69.1	127.6	90.3	52.2	99.5	183.9	130.1
SOFT CLAY	1	5.2	9.2	16.4	11.1	10.0	19.2	35.0	24.4	26.4	51.8	95.7	68.0	39.2	74.7	137.9	97.5
SAND & GRAVEL	2	2.6	4.6	8.2	5.5	5.0	9.6	17.6	12.2	13.2	25.9	47.9	33.9	19.6	37.3	69.0	48.8
CLAY	4	2.0	2.4	4.2	2.8	2.6	4.8	8.8	6.1	6.6	13.0	23.9	16.9	9.8	18.7	34.5	24.4
SOFT ROCK	5	2.0	2.0	3.3	2.2	2.0	3.8	7.0	5.0	5.3	10.4	19.1	13.5	7.8	14.9	27.6	19.5
ROCK	15	2.0	2.0	2.0	0.8	2.0	2.0	2.4	1.6	2.0	3.5	6.4	4.5	2.6	5.0	9.2	6.5

* MUST BE ADJUSTED FOR TEST PRESSURES ABOVE 200 P.S.I.
** SOIL TESTING AGENCY TO ESTABLISH ALLOWABLE BEARING PRESSURE BASED ON FIELD CONDITIONS. AND BEARING AREAS ARE TO BE ADJUSTED ACCORDINGLY. (ALLOWANCES MUST BE MADE FOR SATURATED SOILS.)
*** D.E. DENOTES DEAD END AND APPLIES AT TEES AND PLUGS.

NOTES:

1. CONCRETE TO HAVE 2.500 P.S.I. MINIMUM 28 DAY COMPRESSIVE STRENGTH.
2. REINFORCING STEEL TO BE ASTM A-615, GRADE 60, EPOXY COATED DEFORMED BARS.
3. BARS ARE "U" SHAPED AROUND PIPE.
4. COAT ALL EXPOSED FERROUS SURFACES WITH TWO COATS OF COAL TAR PAINT OR APPROVED EQUAL PER MANUFACTURERS REQUIREMENTS.
5. COVER ALL FITTINGS AND JOINTS WITH POLYETHYLENE FILM BEFORE PLACING CONCRETE
6. CONCRETE MUST BEAR AGAINST UNDISTURBED SOIL.
7. KEEP CONCRETE CLEAR OF JOINTS AND LUGS.
8. FORM UNSUPPORTED AREAS OF CONCRETE.

SEWER FORCEMAIN THRUST BLOCKING BEARING SURFACES TABLE

MINIMUM THRUST BLOCKING DIMENSIONS FOR VERTICAL UPWARD THRUST 200 P.S.I. TEST PRESSURE *									
	DEGREE OF BEND OR DEFLECTION								
PIPE SIZES (IN.)	11.25	22.5	45	11.25	22.5	45	11.25	22.5	45
	LENGTH (FT.)			WIDTH (FT.)			DEPTH (FT.)		
6–8	4.0	4.5	6.5	3.0	4.0	4.5	3.0	4.0	5.0
10–12	4.5	5.0	8.0	4.0	5.0	5.5	4.0	6.0	6.0
14–16	5.5	8.0	11.5	5.0	6.0	6.5	5.0	5.5	6.5
18–20	6.0	7.5	13.0	6.0	7.0	7.5	5.0	7.0	7.5
24	6.5	10.0	14.0	6.5	8.0	9.5	6.5	7.0	8.0

*ALLOWANCES MUST BE MADE FOR SATURATED SOILS AND SIZES ADJUSTED ACCORDINGLY.

SEWER FORCEMAIN UPWARD THRUST BLOCKING DIMENSIONS TABLE

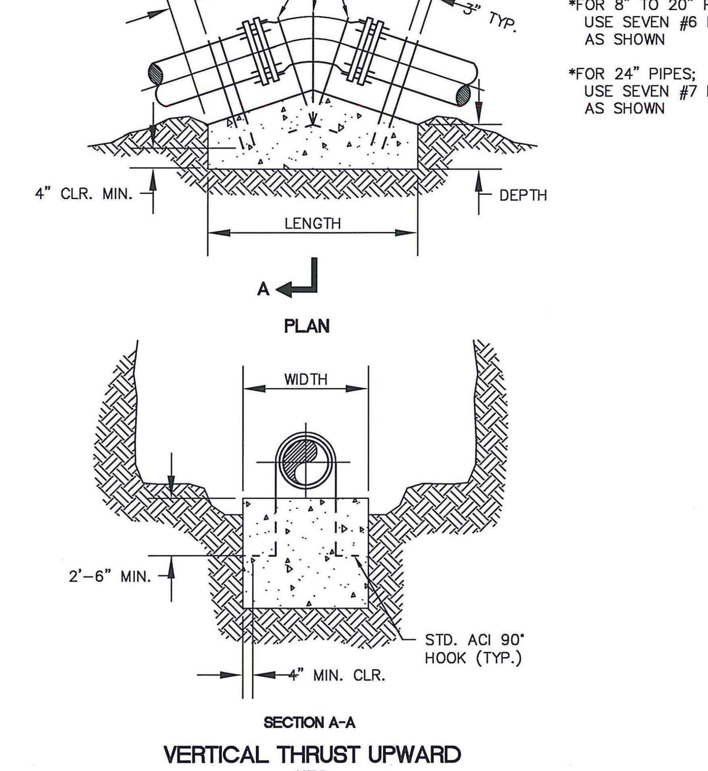

NOTES :

1. ALL CONCRETE SHALL HAVE A MINIMUM COMPRESSIVE STRENGTH OF 2,500 PSI AT THE END OF 28 DAYS
2. REINFORCING STEEL SHALL BE ASTM A-615, GRADE 60, EPOXY COATED DEFORMED BARS
3. REINFORCING BARS ARE "U" SHAPED AROUND PIPE

SEWER FORCEMAIN THRUST BLOCKING - VERTICAL

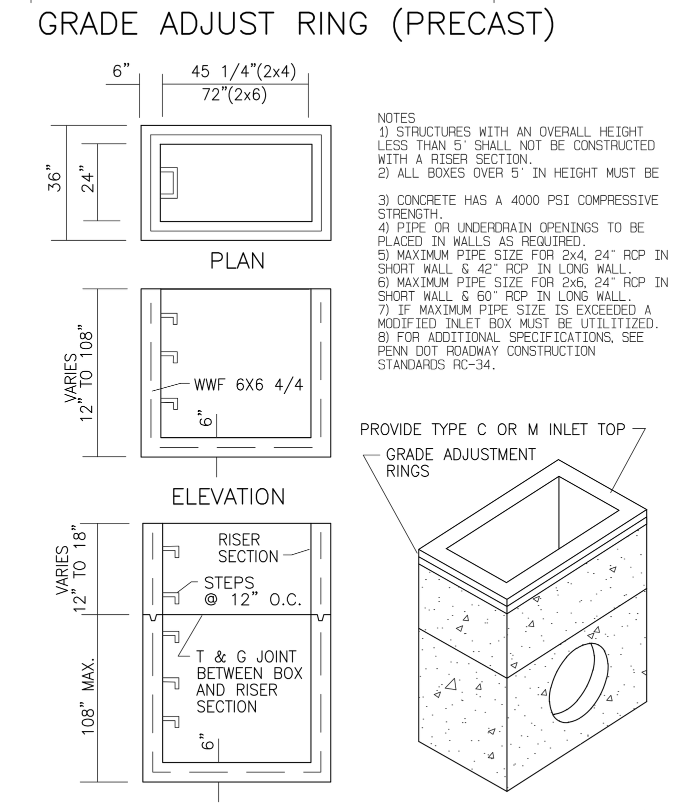

2x4 OR 2x6 PRECAST INLET BOX

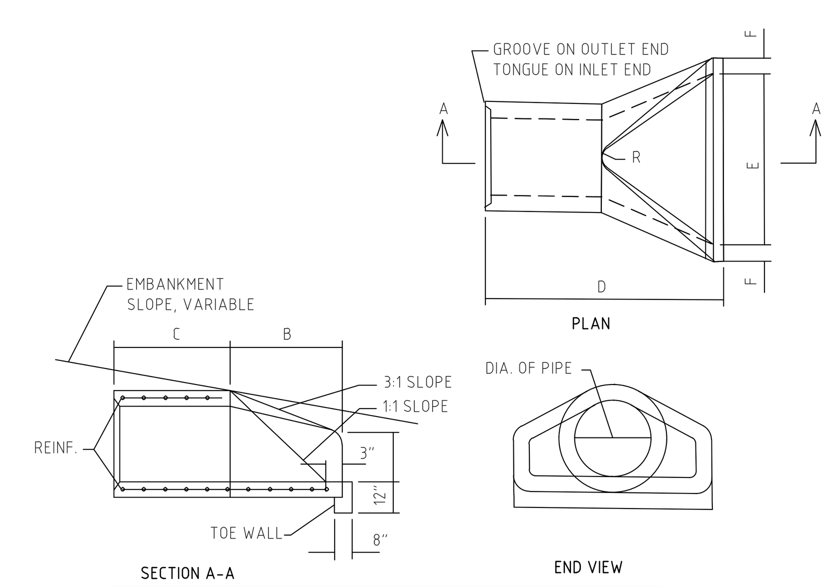

DIMENSIONS FOR END SECTION CONCRETE PIPE							
DIA.	A	B	C	D	E	F	R
15"	7"	2'-2 1/2"	3'-11"	6'-1 1/2"	2'-6"	2 1/4"	7 1/2"
18"	9"	2'-3"	3'-10"	6'-1"	3'-0"	2 1/2"	7 1/2"
21"	9"	3'-0"	3'-1"	6'-1"	3'-6"	2 3/4"	8"
24"	9 1/2"	3'-7 1/2"	2'-6"	6'-1 1/2"	4'-0"	3"	8"

CONCRETE END SECTION

Revision	Date	Description	Rev.By
4	2/5/20	REVISED PER TOWNSHIP COMMENTS	MDH
3	12/20/19	REVISED PER TOWNSHIP COMMENTS	MDH
2	10/23/19	REVISED PER TOWNSHIP COMMENTS	MDH
1	7/24/19	REVISED PER TOWNSHIP COMMENTS	MDH

THIS DOCUMENT AND ALL INFORMATION AND WORK PRODUCT REPRESENTED BY AND CONTAINED HEREIN, IS THE SOLE AND EXCLUSIVE PROPERTY OF DH ENTERPRISES, INC. THE INFORMATION CONTAINED HEREIN IS LICENSED ONLY FOR LIMITED USE BY THE INTENDED RECIPIENT, AND NO LICENSE, PERMISSION OR AUTHORITY IS EXTENDED DIRECTLY OR IMPLIED, TO ANY PARTY WITHOUT THE EXPRESS WRITTEN PERMISSION OF DH ENTERPRISES, INC. COPYRIGHT, 2019, DH ENTERPRISES. ALL RIGHTS RESERVED

2815 PENN AVENUE
WEST LAWN, PA
610-927-4242

Enterprises
a civil engineering design & management firm

SEAL:

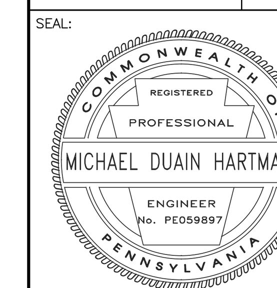

"TROUTBECK FARMS"
PRELIMINARY PLAN
SITE CONSTRUCTION DETAILS

CLIENT: MOSER CONSTRUCTION MANAGEMENT, LLC.
LOCATION: WILLISTOWN TOWNSHIP, CHESTER COUNTY, PENNSYLVANIA
DATE: JUNE 1, 2018

DRAWN BY: M.D.HARTMAN
PROJ.MANAGER: M.D.HARTMAN
SCALE: ---
SHEET: 25 of 25
PLAN NO. 17032-P-D-9.0

ORSATTI & STUART ASSOCIATES, INC.
PLANNERS & LANDSCAPE ARCHITECTS
900 First Avenue • Suite 9B • King of Prussia • PA • 19406
PHONE 267 2100 • FAX 267 2600 • www.orsattistuartassociates.com

860 FIRST AVENUE
SUITE 9B
KING OF PRUSSIA, PA 19406
TEL. 610.337.2100
ORSATTIASSOCIATES.COM

SEAL

PENNSYLVANIA
PATRICK J. STUART
REGISTERED LANDSCAPE ARCHITECT

LICENSE #: LA003025

TEAM

LANDSCAPE ARCHITECT
ORSATTI + STUART ASSOCIATES
860 FIRST AVENUE, SUITE 9B
KING OF PRUSSIA, PA 19406
TEL. 610.337.2100

CIVIL ENGINEER
dH ENTERPRISES
2815 PENN AVENUE
WEST LAWN, PA 19609
TEL. 610.927.4242

PROJECT NAME

TROUTBECK FARM SUBDIVISION

WILLISTOWN TOWNSHIP
CHESTER COUNTY
PENNSYLVANIA

CLIENT

MOSER CONSTRUCTION MGMT, LLC.
1171 LANCASTER AVENUE, SUITE 201
BERWYN, PA 19312
TEL. 610.725.0812

REVISIONS

NO.	DATE	NOTES
1	12/20/2019	REVISIONS PER TOWNSHIP REVIEW LETTER DATED 11/18/19
2	2/5/2020	REVISIONS PER TOWNSHIP REVIEW LETTER DATED 1/29/20

DRAWN BY	KTD
CHECKED BY	PJS
SCALE	1" = 80'
DATE	10.21.2019

DRAWING NAME

PRELIMINARY / FINAL

LANDSCAPE PLAN

DRAWING NUMBER
SHEET NUMBER

LP - 1

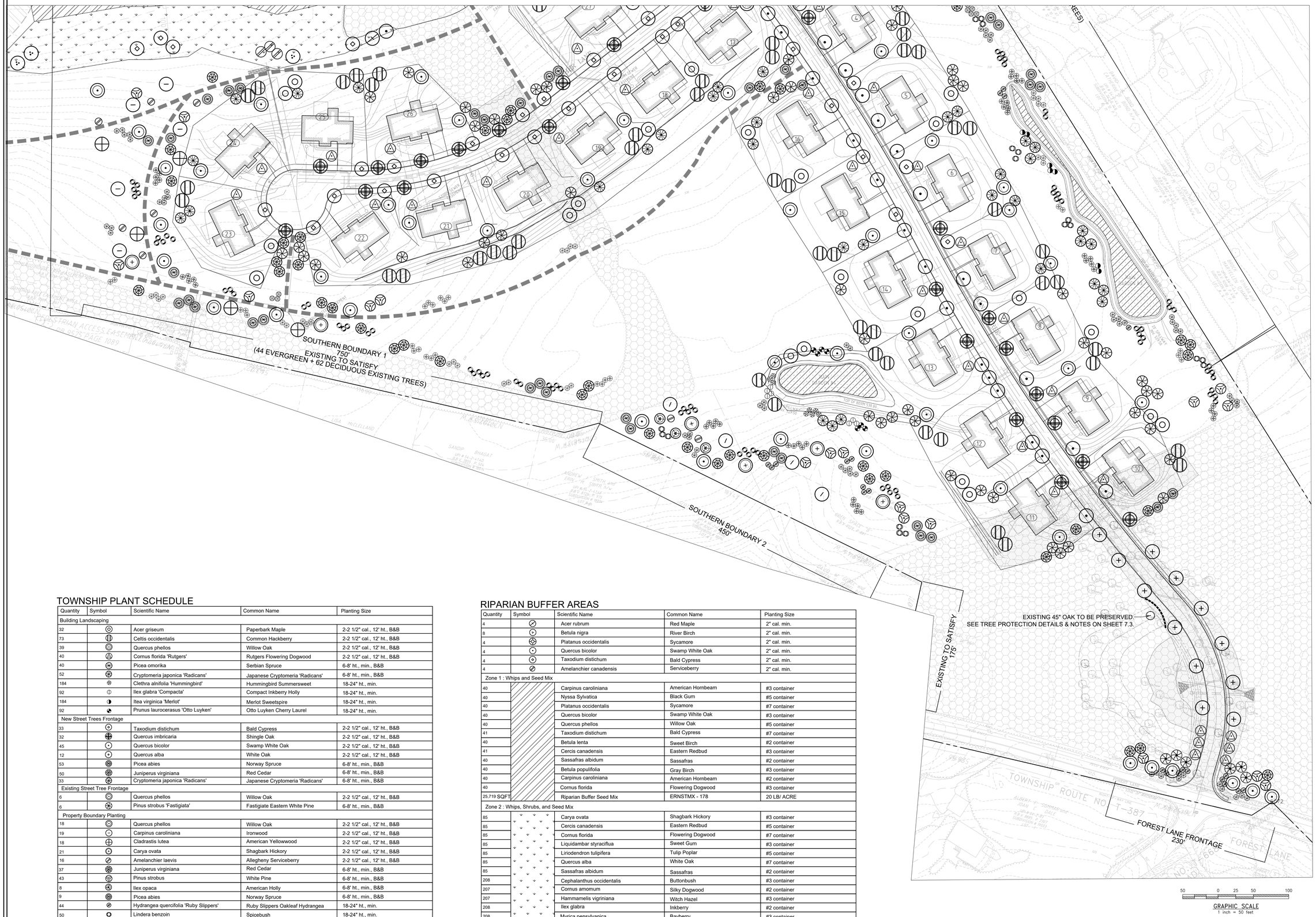

TOWNSHIP PLANT SCHEDULE

Quantity	Symbol	Scientific Name	Common Name	Planting Size
Building Landscaping				
32		Acer griseum	Paperbark Maple	2-2 1/2" cal., 12' ht., B&B
73		Celtis occidentalis	Common Hackberry	2-2 1/2" cal., 12' ht., B&B
39		Quercus phellos	Willow Oak	2-2 1/2" cal., 12' ht., B&B
40		Cornus florida 'Rutgers'	Rutgers Flowering Dogwood	2-2 1/2" cal., 12' ht., B&B
40		Picea omorika	Serbian Spruce	6-8' ht., min., B&B
52		Cryptomeria japonica 'Radicans'	Japanese Cryptomeria 'Radicans'	6-8' ht., min., B&B
184		Clethra alnifolia 'Hummingbird'	Hummingbird Summersweet	18-24" ht., min.
92		Ilex glabra 'Compacta'	Compact Inkberry Holly	18-24" ht., min.
184		Itea virginica 'Merlot'	Merlot Sweetspire	18-24" ht., min.
92		Prunus laurocerasus 'Otto Luyken'	Otto Luyken Cherry Laurel	18-24" ht., min.
New Street Trees Frontage				
33		Taxodium distichum	Bald Cypress	2-2 1/2" cal., 12' ht., B&B
32		Quercus imbricaria	Shingle Oak	2-2 1/2" cal., 12' ht., B&B
45		Quercus bicolor	Swamp White Oak	2-2 1/2" cal., 12' ht., B&B
12		Quercus alba	White Oak	2-2 1/2" cal., 12' ht., B&B
53		Picea abies	Norway Spruce	6-8' ht., min., B&B
50		Juniperus virginiana	Red Cedar	6-8' ht., min., B&B
33		Cryptomeria japonica 'Radicans'	Japanese Cryptomeria 'Radicans'	6-8' ht., min., B&B
Existing Street Tree Frontage				
6		Quercus phellos	Willow Oak	2-2 1/2" cal., 12' ht., B&B
6		Pinus strobus 'Fastigiata'	Fastigiate Eastern White Pine	6-8' ht., min., B&B
Property Boundary Planting				
18		Quercus phellos	Willow Oak	2-2 1/2" cal., 12' ht., B&B
19		Carpinus caroliniana	Ironwood	2-2 1/2" cal., 12' ht., B&B
18		Cladrastis lutea	American Yellowwood	2-2 1/2" cal., 12' ht., B&B
21		Carya ovata	Shagbark Hickory	2-2 1/2" cal., 12' ht., B&B
16		Amelanchier laevis	Allegheny Serviceberry	2-2 1/2" cal., 12' ht., B&B
37		Juniperus virginiana	Red Cedar	6-8' ht., min., B&B
43		Pinus strobus	White Pine	6-8' ht., min., B&B
8		Ilex opaca	American Holly	6-8' ht., min., B&B
9		Picea abies	Norway Spruce	6-8' ht., min., B&B
44		Hydrangea quercifolia 'Ruby Slippers'	Ruby Slippers Oakleaf Hydrangea	18-24" ht., min.
50		Lindera benzoin	Spicebush	18-24" ht., min.
35		Viburnum dentatum	Arrowwood viburnum	18-24" ht., min.
177		Ilex glabra	Inkberry	18-24" ht., min.
171		Myrica pensylvanica	Bayberry	18-24" ht., min.
181		Viburnum 'Pragense'	Prague Viburnum	18-24" ht., min.
Stormwater Management				
26,383SQFT		Basin Bottom Seed Mix	Ernst Seed Mix - 126	20LB/ ACRE
22,453SQFT		Rain Garden Seed Mix	Ernst Seed Mix - 180	20LB/ ACRE

RIPARIAN BUFFER AREAS

Quantity	Symbol	Scientific Name	Common Name	Planting Size
4		Acer rubrum	Red Maple	2" cal. min.
8		Betula nigra	River Birch	2" cal. min.
4		Platanus occidentalis	Sycamore	2" cal. min.
4		Quercus bicolor	Swamp White Oak	2" cal. min.
4		Taxodium distichum	Bald Cypress	2" cal. min.
4		Amelanchier canadensis	Serviceberry	2" cal. min.
Zone 1 : Whips and Seed Mix				
40		Carpinus caroliniana	American Hornbeam	#3 container
40		Nyssa Sylvatica	Black Gum	#5 container
40		Platanus occidentalis	Sycamore	#7 container
40		Quercus bicolor	Swamp White Oak	#3 container
40		Quercus phellos	Willow Oak	#5 container
41		Taxodium distichum	Bald Cypress	#7 container
40		Betula lenta	Sweet Birch	#2 container
41		Cercis canadensis	Eastern Redbud	#3 container
40		Sassafras albidum	Sassafras	#2 container
40		Betula populifolia	Gray Birch	#3 container
40		Carpinus caroliniana	American Hornbeam	#2 container
40		Cornus florida	Flowering Dogwood	#3 container
25,719 SQFT		Riparian Buffer Seed Mix	ERNSTMX - 178	20 LB/ ACRE
Zone 2 : Whips, Shrubs, and Seed Mix				
85		Carya ovata	Shagbark Hickory	#3 container
85		Cercis canadensis	Eastern Redbud	#5 container
85		Cornus florida	Flowering Dogwood	#7 container
85		Liquidambar styraciflua	Sweet Gum	#3 container
85		Liriodendron tulipifera	Tulip Poplar	#5 container
85		Quercus alba	White Oak	#7 container
85		Sassafras albidum	Sassafras	#2 container
208		Cephalanthus occidentalis	Buttonbush	#3 container
207		Cornus amomum	Silky Dogwood	#2 container
207		Hammamelis vigriniana	Witch Hazel	#3 container
208		Ilex glabra	Inkberry	#2 container
208		Myrica pensylvanica	Bayberry	#3 container
86,862 SQFT		Riparian Buffer Seed Mix	ERNSTMX - 178	20 LB/ ACRE

ORSATTI & STUART ASSOCIATES, INC.
PLANNERS & LANDSCAPE ARCHITECTS
900 First Avenue • Suite 9B • King of Prussia • PA • 19406
PHONE 267 2100 • FAX 267 2600 • www.orsattistuartassociates.com

860 FIRST AVENUE
SUITE 9B
KING OF PRUSSIA, PA 19406
TEL. 610.337.2100
ORSATTIASSOCIATES.COM

SEAL

PENNSYLVANIA
PATRICK J. STUART
REGISTERED LANDSCAPE ARCHITECT

LICENSE #: LA003025

TEAM

LANDSCAPE ARCHITECT
ORSATTI + STUART ASSOCIATES
860 FIRST AVENUE, SUITE 9B
KING OF PRUSSIA, PA 19406
TEL. 610.337.2100

CIVIL ENGINEER
dH ENTERPRISES
2815 PENN AVENUE
WEST LAWN, PA 19609
TEL. 610.927.4242

PROJECT NAME

TROUTBECK FARM SUBDIVISION

WILLISTOWN TOWNSHIP
CHESTER COUNTY
PENNSYLVANIA

CLIENT

MOSER CONSTRUCTION MGMT, LLC.
1171 LANCASTER AVENUE, SUITE 201
BERWYN, PA 19312
TEL. 610.725.0812

REVISIONS

NO.	DATE	NOTES
1	12/20/2019	REVISIONS PER TOWNSHIP REVIEW LETTER DATED 11/18/19
2	2/5/2020	REVISIONS PER TOWNSHIP REVIEW LETTER DATED 1/20/20

DRAWN BY	KTD
CHECKED BY	PJS
SCALE	1" = 50'
DATE	10.21.2019

DRAWING NAME

PRELIMINARY / FINAL

LANDSCAPE PLAN

DRAWING NUMBER
SHEET NUMBER

LP - 2

TOWNSHIP PLANT SCHEDULE

Quantity	Symbol	Scientific Name	Common Name	Planting Size
Building Landscaping				
32		Acer griseum	Paperbark Maple	2-2 1/2" cal., 12' ht., B&B
73		Celtis occidentalis	Common Hackberry	2-2 1/2" cal., 12' ht., B&B
39		Quercus phellos	Willow Oak	2-2 1/2" cal., 12' ht., B&B
40		Cornus florida 'Rutgers'	Rutgers Flowering Dogwood	2-2 1/2" cal., 12' ht., B&B
40		Picea omorika	Serbian Spruce	6-8' ht., min., B&B
52		Cryptomeria japonica 'Radicans'	Japanese Cryptomeria 'Radicans'	6-8' ht., min., B&B
184		Clethra alnifolia 'Hummingbird'	Hummingbird Summersweet	18-24" ht., min.
92		Ilex glabra 'Compacta'	Compact Inkberry Holly	18-24" ht., min.
184		Itea virginica 'Merlot'	Merlot Sweetspire	18-24" ht., min.
92		Prunus laurocerasus 'Otto Luyken'	Otto Luyken Cherry Laurel	18-24" ht., min.
New Street Trees Frontage				
33		Taxodium distichum	Bald Cypress	2-2 1/2" cal., 12' ht., B&B
32		Quercus imbricaria	Shingle Oak	2-2 1/2" cal., 12' ht., B&B
45		Quercus bicolor	Swamp White Oak	2-2 1/2" cal., 12' ht., B&B
12		Quercus alba	White Oak	2-2 1/2" cal., 12' ht., B&B
53		Picea abies	Norway Spruce	6-8' ht., min., B&B
50		Juniperus virginiana	Red Cedar	6-8' ht., min., B&B
33		Cryptomeria japonica 'Radicans'	Japanese Cryptomeria 'Radicans'	6-8' ht., min., B&B
Existing Street Tree Frontage				
6		Quercus phellos	Willow Oak	2-2 1/2" cal., 12' ht., B&B
6		Pinus strobus 'Fastigiata'	Fastigiate Eastern White Pine	6-8' ht., min., B&B
Property Boundary Planting				
18		Quercus phellos	Willow Oak	2-2 1/2" cal., 12' ht., B&B
19		Carpinus caroliniana	Ironwood	2-2 1/2" cal., 12' ht., B&B
18		Cladrastis lutea	American Yellowwood	2-2 1/2" cal., 12' ht., B&B
21		Carya ovata	Shagbark Hickory	2-2 1/2" cal., 12' ht., B&B
16		Amelanchier laevis	Allegheny Serviceberry	2-2 1/2" cal., 12' ht., B&B
37		Juniperus virginiana	Red Cedar	6-8' ht., min., B&B
43		Pinus strobus	White Pine	6-8' ht., min., B&B
8		Ilex opaca	American Holly	6-8' ht., min., B&B
9		Picea abies	Norway Spruce	6-8' ht., min., B&B
44		Hydrangea quercifolia 'Ruby Slippers'	Ruby Slippers Oakleaf Hydrangea	18-24" ht., min.
50		Lindera benzoin	Spicebush	18-24" ht., min.
35		Viburnum dentatum	Arrowwood viburnum	18-24" ht., min.
177		Ilex glabra	Inkberry	18-24" ht., min.
171		Myrica pensylvanica	Bayberry	18-24" ht., min.
181		Viburnum 'Pragense'	Prague Viburnum	18-24" ht., min.
Stormwater Management				
26,383SQFT		Basin Bottom Seed Mix	Ernst Seed Mix - 126	20LB/ ACRE
22,453SQFT		Rain Garden Seed Mix	Ernst Seed Mix - 180	20LB/ ACRE

RIPARIAN BUFFER AREAS

Quantity	Symbol	Scientific Name	Common Name	Planting Size
4		Acer rubrum	Red Maple	2" cal. min.
8		Betula nigra	River Birch	2" cal. min.
4		Platanus occidentalis	Sycamore	2" cal. min.
4		Quercus bicolor	Swamp White Oak	2" cal. min.
4		Taxodium distichum	Bald Cypress	2" cal. min.
4		Amelanchier canadensis	Serviceberry	2" cal. min.
Zone 1 : Whips and Seed Mix				
40		Carpinus caroliniana	American Hornbeam	#3 container
40		Nyssa Sylvatica	Black Gum	#5 container
40		Platanus occidentalis	Sycamore	#7 container
40		Quercus bicolor	Swamp White Oak	#3 container
40		Quercus phellos	Willow Oak	#5 container
41		Taxodium distichum	Bald Cypress	#7 container
40		Betula lenta	Sweet Birch	#2 container
41		Cercis canadensis	Eastern Redbud	#3 container
40		Sassafras albidum	Sassafras	#2 container
40		Betula populifolia	Gray Birch	#3 container
40		Carpinus caroliniana	American Hornbeam	#2 container
40		Cornus florida	Flowering Dogwood	#3 container
25,719 SQFT		Riparian Buffer Seed Mix	ERNSTMX - 178	20 LB/ ACRE
Zone 2 : Whips, Shrubs, and Seed Mix				
85		Carya ovata	Shagbark Hickory	#3 container
85		Cercis canadensis	Eastern Redbud	#5 container
85		Cornus florida	Flowering Dogwood	#7 container
85		Liquidambar styraciflua	Sweet Gum	#3 container
85		Liriodendron tulipifera	Tulip Poplar	#5 container
85		Quercus alba	White Oak	#7 container
85		Sassafras albidum	Sassafras	#2 container
208		Cephalanthus occidentalis	Buttonbush	#3 container
207		Cornus amomum	Silky Dogwood	#2 container
207		Hammamelis vigriniana	Witch Hazel	#3 container
208		Ilex glabra	Inkberry	#2 container
208		Myrica pensylvanica	Bayberry	#3 container
86,862 SQFT		Riparian Buffer Seed Mix	ERNSTMX - 178	20 LB/ ACRE

50 0 25 50 100
GRAPHIC SCALE
1 inch = 50 feet

ORSATTI & STUART ASSOCIATES, INC.
PLANNERS & LANDSCAPE ARCHITECTS
860 First Avenue • Suite 9B • King of Prussia • PA • 19406
PHTN 267 2100 • FAXTN 267 2020 • www.orsattistuartassociates.com

860 FIRST AVENUE
SUITE 9B
KING OF PRUSSIA, PA 19406
TEL. 610.337.2100
ORSATTIASSOCIATES.COM

SEAL

PENNSYLVANIA
PATRICK J. STUART
LICENSED
LANDSCAPE ARCHITECT

LICENSE #: LA003025

TEAM

LANDSCAPE ARCHITECT
ORSATTI + STUART ASSOCIATES
860 FIRST AVENUE, SUITE 9B
KING OF PRUSSIA, PA 19406
TEL. 610.337.2100

CIVIL ENGINEER
dH ENTERPRISES
2815 PENN AVENUE
WEST LAWN, PA 19609
TEL. 610.927.4242

PROJECT NAME

TROUTBECK FARM SUBDIVISION

WILLISTOWN TOWNSHIP
CHESTER COUNTY
PENNSYLVANIA

CLIENT

MOSER CONSTRUCTION MGMT, LLC.
1171 LANCASTER AVENUE, SUITE 201
BERWYN, PA 19312
TEL. 610.725.0812

REVISIONS

NO.	DATE	NOTES
1	12/20/2019	REVISIONS PER TOWNSHIP REVIEW LETTER DATED 11/18/19
2	2/5/2020	REVISIONS PER TOWNSHIP REVIEW LETTER DATED 1/30/20

DRAWN BY	KTD
CHECKED BY	PJS
SCALE	1" = 50'
DATE	10.21.2019

DRAWING NAME

PRELIMINARY / FINAL

LANDSCAPE PLAN

DRAWING NUMBER
SHEET NUMBER

LP - 3

WILLISTOWN TOWNSHIP LANDSCAPE REQUIREMENTS

Chapter 73 - Environmental Protection

Section 73-52. Applicability.
A. Residential Uses.
(3) Cluster development shall comply with Items 1 through 5 of Table 1, Minimum Planting Standards.
(a) Front, side and rear perimeter planting buffers shall be 15 feet wide.

Section 73-53. Mitigation of visual impacts.
A. The applicant shall plant trees and shrubs and make other landscape improvements (e.g., berms, fences) as necessary to mitigate the adverse visual impacts which his proposed actions will have on his property, adjoining properties and the Township in general.

Section 73-54. Minimum Planting Standards.

Table 1 Minimum Planting Standards.	Required	Provided
1. Per 1,000 sf of gross building footprint area		
34 Bldgs x 2,700		
91,800 sf of gross building footprint / 1,000sf = 91.8		
2 Deciduous Trees	184	170 on Lots + 14 around Basins = 184
4 Deciduous Shrubs	368	340 on Lots + 28 around Basins = 368
1 Evergreen Tree	92	68 on Lots + 24 around Basins = 92
2 Evergreen Shrubs	184	170 on Lots + 14 around Basins = 184
[SEE BLDG PLANTING DETAIL (4) ON SHEET 2]		
2. Per 40 linear feet of new paved street frontage (private or public)		
Walnut Tree Lane		
4,480 linear feet / 40' = 112		
1 Deciduous Tree	112	SEE SECTION 73-56.D
1 Evergreen Tree	112	58
Kingfisher Lane		
1,560 linear feet / 40' = 39		
1 Deciduous Tree	39	SEE SECTION 73-56.D
1 Evergreen Tree	39	21
Friarsheel Lane		
320 linear feet / 40' = 8		
1 Deciduous Tree	8	SEE SECTION 73-56.D
1 Evergreen Tree	8	0
4. Per 40 linear feet of existing public road frontage		
230 linear feet / 40' = 5.75		
1 Deciduous Tree	6	6
1 Evergreen Tree	6	6
5. Per 100 linear feet of property boundary along adjoining residential or institutional properties		
Eastern Boundary 1		
1,300 linear feet / 100' = 13		
3 Deciduous Trees	39	40 Existing*
3 Deciduous Shrubs	39	39
3 Evergreen Trees	39	34 Existing 38 Proposed*
10 Evergreen Shrubs	130	172
Eastern Boundary 2		
330 linear feet / 100' = 3.30		
3 Deciduous Trees	10	10
3 Deciduous Shrubs	10	10
3 Evergreen Trees	10	10
10 Evergreen Shrubs	32	32
Eastern Boundary 3		
710 linear feet / 100' = 7.1		
3 Deciduous Trees	22	22
3 Deciduous Shrubs	22	22
3 Evergreen Trees	22	22
10 Evergreen Shrubs	71	71
Northern Boundary		
300 linear feet / 100' = 3		
3 Deciduous Trees	9	9
3 Deciduous Shrubs	9	9
3 Evergreen Trees	9	9
10 Evergreen Shrubs	30	30
Western Boundary		
1,220 linear feet / 100' = 12.2		
3 Deciduous Trees	37	37
3 Deciduous Shrubs	37	37
3 Evergreen Trees	37	37
10 Evergreen Shrubs	122	122
Southern Boundary 1		
750 linear feet - Existing woodland to satisfy		
Deciduous Trees	-	62 Existing *
Evergreen Trees	-	44 Existing * 14 Proposed
Evergreen Shrubs	-	62
Southern Boundary 2		
450 linear feet / 100' = 4.5		
3 Deciduous Trees	14	14
3 Deciduous Shrubs	14	14
3 Evergreen Trees	14	24
10 Evergreen Shrubs	45	45

* Existing trees along property boundary to count toward property buffer totals.

Section 73-56. Landscape Design Standards.
D. Street trees shall be spaced 40 to 50 feet apart, staggered along both sides of all streets.

	Required	Provided
Walnut Tree Lane		
4,480 linear feet / 50' = 89.6		
Deciduous Trees	90	90
Kingfisher Lane		
1,560 linear feet / 50' = 31.2		
Deciduous Trees	31	31
Friarsheel Lane		
320 linear feet / 50' = 6.4		
Deciduous Trees	6	6

WILLISTOWN TOWNSHIP LANDSCAPE REQUIREMENTS

Section 73-55. Landscaping of Stormwater Management Basins and Related Facilities.

(a) Wet meadows and basin floors shall be planted with wildflowers and nonaggressive grasses. No woody plants shall be planted within the saturated zone (phreatic line) of a stormwater management basin.

(1) Wet edges which remain wet all or most of the year shall be planted with wildflowers, grasses and shrubs.

(6) Screening and buffering shall be in conformance with the requirements of § 73-54 above. Stormwater management facilities shall be screened in a manner which complements the existing landscape and provides sufficient access for maintenance.

Section 73-55.1. Enhancement Standards for Riparian Buffer Areas.

D. Planting standards.

(1) Zone 1. A minimum of eight canopy trees having a two-inch caliper and eight understory trees between five feet and six feet in height** shall be planted per 1,000 square feet of open area. Where site conditions warrant, two shrubs may be substituted for each tree required, provided that no more than 10% of the trees required are replaced by shrubs. Planting requirements may be fully or partially waived where the applicant documents that existing vegetation substantially achieves this standard.

	Required	Provided
30,043 square feet / 1,000 sf = 30.04		
8 Canopy Trees	241	SEE
8 Understory Trees	241	BELOW **

(2) Zone 2. A minimum of six canopy trees having a two-inch caliper and 10 shrubs of two to three feet in height shall be planted per 1,000 square feet of open area. Planting requirements may be fully or partially waived where the applicant documents that existing vegetation substantially achieves this standard.

	Required	Provided
103,754 square feet / 1,000 sf = 103.75		
6 Canopy Trees	623	SEE
10 Shrubs	1,038	BELOW

** Waiver requested to provide the following:

	Required	Provided
Zone 1		
30,043 square feet / 1,000 sf = 30.04		
16 Whips	482	482
Zone 2		
103,754 square feet / 1,000 sf = 103.75		
6 Whips	623	595 28 (2 1/2" cal. canopy trees
10 Shrubs (Whips)	1,038	1,038

**APPLICANT REQUEST A WAIVER FROM SECTION 73-55.1.D. TO PERMIT THE USE OF NATIVE RESTORATION WHIP PLANTINGS IN LIEU OF 2" CALIPER TREES AND 2-3' FOOT TALL SHRUBS IN THE ZONE 1 & ZONE 2 RIPARIAN BUFFER AREAS. THE NATIVE RESTORATION WHIP PLANTINGS WILL GREATLY MINIMIZE THE EARTH DISTURBANCE WITHIN THE ZONE 1 & ZONE 2 RIPARIAN BUFFER AREAS. INSTALLING 2" CALIPER TREES WITH A LARGE ROOTBALL WOULD CAUSE DISTURBANCE AND REQUIRE MACHINES TO INSTALL THE TREES. RESTORATION WHIP PLANTINGS CAN BE INSTALLED BY HAND AND GREATLY MINIMIZE EARTH DISTURBANCE. RESTORATION WHIP PLANTINGS ALSO HAVE A MUCH HIGHER SURVIVAL RATE. THE APPLICANT HAS PROVIDED A BUFFER OF 2" CALIPER TREES ALONG THE OUTER EDGE OF THE RIPARIAN BUFFER TO DEFINE THE RIPARIAN BUFFER.

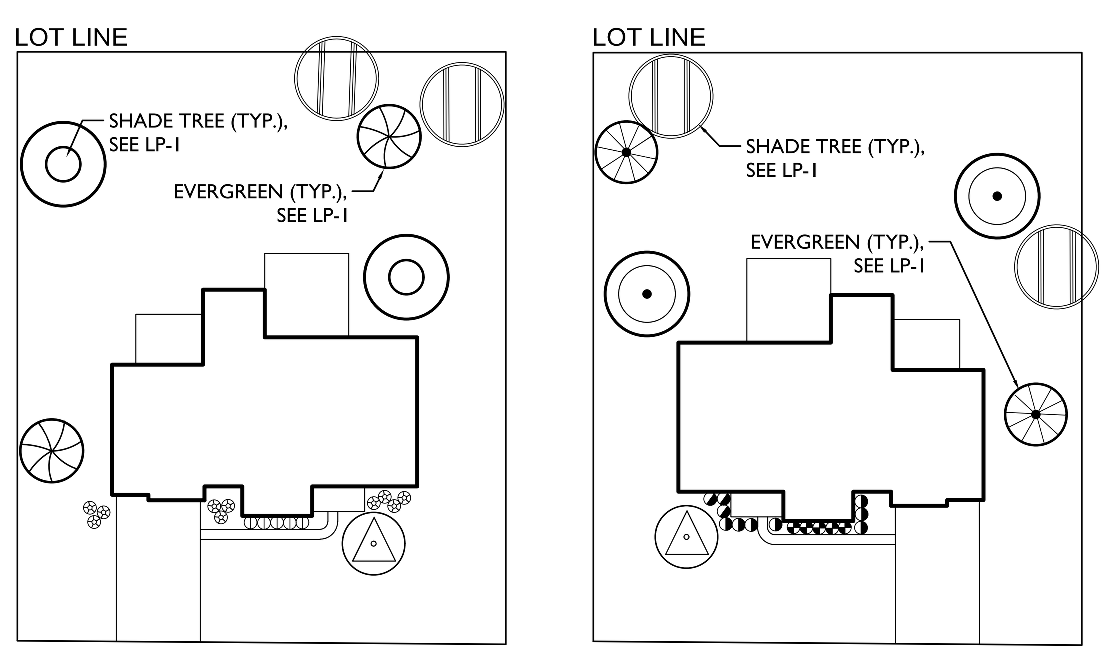

2 EVERGREEN TREES / LOT
5 DECIDUOUS TREES / LOT
5 EVERGREEN SHRUBS / LOT
10 DECIDUOUS SHRUBS / LOT

2 EVERGREEN TREES / LOT
5 DECIDUOUS TREES / LOT
5 EVERGREEN SHRUBS / LOT
10 DECIDUOUS SHRUBS / LOT

4 BUILDING AREA PLANTING
1" = 30'

30 0 15 30 60
GRAPHIC SCALE
1 inch = 30 feet

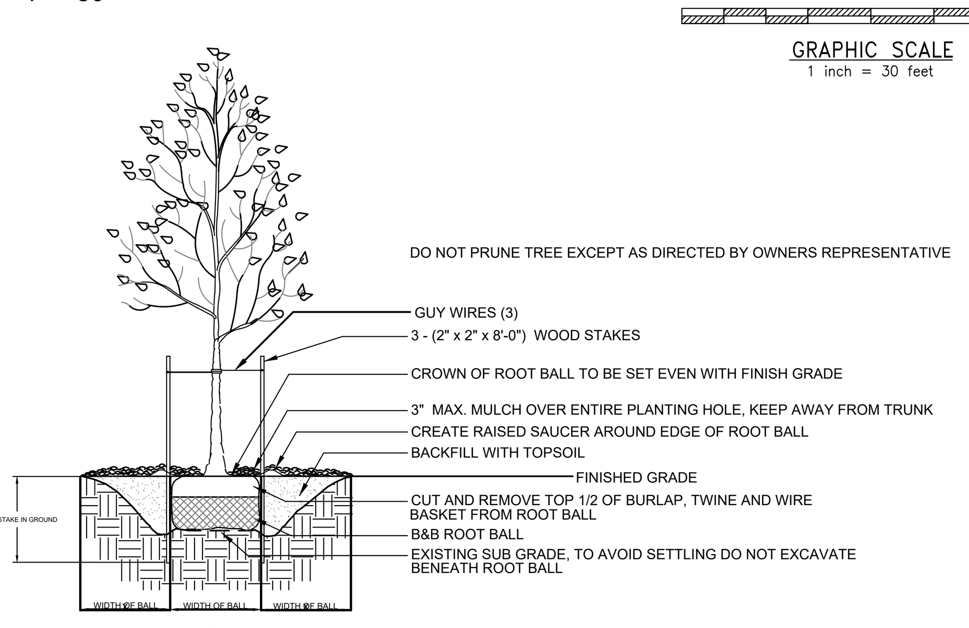

NOTES:
1. DO NOT DAMAGE MAIN ROOTS OR ROOT BALL WHEN INSTALLING TREE STAKE.
2. WATER THOROUGHLY AFTER INSTALLATION.
3. REMOVE STAKES TWO YEARS OR LESS AFTER INSTALLATION.
4. CONTRACTOR IS NOT TO USE TREE WRAP.

3 TYPICAL DECIDUOUS TREE PLANTING DETAIL
NTS

TOWNSHIP PLANT SCHEDULE

Quantity	Symbol	Scientific Name	Common Name	Planting Size
Building Landscaping				
32		Acer griseum	Paperbark Maple	2-2 1/2" cal., 12' ht., B&B
73		Celtis occidentalis	Common Hackberry	2-2 1/2" cal., 12' ht., B&B
39		Quercus phellos	Willow Oak	2-2 1/2" cal., 12' ht., B&B
40		Cornus florida 'Rutgers'	Rutgers Flowering Dogwood	2-2 1/2" cal., 12' ht., B&B
40		Picea omorika	Serbian Spruce	6-8' ht., min., B&B
52		Cryptomeria japonica 'Radicans'	Japanese Cryptomeria 'Radicans'	6-8' ht., min., B&B
184		Clethra alnifolia 'Hummingbird'	Hummingbird Summersweet	18-24" ht., min.
92		Ilex glabra 'Compacta'	Compact Inkberry Holly	18-24" ht., min.
184		Itea virginica 'Merlot'	Merlot Sweetspire	18-24" ht., min.
92		Prunus laurocerasus 'Otto Luyken'	Otto Luyken Cherry Laurel	18-24" ht., min.
New Street Trees Frontage				
33		Taxodium distichum	Bald Cypress	2-2 1/2" cal., 12' ht., B&B
32		Quercus imbricaria	Shingle Oak	2-2 1/2" cal., 12' ht., B&B
45		Quercus bicolor	Swamp White Oak	2-2 1/2" cal., 12' ht., B&B
12		Quercus alba	White Oak	2-2 1/2" cal., 12' ht., B&B
53		Picea abies	Norway Spruce	6-8' ht., min., B&B
50		Juniperus virginiana	Red Cedar	6-8' ht., min., B&B
33		Cryptomeria japonica 'Radicans'	Japanese Cryptomeria 'Radicans'	6-8' ht., min., B&B
Existing Street Tree Frontage				
6		Quercus phellos	Willow Oak	2-2 1/2" cal., 12' ht., B&B
6		Pinus strobus 'Fastigiata'	Fastigiate Eastern White Pine	6-8' ht., min., B&B
Property Boundary Planting				
18		Quercus phellos	Willow Oak	2-2 1/2" cal., 12' ht., B&B
19		Carpinus caroliniana	Ironwood	2-2 1/2" cal., 12' ht., B&B
18		Cladrastis lutea	American Yellowwood	2-2 1/2" cal., 12' ht., B&B
21		Carya ovata	Shagbark Hickory	2-2 1/2" cal., 12' ht., B&B
16		Amelanchier laevis	Allegheny Serviceberry	2-2 1/2" cal., 12' ht., B&B
37		Juniperus virginiana	Red Cedar	6-8' ht., min., B&B
43		Pinus strobus	White Pine	6-8' ht., min., B&B
8		Ilex opaca	American Holly	6-8' ht., min., B&B
9		Picea abies	Norway Spruce	6-8' ht., min., B&B
44		Hydrangea quercifolia 'Ruby Slippers'	Ruby Slippers Oakleaf Hydrangea	18-24" ht., min.
50		Lindera benzoin	Spicebush	18-24" ht., min.
35		Viburnum dentatum	Arrowwood viburnum	18-24" ht., min.
177		Ilex glabra	Inkberry	18-24" ht., min.
171		Myrica pensylvanica	Bayberry	18-24" ht., min.
181		Viburnum 'Pragense'	Prague Viburnum	18-24" ht., min.
Stormwater Management				
26,383SQFT		Basin Bottom Seed Mix	Ernst Seed Mix - 126	20LB/ ACRE
22,453SQFT		Rain Garden Seed Mix	Ernst Seed Mix - 180	20LB/ ACRE

RIPARIAN BUFFER AREAS

Quantity	Symbol	Scientific Name	Common Name	Planting Size
4		Acer rubrum	Red Maple	2" cal. min.
8		Betula nigra	River Birch	2" cal. min.
4		Platanus occidentalis	Sycamore	2" cal. min.
4		Quercus bicolor	Swamp White Oak	2" cal. min.
4		Taxodium distichum	Bald Cypress	2" cal. min.
4		Amelanchier canadensis	Serviceberry	2" cal. min.
Zone 1 : Whips and Seed Mix				
40		Carpinus caroliniana	American Hornbeam	#3 container
40		Nyssa Sylvatica	Black Gum	#5 container
40		Platanus occidentalis	Sycamore	#7 container
40		Quercus bicolor	Swamp White Oak	#3 container
40		Quercus phellos	Willow Oak	#5 container
41		Taxodium distichum	Bald Cypress	#7 container
40		Betula lenta	Sweet Birch	#2 container
41		Cercis canadensis	Eastern Redbud	#3 container
40		Sassafras albidum	Sassafras	#2 container
40		Betula populifolia	Gray Birch	#3 container
40		Carpinus caroliniana	American Hornbeam	#2 container
40		Cornus florida	Flowering Dogwood	#3 container
25,719 SQFT		Riparian Buffer Seed Mix	ERNSTMX - 178	20 LB/ ACRE
Zone 2 : Whips, Shrubs, and Seed Mix				
85		Carya ovata	Shagbark Hickory	#3 container
85		Cercis canadensis	Eastern Redbud	#5 container
85		Cornus florida	Flowering Dogwood	#7 container
85		Liquidambar styraciflua	Sweet Gum	#3 container
85		Liriodendron tulipifera	Tulip Poplar	#5 container
85		Quercus alba	White Oak	#7 container
85		Sassafras albidum	Sassafras	#2 container
208		Cephalanthus occidentalis	Buttonbush	#3 container
207		Cornus amomum	Silky Dogwood	#2 container
207		Hammamelis vigriniana	Witch Hazel	#3 container
208		Ilex glabra	Inkberry	#2 container
208		Myrica pensylvanica	Bayberry	#3 container
86,862 SQFT		Riparian Buffer Seed Mix	ERNSTMX - 178	20 LB/ ACRE

NOTE: RIPARIAN BUFFER PLANTING SHALL BE SOURCED FROM OCTORERO NATIVE PLANT NURSERY IN KIRKWOOD, PA OR ANOTHER LOCAL NURSERY.

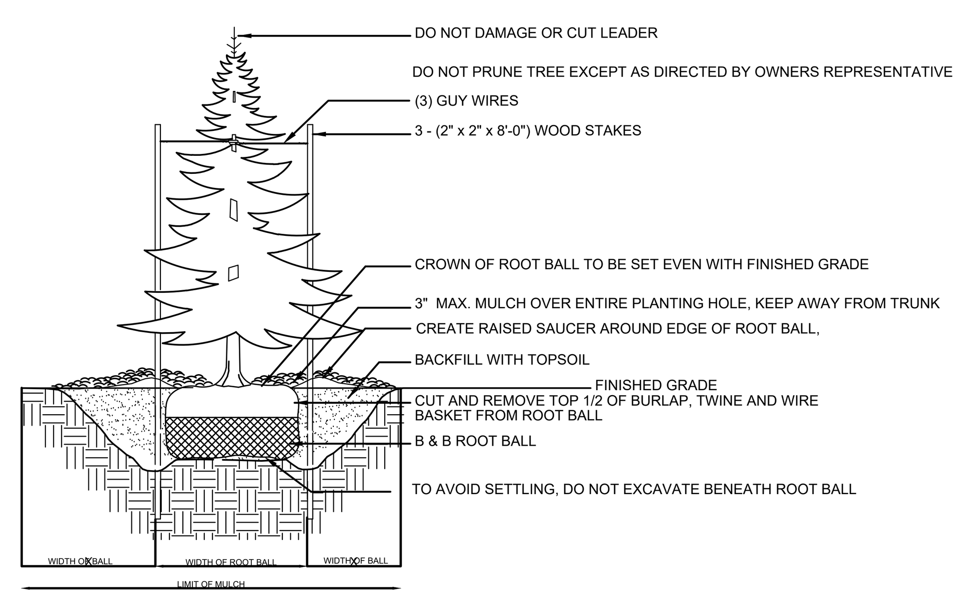

SPECIFICATIONS:
1. DO NOT DAMAGE MAIN ROOTS OR DESTROY ROOT BALL WHEN INSTALLING TREE STAKE.
2. WATER THOROUGHLY AFTER INSTALLATION.
3. REMOVE STAKES TWO YEARS OR LESS AFTER INSTALLATION.

2 TYPICAL EVERGREEN TREE PLANTING DETAIL
NTS

GENERAL NOTES:

1. Contractor shall be responsible for contacting PA ONE CALL and locating all underground utilities before any digging or plant removal occurs.
2. Contractor shall be responsible for removing existing trees and plant material within the area of proposed improvements.
3. Contractor shall be responsible for disposing of all debris off-site; clean-up of all paved areas (roadways, sidewalks, etc.); and restoration of all disturbed lawn areas.
4. Contractor shall be required to repair any damage to underground utilities damaged.
5. Contractor shall install silt fence in any areas where soil may runoff into parking areas or into existing inlets.
6. All plant material shall be of specimen quality.
7. All plant material shall conform with the most current version of the "American Standard for Nursery Stock".
8. Contractor shall provide Landscape Architect with nursery source of all plant material. Landscape Architect shall perform a site visit to inspect nursery source prior to delivery of any plant material.
9. All trees and shrubs delivered to the site shall be inspected and approved by the Landscape Architect prior to planting. All trees and shrubs shall have waterproof tag bearing legible designation of botanical and common name.
10. All plant substitutions must be approved by the East Marlborough Township Landscape Architect.
11. Any plant material exhibiting signs of disease, insects, eggs, larvae and defects such as knots, sun-scald, injuries, abrasions or disfigurement shall be rejected.
12. All plant material shall be laid out in field by Landscape Architect. (Note: No shrubs shall be planted until all tree planting is completed.)
13. All proposed shrubs shall be planted in continuous mulched beds, consisting of 3" of Oak bark mulch.
14. All trees shall be provided with a 3" deep saucer, consisting of shredded Oak bark mulch.
15. All plant material shall be thoroughly watered during installation.
16. All plant material shall be watered by Contractor at least three (3) times in absence of natural rainfall.
17. Following completion of all planting installation work, the Contractor shall be required to restore all disturbed lawn areas.
18. Following the completion, the existing vegetation will be inspected for health and quality, and if not deemed in good condition, replaced with the original required buffer plantings.
19. All plant material shall be guaranteed for 18 months.
20. At the completion of construction, the existing vegetation that is credited towards the required buffer planting requirement, will be inspected for health, quality and quantity. If the buffer areas do not contain the required quantity of trees for the buffer yard compliance after all trees have been inspected and deemed in good condition, additional plantings will be installed to meet the buffer requirements.
21. Developer reserves the right to select final products based on availability of current selected products, given these items will not be ordered and installed for 12 months after site development commences.

NOTE: SEE dH ENTERPRISES PLAN SHEET 7.3 FOR TREE PROTECTION AND VERTICAL MULCHING DETAILS

NOTE: CLIENT DID NOT RETAIN ORSATTI & STUART, INC. TO PROVIDE LONG TERM MAINTENANCE SPECIFICATIONS FOR THE LANDSCAPE MATERIAL.

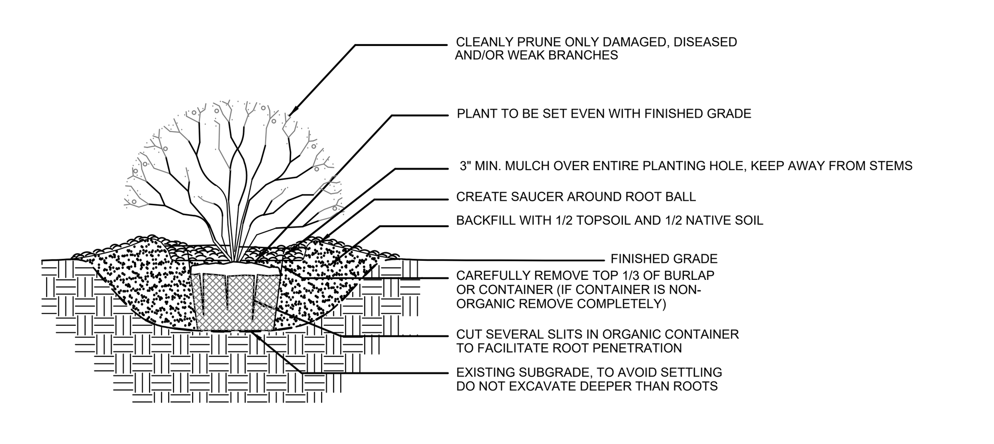

NOTES:
1. WATER THOROUGHLY AFTER INSTALLATION.
2. FOR PLANTING BED INSTALLATION EXCAVATE ENTIRE SHRUB BED AS SHOWN ON PROJECT DRAWINGS.

1 TYPICAL SHRUB PLANTING DETAIL
NTS

ORSATTI & STUART ASSOCIATES, INC.
PLANNERS ■ LANDSCAPE ARCHITECTS
860 First Avenue • Suite 9B • King of Prussia • PA • 19406
P:610 337 2100 • F:610 337 3639 • www.orsattiassociates.com

860 FIRST AVENUE
SUITE 9B
KING OF PRUSSIA, PA 19406
TEL. 610.337.2100
ORSATTIASSOCIATES.COM

SEAL
PENNSYLVANIA REGISTERED LANDSCAPE ARCHITECT
PATRICK J. STUART
LA003025

LICENSE #: LA003025

TEAM

LANDSCAPE ARCHITECT
ORSATTI + STUART ASSOCIATES
860 FIRST AVENUE, SUITE 9B
KING OF PRUSSIA, PA 19406
TEL. 610.337.2100

CIVIL ENGINEER
dH ENTERPRISES
2815 PENN AVENUE
WEST LAWN, PA 19609
TEL. 610.927.4242

PROJECT NAME

TROUTBECK FARM SUBDIVISION

WILLISTOWN TOWNSHIP
CHESTER COUNTY
PENNSYLVANIA

CLIENT

MOSER CONSTRUCTION MGMT, LLC.
1171 LANCASTER AVENUE, SUITE 201
BERWYN, PA 19312
TEL. 610.725.0812

REVISIONS

NO.	DATE	NOTES
1	12/20/2019	REVISIONS PER TOWNSHIP REVIEW LETTER DATED 11/18/19
2	2/5/2020	REVISIONS PER TOWNSHIP REVIEW LETTER DATED 1/20/20

DRAWN BY	KTD
CHECKED BY	PJS
SCALE	VARIES
DATE	10.21.2019

DRAWING NAME

PRELIMINARY / FINAL
DETAILS + NOTES

DRAWING NUMBER LP - 4
SHEET NUMBER

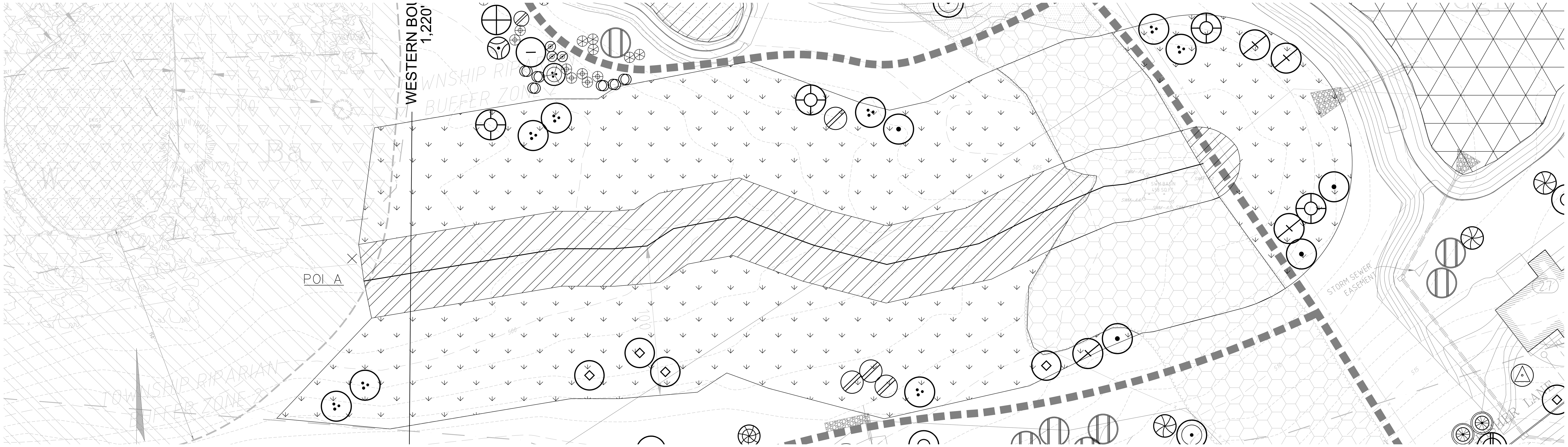

30 0 15 30 60
GRAPHIC SCALE
1 inch = 30 feet

RIPARIAN BUFFER AREAS

Quantity	Symbol	Scientific Name	Common Name	Planting Size
4		Acer rubrum	Red Maple	2" cal. min.
8		Betula nigra	River Birch	2" cal. min.
4		Platanus occidentalis	Sycamore	2" cal. min.
4		Quercus bicolor	Swamp White Oak	2" cal. min.
4		Taxodium distichum	Bald Cypress	2" cal. min.
4		Amelanchier canadensis	Serviceberry	2" cal. min.
Zone 1 : Whips and Seed Mix				
40		Carpinus caroliniana	American Hornbeam	#3 container
40		Nyssa Sylvatica	Black Gum	#5 container
40		Platanus occidentalis	Sycamore	#7 container
40		Quercus bicolor	Swamp White Oak	#3 container
40		Quercus phellos	Willow Oak	#5 container
41		Taxodium distichum	Bald Cypress	#7 container
40		Betula lenta	Sweet Birch	#2 container
41		Cercis canadensis	Eastern Redbud	#3 container
40		Sassafras albidum	Sassafras	#2 container
40		Betula populifolia	Gray Birch	#3 container
40		Carpinus caroliniana	American Hornbeam	#2 container
40		Cornus florida	Flowering Dogwood	#3 container
25,719 SQFT		Riparian Buffer Seed Mix	ERNSTMX - 178	20 LB/ ACRE
Zone 2 : Whips, Shrubs, and Seed Mix				
85		Carya ovata	Shagbark Hickory	#3 container
85		Cercis canadensis	Eastern Redbud	#5 container
85		Cornus florida	Flowering Dogwood	#7 container
85		Liquidambar styraciflua	Sweet Gum	#3 container
85		Liriodendron tulipifera	Tulip Poplar	#5 container
85		Quercus alba	White Oak	#7 container
85		Sassafras albidum	Sassafras	#2 container
208		Cephalanthus occidentalis	Buttonbush	#3 container
207		Cornus amomum	Silky Dogwood	#2 container
207		Hammamelis vigriniana	Witch Hazel	#3 container
208		Ilex glabra	Inkberry	#2 container
208		Myrica pensylvanica	Bayberry	#3 container
86,862 SQFT		Riparian Buffer Seed Mix	ERNSTMX - 178	20 LB/ ACRE

**APPLICANT REQUEST A WAIVER FROM SECTION 73-55.1.D. TO PERMIT THE USE OF NATIVE RESTORATION WHIP PLANTINGS IN LIEU OF 2" CALIPER TREES AND 2-3' FOOT TALL SHRUBS IN THE ZONE 1 & ZONE 2 RIPARIAN BUFFER AREAS. THE NATIVE RESTORATION WHIP PLANTINGS WILL GREATLY MINIMIZE THE EARTH DISTURBANCE WITHIN THE ZONE 1 & ZONE 2 RIPARIAN BUFFER AREAS. INSTALLING 2" CALIPER TREES WITH A LARGE ROOTBALL WOULD CAUSE DISTURBANCE AND REQUIRE MACHINES TO INSTALL THE TREES. RESTORATION WHIP PLANTINGS CAN BE INSTALLED BY HAND AND GREATLY MINIMIZE EARTH DISTURBANCE. RESTORATION WHIP PLANTINGS ALSO HAVE A MUCH HIGHER SURVIVAL RATE. THE APPLICANT HAS PROVIDED A BUFFER OF 2" CALIPER TREES ALONG THE OUTER EDGE OF THE RIPARIAN BUFFER TO DEFINE THE RIPARIAN BUFFER.

SEEDING SPECIFICATIONS:

1. Seeding shall ONLY occur between March 1 and May 15 OR between August 15th and October 15th.
2. Seeding shall ONLY be done in non-compacted, screened topsoil
3. Seed may be applied by Broadcast Seeding. Hydroseeding can be used with owner approval.
4. Seed shall be applied at the following rates, where specified.
5. Where slopes exceed 25% Matting and/or Blankets, or approved alternate, shall be used as a slope stabilization measure. In addition for steep slopes shall be increased to include 3lbs/1,000 sf. of annual ryegrass for rapid vegetation establishment.
6. All seed shall be permanently or temporarily stabilized until a 70% perennial cover is achieved.
7. Once seed has been applied all vehicular traffic or sources of soil compaction shall cease.
8. All new seeded areas shall be irrigated a minimum of twice a day, in the absence of natural rainfall, until seed is established at 75% coverage.

PERMANENT SEEDING

NAME	DESCRIPTION	APPLICATION RATE *Per Acre)*
1) SEED MIXTURE % BY WEIGHT	25% Creeping Red Fescue 25% Annual Ryegrass 25% Perennial Ryegrass 'Amazing A+' 25% Perennial Ryegrass 'Blackcat II'	100 lbs
2) SEED STABILIZER	Loose Straw	3 Tons
3) SOIL STABILIZER	Matting/Blankets	20 lbs

TEMPORARY

1) SEED	Annual Ryegrass	40 lbs
2) MULCH	Loose Straw	3 Tons

RIPARIAN BUFFER SEED MIX- ERNMX 178

% Common Name
30.0% Panicum clandestinum, 'Tioga' (Deertongue, 'Tioga')
16.0% Sorghastrum nutans, PA Ecotype (Indiangrass, PA Ecotype)
15.0% Elymus riparius, PA Ecotype (Riverbank Wildrye, PA Ecotype)
10.0% Andropogon gerardii, 'Niagara' (Big Bluestem, 'Niagara')
7.0% Panicum virgatum, 'Carthage', NC Ecotype (Switchgrass, 'Carthage', NC Ecotype)
3.0% Chamaecrista fasciculata, PA Ecotype (Partridge Pea, PA Ecotype)
3.0% Rudbeckia hirta, Coastal Plain NC Ecotype (Blackeyed Susan, Coastal Plain NC Ecotype)
3.0% Verbena hastata, PA Ecotype (Blue Vervain, PA Ecotype)
2.0% Asclepias incarnata, PA Ecotype (Swamp Milkweed, PA Ecotype)
2.0% Heliopsis helianthoides, PA Ecotype (Oxeye Sunflower, PA Ecotype)
2.0% Juncus effusus (Soft Rush)
2.0% Juncus tenuis, PA Ecotype (Path Rush, PA Ecotype)
1.5% Aster puniceus, PA Ecotype (Purplestem Aster, PA Ecotype)
1.0% Eupatorium perfoliatum, PA Ecotype (Boneset, PA Ecotype)
0.8% Vernonia noveboracensis, PA Ecotype (New York Ironweed, PA Ecotype)
0.5% Aster umbellatus, PA Ecotype (Flat Topped White Aster, PA Ecotype)
0.5% Eupatorium fistulosum, PA Ecotype (Joe Pye Weed, PA Ecotype)
0.5% Monarda fistulosa, Fort Indiantown Gap-PA Ecotype (Wild Bergamot, Fort Indiantown Gap-PA Ecotype)
0.2% Pycnanthemum tenuifolium (Narrowleaf Mountainmint)
Total: 100%

Notes:
1. Seeding Rate: 20 lb per acre with a cover crop at 30 lb per acre (dry sites - grain oats, Jan 1-Aug 1; or, grain rye, Aug 1-Jan 1; moist sites - grain rye year-round)
2. Seed mix can be purchased from Ernst Conservation Seeds, Meadville PA 16335, 1 (800) 873-3321
3. Hand seeding is recommended and should take place between April 1st and May 15th or between September 1st and October 15th.
4. Immediately prior to seeding the soil is to be prepared so as to be free of large clods, evenly smooth, and level. A shallow tilling to a depth of 2 inches is acceptable to break up soils in which the surface has become crusted.
5. Planting areas shall be soaked to maintain a consistent level of moisture for at least four (4) to six (6) weeks after seeding.
6. After hand seeding, each area is to be rolled to push the seeds into firm contact with the soil and firm the seedbed. A firm seedbed is critical to proper seedling growth. Do not roll the site when the soil is wet. Wait until the soil is drier to avoid compaction. Alternatively a cultipaker could be used to ensure soil to seed contact. If seeding in the fall, this step is not required as the cumulative effect of rain and snow with numerous freeze/thaw cycles will provide the necessary soil to seed contact.
7. The seeding is to be mulched with North American Green S-150 BN (biodegradable erosion blanket) and secured with Bio-stakes (biodegradable anchors).

RIPARIAN BUFFER REFORESTATION AREA MANAGEMENT NOTES:

1. Existing concrete pads and invasive species (other than Phragmites) shall be removed from the reforestation areas. A qualified professional shall be contracted to perform the invasive species removal.

2.The large stands of Phragmites are to be controlled through mowing. Annual mowing shall be provided along roads and sidewalks where they abut areas of Phragmites to limit the spread of this invasive species.

3. Existing healthy trees shall remain and be de-vined. All vines shall be cut cut at ground level and at least 10 feet above ground; the stump should be then treated with Rodeo, or an approved herbicide.

4. Following removal of all invasive species, the proposed native whip plantings can be installed at the spacing depicted on the Landscape Plan. The proposed species shall be evenly distributed throughout the reforestation areas.

5. Within the delineated Riparian Buffer Zone(s), all areas not occupied by Phragmites, or are delineated as wetland(s), are to be planted with the Ernst Riparian Buffer Seed mix, ERNMX-178. See Seeding Specifications.

6. Spray a 3' foot diameter circle around the planting locations. The proposed planting area is to be sprayed with Rodeo by a "qualified professional" according to manufacturers directions two weeks prior to installation and twice a year for 5 years to continually maintain bare earth around the tree to protect against voles.

7. New plantings are to be planted at approximately 12 feet on center to facilitate mowing or other maintenance activities.

8. All new plantings are to be watered every week during the first few summer months.

9. All new plantings are to be provided with a Tubex® standard Tree-shelter attached to an oak stake (See detail on Landscape Plan).

10. All new plantings shall be inspected annually for the first three (3) years to ensure Tree Shelter is upright and attached to oak stakes.

11. The Reforestation Areas shall be mowed twice a year for the first 5 (5) years; once in early spring (between February 15 and March 15), with a second mid-summer mowing (between July 15 and August 1) only as necessary for control of invasive plants.

12. The vegetation shall be controlled around the base of the Tree Shelter for three (3) years.

13. The Tree Shelters shall be removed after the trees reach 2-2.5" caliper. After the tree shelter is removed a 'Black Leonard Plastic Mesh Tree Gaurd', or approved substitute, should be used until the tree reaches 5" caliper. Zip ties are NOT to be used to connect mesh.

14. The Reforestation Area shall be inspected annually by a "qualified professional" to ensure invasive species due not overtake the native plantings.

15. Where there are open areas or gaps, with no restricting invasive plants, reforestation will be provided in accordance with the zoning requirements. These areas are denoted on the 'Open Space Management Plan' as "Riparian Buffer Reforestation Areas".

GENERAL NOTES:

1. Contractor shall be responsible for contacting PA ONE CALL and locating all underground utilities before any digging or plant removal occurs.
2. Contractor shall be responsible for removing existing trees and plant material within the area of proposed improvements.
3. Contractor shall be responsible for disposing of all debris off-site; clean-up of all paved areas (roadways, sidewalks, etc.); and restoration of all disturbed lawn areas.
4. Contractor shall be required to repair any damage to underground utilities damaged.
5. Contractor shall install silt fence in any areas where soil may runoff into parking areas or into existing inlets.
6. All plant material shall be of specimen quality.
7. All plant material shall conform with the most current version of the "American Standard for Nursery Stock".
8. Contractor shall provide Landscape Architect with nursery source of all plant material. Landscape Architect shall perform a site visit to inspect nursery source prior to delivery of any plant material.
9. All trees and shrubs delivered to the site shall be inspected and approved by the Landscape Architect prior to planting. All trees and shrubs shall have waterproof tag bearing legible designation of botanical and common name.
10. All plant substitutions must be approved by the East Marlborough Township Landscape Architect.
11. Any plant material exhibiting signs of disease, insects, eggs, larvae and defects such as knots, sun-scald, injuries, abrasions or disfigurement shall be rejected.
12. All plant material shall be laid out in field by Landscape Architect. (Note: No shrubs shall be planted until all tree planting is completed.)
13. All proposed shrubs shall be planted in continuous mulched beds, consisting of 3" of Oak bark mulch.
14. All trees shall be provided with a 3" deep saucer, consisting of shredded Oak bark mulch.
15. All plant material shall be thoroughly watered during installation.
16. All plant material shall be watered by Contractor at least three (3) times in absence of natural rainfall.

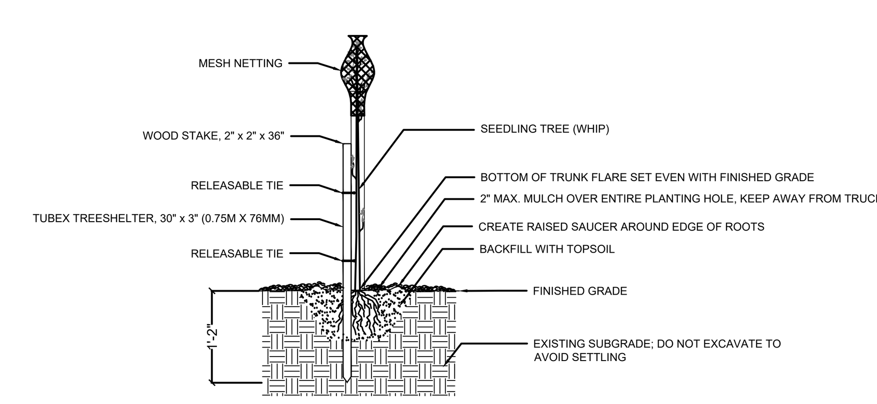

NOTES:
1. DO NOT DAMAGE MAIN ROOTS WHEN INSTALLING TREE STAKE.
2. WATER THOROUGHLY AFTER INSTALLATION.
3. REMOVE STAKES WHEN TREE REACHES 2-2.5" CALIPER.

3 TREE SEEDLING (WHIP) PLANTING DETAIL, TYP.
N.T.S.

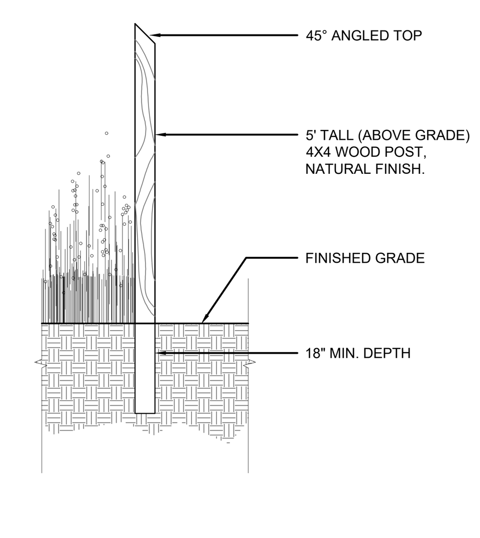

2 RIPARIAN BUFFER MARKER SECTION DETAIL, TYP.
N.T.S.

RBA (RIPARIAN BUFFER AREA) MARKER

1. TOP OF SIGN TO READ (RIPARIAN BUFFER AREA - DO NOT DISTURB)
2. MIDDLE VERTICAL COLUMNS TO READ RIPARIAN (LEFT), BUFFER AREA (RIGHT)
3. BOTTOM OF SIGN TO READ (DO NOT REMOVE)
4. COLOR OF POST TO BE BLACK OR HUNTER GREEN
5. SIGNS TO BE LOCATED AT CORNERS AND MIDDLE OF PROPERTIES WHERE APPLICABLE.
6. FOR ORDERING INFORMATION VISIT: www.berntsen.com

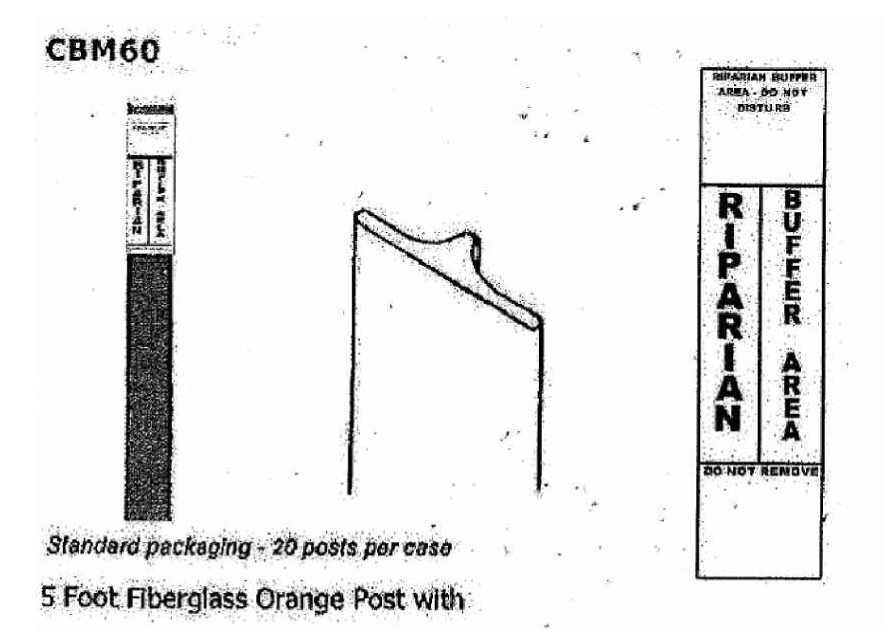

1 RIPARIAN BUFFER AREA (RBA) MARKER, TYP.
N.T.S.

ORSATTI & STUART ASSOCIATES, INC.
PLANNERS ■ LANDSCAPE ARCHITECTS

860 FIRST AVENUE
SUITE 9B
KING OF PRUSSIA, PA 19406
TEL. 610.337.2100
ORSATTIASSOCIATES.COM

SEAL

LICENSE #: LA003025

TEAM

LANDSCAPE ARCHITECT
ORSATTI + STUART ASSOCIATES
860 FIRST AVENUE, SUITE 9B
KING OF PRUSSIA, PA 19406
TEL. 610.337.2100

CIVIL ENGINEER
dH ENTERPRISES
2815 PENN AVENUE
WEST LAWN, PA 19609
TEL. 610.927.4242

PROJECT NAME

TROUTBECK FARM SUBDIVISION

WILLISTOWN TOWNSHIP
CHESTER COUNTY
PENNSYLVANIA

CLIENT

MOSER CONSTRUCTION MGMT, LLC.
1171 LANCASTER AVENUE, SUITE 201
BERWYN, PA 19312
TEL. 610.725.0812

REVISIONS

NO.	DATE	NOTES
1	12/20/2019	REVISIONS PER TOWNSHIP REVIEW LETTER DATED 11/18/19
2	2/5/2020	REVISIONS PER TOWNSHIP REVIEW LETTER DATED 1/20/20

DRAWN BY	KTD
CHECKED BY	PJS
SCALE	VARIES
DATE	10.21.2019

DRAWING NAME

PRELIMINARY / FINAL
RIPARIAN BUFFER PLANTINGS

DRAWING NUMBER LP - 5
SHEET NUMBER