PRELIMINARY & FINAL LAND DEVELOPMENT PLAN

PRESERVE AT WILLISTOWN

WILLISTOWN TOWNSHIP - CHESTER COUNTY - PENNSYLVANIA

Stop - Call Before You Dig!
Pennsylvania Act 181 (2007) requires notification by excavators, designers, or any person preparing to disturb the earth's surface anywhere in the commonwealth
Pennsylvania One Call System, Inc.
811 or 1-800-242-1776

SHEET LIST		
SHEET NUMBER	DRAWING NUMBER	SHEET DESCRIPTION
1	TS187872	TITLE SHEET
2	FP187872	LOT CONSOLIDATION PLAN
3	EF187872	EXISTING FEATURES, CONSERVATION & DEMOLITION PLAN
4	SF187872	SURROUNDING FEATURES WITHIN 400' PLAN
5	PN187872	PROJECT NOTES
6	SP187872	OVERALL SITE PLAN
7	SP287872	SITE PLAN
8	EA187872	EASEMENT PLAN
9	OP187872	OPEN SPACE PLAN
10	GU187872	OVERALL GRADING PLAN
11	GU287872	GRADING PLAN
12	UT187872	OVERALL UTILITY PLAN
13	UT287872	UTILITY PLAN
14	RP187872	PLAN & PROFILE: ROADS A & B
15	RP287872	PLAN & PROFILE: ROAD C & UTILITY PROFILES
16	RP387872	UTILITY PROFILES
17	LA187872	LANDSCAPE PLAN
18	LA287872	LANDSCAPE DETAILS & NOTES
19	LA387872	LANDSCAPE DETAILS
20	LI187872	LIGHTING PLAN
21	CD187872	CONSTRUCTION DETAILS
22	CD287872	CONSTRUCTION DETAILS
23	CD387872	CONSTRUCTION DETAILS
24	CD487872	CONSTRUCTION DETAILS
25	CD587872	CONSTRUCTION DETAILS
26	TC187872	EMERGENCY VEHICLE CIRCULATION PLAN

SUPPLEMENTAL DRAWINGS:

SHEET LIST		
SHEET NUMBER	DRAWING NUMBER	SHEET DESCRIPTION
1	ES187872	EROSION & SEDIMENT CONTROL PLAN
2	ES287872	EROSION & SEDIMENT CONTROL PLAN
3	ES387872	EROSION & SEDIMENT CONTROL DETAILS
4	ES487872	EROSION & SEDIMENT CONTROL DETAILS
5	ES587872	EROSION & SEDIMENT CONTROL DETAILS/NOTES
6	ES687872	EROSION & SEDIMENT CONTROL NOTES

SHEET LIST		
SHEET NUMBER	DRAWING NUMBER	SHEET DESCRIPTION
1	PC187872	POST CONSTRUCTION STORMWATER MANAGEMENT PLAN
2	PC287872	POST CONSTRUCTION STORMWATER MANAGEMENT DETAILS
3	PC387872	POST CONSTRUCTION STORMWATER MANAGEMENT DETAILS
4	PC487872	POST CONSTRUCTION STORMWATER MANAGEMENT DETAILS
5	PC587872	POST CONSTRUCTION STORMWATER MANAGEMENT NOTES

PLANS TO BE RECORDED

SUPPLEMENTAL SUBDIVISION PLAN FOR WORINGTON COMMONS

SUBDIVISION PLAN FOR WORINGTON COMMONS "LOT LINE CHANGE FOR CONVEYANCE", PREPARED BY EDWARD B. WALSH & ASSOCIATES, INC., PROJECT 4497, DATED 11/5/18, LAST REVISED 1/30/19, SHEET 1 OF 1, SHOWING THE CONVEYANCE OF 1.362 ACRES OF LAND FROM WORINGTON COMMONS TO ROUSE/CHAMBERLIN, LTD.

THIS PLAN SHALL BE RECORDED CONCURRENTLY WITH THE SUBJECT LAND DEVELOPMENT PLANS FOR PRESERVE AT WILLISTOWN.

SURVEYOR'S CERTIFICATION

I, ______________________, A PROFESSIONAL LAND SURVEYOR LICENSED IN THE COMMONWEALTH OF PENNSYLVANIA, DO HEREBY CERTIFY THAT THE OUTBOUND BOUNDARY INFORMATION AND SURVEY WAS PERFORMED IN ACCORDANCE WITH THE MINIMUM STANDARDS FOR BOUNDARY SURVEYS SECTION OF THE MANUAL OF PRACTICE FOR PROFESSIONAL LAND SURVEYORS IN THE COMMONWEALTH OF PENNSYLVANIA, AS ADOPTED BY THE PENNSYLVANIA SOCIETY OF LAND SURVEYORS ON JULY 10, 1998, THAT THIS PLAN REPRESENTS A SURVEY MADE BY ME, THAT ALL MONUMENTS EXIST OR SHALL BE PLACED OR LOCATED, AND THAT ALL DIMENSIONAL AND GEODETIC DETAILS ARE CORRECT.

______________________ SIGNATURE ______________________ DATE
NAME:
PLS LICENSE NO:

ENGINEER'S CERTIFICATION

I, NICHOLAS E. FEOLA, P.E., A PROFESSIONAL ENGINEER LICENSED IN THE COMMONWEALTH OF PENNSYLVANIA, HEREBY CERTIFY THAT THE PLAN AND DESCRIBED HEREON, AS WELL AS OTHER DRAWINGS WHICH ARE PART OF THIS PLAN SET, ARE TRUE AND CORRECT TO THE ACCURACY REQUIRED BY THE WILLISTOWN TOWNSHIP ZONING AND SUBDIVISION AND LAND DEVELOPMENT ORDINANCES, AND WERE PREPARED BY ME OR UNDER MY DIRECTION FOR WHICH I ACCEPT FULL RESPONSIBILITY.

______________________ SIGNATURE ______________________ DATE
NICHOLAS E. FEOLA
PE NO. PE046396E

APPLICANTS CERTIFICATE OF CONFORMITY

THE APPLICANT CERTIFIES THAT THE PLANS ARE IN CONFORMITY WITH ENGINEERING, ZONING, SUBDIVISION, BUILDING, SANITATION, AND OTHER APPLICABLE TOWNSHIP ORDINANCES AND REGULATIONS.

APPLICANTS SIGNATURE ______________________.
NAME, TITLE

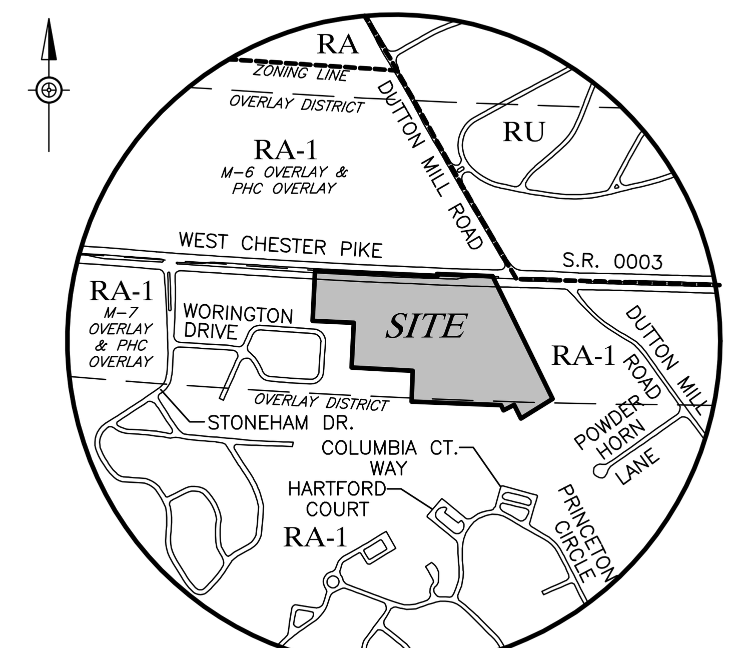

0 800'

LOCATION MAP
SCALE: 1"=800'

COMMONWEALTH OF PENNSYLVANIA
COUNTY OF CHESTER

ON THIS, THE ________ DAY OF ____________, 2019, BEFORE ME THE SUBSCRIBER, A NOTARY PUBLIC OF THE COMMONWEALTH OF PENNSYLVANIA, RESIDING IN ____________ PERSONALLY APPEARED ______________ WHO ACKNOWLEDGES ___SELF TO BE THE ______________ OF WORINGTON COMMONS CONDOMINIUM ASSOCIATION, A ______________, AND THAT AS SUCH TO DO SO, ________ EXECUTED THE FOREGOING PLAN BY SIGNING THE NAME OF THE SAID ______________ BY SELF AS ______________, THAT THE SAID ______________ IS THE OWNER OF THE DESIGNATED LAND, THAT ALL NECESSARY APPROVALS OF THE PLAN HAVE BEEN OBTAINED AND IS ENDORSED THEREON, AND DESIRES THAT THE FOREGOING PLAN BE DULY RECORDED.

AUTHORIZED SIGNATURE ______________________.
NAME, TITLE

IN WITNESS WHEREOF, I HEREUNTO SET MY HAND AND OFFICIAL SEAL

______________________.
NOTARY PUBLIC

MY COMMISSION EXPIRES: ______________________.

COMMONWEALTH OF PENNSYLVANIA
COUNTY OF CHESTER

ON THIS, THE ________ DAY OF ____________, 2019, BEFORE ME THE SUBSCRIBER, A NOTARY PUBLIC OF THE COMMONWEALTH OF PENNSYLVANIA, RESIDING IN ____________ PERSONALLY APPEARED ______________ WHO ACKNOWLEDGES ___SELF TO BE THE ______________ OF ROUSE/CHAMBERLIN, LTD, A ______________, AND THAT AS SUCH TO DO SO, ________ EXECUTED THE FOREGOING PLAN BY SIGNING THE NAME OF THE SAID ______________ BY ___SELF AS ______________, THAT THE SAID ______________ IS THE OWNER OF THE DESIGNATED LAND, THAT ALL NECESSARY APPROVALS OF THE PLAN HAVE BEEN OBTAINED AND IS ENDORSED THEREON, AND DESIRES THAT THE FOREGOING PLAN BE DULY RECORDED.

AUTHORIZED SIGNATURE ______________________.
NAME, TITLE

IN WITNESS WHEREOF, I HEREUNTO SET MY HAND AND OFFICIAL SEAL

______________________.
NOTARY PUBLIC

MY COMMISSION EXPIRES: ______________________.

CERTIFICATION OF REVIEW BY THE TOWNSHIP PLANNING COMMISSION

REVIEWED BY THE PLANNING COMMISSION OF WILLISTOWN TOWNSHIP, CHESTER COUNTY, PENNSYLVANIA THIS ________ DAY OF ____________, 2019.

____
CHAIRPERSON

CERTIFICATION OF APPROVAL BY THE BOARD OF SUPERVISORS

APPROVED BY THE BOARD OF SUPERVISORS OF WILLISTOWN TOWNSHIP, CHESTER COUNTY, PENNSYLVANIA THIS ________ DAY OF ____________, 2019.

____
CHAIRMAN
____
VICE-CHAIRMAN
____
MEMBER

CERTIFICATION OF REVIEW BY THE CHESTER COUNTY PLANNING COMMISSION

REVIEWED THIS ___ DAY OF ____________, 2019 BY THE CHESTER COUNTY PLANNING COMMISSION.

____
DIRECTOR

SITE DATA:

NUMBER OF UNITS: 39 SINGLE FAMILY ATTACHED UNITS

PARKING CALCULATIONS:

REQUIRED SPACES: 2 SPACES PER UNIT = 78 SPACES

PROVIDED SPACES: 2 PER UNIT = 78 SPACES
GUEST PARKING = 24 SPACES
TOTAL =102 SPACES
2.6 SPACES PER UNIT

PROVIDED RECREATIONAL OPEN SPACE:

AREA = 3.356 AC = 33.0% OF NET LOT AREA

PROVIDED COVERAGES:

NET QUALIFYING TOWNHOUSE LOT AREA = 437,556 SF

BUILDING AREA*	= 63,838 SF = 14.6% OF NET LOT AREA
DECKS (10'X12')	= 2,160 SF
PAVEMENT:	
CIRCULATION DRIVES AND GUEST PARKING	= 42,287 SF
TOWNHOUSE DRIVEWAYS	= 16,555 SF
EMERGENCY ACCESS DRIVE	= 2,869 SF
PAVED AREAS FOR USE BY AUTOMOBILES	= 61,711 SF
TOTAL BUILDING & PAVED AREAS FOR USE BY AUTOMOBILES	= 127,709 SF (29.2% OF NET LOT AREA)

*INCLUDES ALL BUILDING OPTIONS

PURPOSE OF PLAN:

THE INTENT OF THIS PLAN IS TO CONSOLIDATE UPI #'S 54-8-29, 54-8-30, 54-8,31, AND 54-8-32, AND 59,330 SQUARE FEET (1.362) ACRES FROM UPI 54-8-28 (WORINGTON COMMONS), AND THE SUBSEQUENT DEVELOPMENT OF 39 TOWNHOUSE UNITS.

PENNDOT HIGHWAY OCCUPANCY PERMIT NOTE

ANY WORK WITHIN A HIGHWAY OR RIGHT OF WAY UNDER THE JURISDICTION OF THE PENNSYLVANIA DEPARTMENT OF TRANSPORTATION REQUIRES A HIGHWAY OCCUPANCY PERMIT PURSUANT TO SECTION 420 OF THE ACT OF JUNE 1, 1945 (P.L. 1242, NO. 428), KNOWN AS THE STATE HIGHWAY LAW", BEFORE ANY WORK CAN BE DONE.

WORINGTON COMMONS DENSITY

PER WORINGTON COMMONS AMENDED CONDITIONAL USE PLAN REFERENCED IN NOTE #2 HEREON, THE EXISTING DEVELOPABLE ACREAGE OF WORINGTON COMMONS IS 10.048 ACRES WHICH SUPPORTS A MAXIMUM OF 60.275 DWELLING UNITS AND COMPLIES WITH THE EXISTING 60 DWELLING UNITS.

THIS PLAN PROPOSES AN ADDITIONAL 1,040 SQ. FT. (0.024 AC.) SANITARY SEWER EASEMENT OVER WORINGTON COMMONS RESULTING IN A NEW DEVELOPABLE ACREAGE FOR WORINGTON COMMONS OF 10.024 ACRES WHICH SUPPORTS A MAXIMUM 60.144 DWELLING UNITS AND COMPLIES WITH THE EXISTING 60 DWELLING UNITS.

WAIVER REQUESTS:

CHAPTER 123 – SUBDIVISION AND LAND DEVELOPMENT ORDINANCE

- SECTION 123–28.C – A WAIVER FROM INTERSECTIONS INVOLVING ARTERIAL STREETS TO BE LOCATED NOT LESS THAN 1,000 FEET APART MEASURED CENTERLINE TO CENTERLINE, SUBJECT TO ANY CHANGES THAT MAY BE REQUIRED AS A RESULT OF PENNDOT REVIEWS AND APPROVALS. THE ORDINANCE STATES TO THE FULLEST EXTENT POSSIBLE TO BE NOT LESS THAN 1,000' THE EXISTING CENTERLINE TO CENTERLINE DISTANCE BETWEEN EXISTING STONEHAM DRIVE AND EXISTING DUTTON MILL ROAD ALONG WEST CHESTER PIKE IS APPROXIMATELY 1,975'. THERE IS 1,055' FROM THE PROPOSED ROAD A INTERSECTION WITH WEST CHESTER PIKE TO THE STONEHAM DRIVE INTERSECTION, AND 920' FROM THIS INTERSECTION TO DUTTON MILL ROAD INTERSECTION, WHICH IS DIMINIMOUS. THE APPLICANT SUBMITTED A TRAFFIC IMPACT STUDY, WHICH DID NOT INDICATE ANY NEGATIVE CONCERNS WITH RESPECT TO TRAFFIC FLOW OR SAFETY WITH THE PROPOSED STREET INTERSECTION SPACING.
- SECTION 123–38.B. – TO ALLOW THE USE OF BELGIAN BLOCK CURB AS AN ALTERNATE TO CONCRETE CURB FOR THE ON-SITE ROADS, AND TO ALLOW A 7" REVEAL INSTEAD OF 8". THE DEVELOPER MAY CHOOSE TO USE BELGIAN BLOCK CURB IN ALL OR PORTIONS OF THE DEVELOPMENT FOR AESTHETIC PURPOSES. THE ROADS WILL BE PRIVATELY OWNED AND MAINTAINED BY THE HOMEOWNERS/COMMUNITY ASSOCIATION.

ZONING DATA:

RA-1 RESIDENTIAL ZONING DISTRICT WITH M-7 MULTI-FAMILY OVERLAY:
DISTRICT REQUIREMENTS

	REQUIRED	PROVIDED
MIN. LOT AREA:	10 AC.	10.045 AC. (437,556 SF)(NET)
MIN. LOT WIDTH:	300 FT.	905 FT.
MAX. BLDG. COVERAGE:	15%	15.0%
MAX. COVERAGE BY BUILDINGS AND PAVED AREAS FOR USE BY AUTOS:	35%	29.6%
MIN. OUTDOOR RECREATION AREA:	30%	33.0%
MIN. YARD SETBACKS: FRONT:	75 FT.	75 FT.
SIDE:	50 FT.	50 FT.
REAR:	50 FT.	50 FT.
MIN. BLDG. SEPARATION:	60 FT. 75 FT. BETWEEN FACING WALLS WITH WINDOWS WITHIN 25'	60 FT. 75 FT. BETWEEN FACING WALLS WITH WINDOWS WITHIN 25'
MIN. PROPERTY BUFFER AREA:	25 FT.	25 FT.
MAX. BLDG. LENGTH:	220 FT. 160 FT. IF ORIENTED IN THE SAME DIRECTION	172 FT.
MAX. BLDG. HEIGHT (ATTACHED BUILDINGS):	35 FT. OR 3 STORIES	≤35 FT. OR 3 STORIES
MAX. DWELLING UNITS:	6 DU/AC.	39 DU (4.65 DU/DEVELOPABLE AC.)

NET LOT AREA CALCULATION:

	AREA (S.F.)	AREA (AC.)
GROSS AREA OF FOUR BASE LOTS =	469,928	10.788
AREA ACQUIRED FROM WORINGTON COMMONS =	59,330	1.362
TOTAL GROSS AREA =	529,258	12.150
LESS EXISTING R/W =	62,091	1.425
LESS UTILITY EASEMENTS =	24,120	0.554
NET LOT AREA =	443,047	10.171
LESS AREA NARROWER THAN 300' (§139-49.G.(1))	5,491	0.126
QUALIFYING AREA FOR TOWNHOUSE USE =	437,556	10.045

PERMITTED YIELD/DENSITY CALCULATION (§73-11.1):

	AREA (S.F.)	AREA (AC.)
GROSS TRACT AREA =	529,258	12.150
LESS EXISTING ROAD & UTIL. R/WS =	86,211	1.979
LESS PROPOSED ROAD & UTIL. R/WS =	69,870	1.604
BASE SITE AREA =	373,177	8.567

	AREA (S.F.)	AREA (AC.)	MULTIPLIER	PROTECTED LAND (AC.)
RIPARIAN BUFFER	0	0.000	100%	0.000
FLOOD	0	0.000	100%	0.000
WETLANDS	0	0.000	100%	0.000
SLOPES >25%	0	0.000	100%	0.000
SLOPES 15-25%	16,117	0.370	50%	0.185
WOODLANDS	0	0.000	75%	0.000
HYDRIC SOILS	0	0.000	50%	0.000
RIPARIAN BUFFER	0	0.000	100%	0.000
			TOTAL PROTECTED LAND =	0.185

DEVELOPABLE LAND (BASE SITE AREA – TOTAL PROTECTED LAND) =
(8.567 AC. – 0.185 AC.) = 8.382 AC.

MAX ALLOWABLE UNITS DEVELOPABLE LAND (8.382 AC.) X 6 DU/AC = 50 UNITS

RECORD OWNER & PARCEL INFORMATION:

UPI #54-8-29
ROBERT F. DOERR & TRACY A. BROOK
1716 W. CHESTER PIKE
WEST CHESTER, PA 19382
DB. 6701, PG. 2377

UPI #54-8-30
JAMES M. MCGARRY
1718 W. CHESTER PIKE
WEST CHESTER, PA 19382
DB. 7365, PG. 860

UPI #54-8-31
1720 W. CHESTER PIKE, L.P.
P.O. BOX 467
CONCORDVILLE, PA 19331
DB. 6951, PG. 1254

UPI #54-8-32
JOSEPH D. DANDREA
1722 W. CHESTER PIKE
WEST CHESTER, PA 19382
DB. 4815, PG. 1722

UPI #54-8-28.1
WORINGTON COMMONS CONDOMINIUM ASSOCIATION
803 W. MARKET STREET
WEST CHESTER, PA 19382
DB. 247, PG. 420

APPLICANT/EQUITABLE OWNER:

ROUSE/CHAMBERLIN, LTD.
500 EXTON COMMONS
EXTON, PA 19341
(610) 524-1500

RECORDER OF DEEDS

RECORDER OF DEEDS

RECORDED IN THE OFFICE OF THE RECORDER OF DEEDS OF CHESTER COUNTY AT WEST CHESTER, PA IN PLAN BOOK ______ PAGE ______, ON THE ____ DAY OF ______________, 2019.

____
(DEPUTY) RECORDER OF DEEDS

NO.	REVISION	DATE	BY
2	REVISED PER TOWNSHIP REVIEW LETTER DATED 12/11/18	1/30/19	BG
1	REVISED PER TOWNSHIP REVIEW LETTERS DATED 9/13/18 & 10/26/18	11/5/18	BG

SEAL

NORTH

MANAGER NF	
DESIGN KK	CHKD. BY
DRAFT BG	CHKD. BY
FILE ROU-01	DATE 8/9/2018
NOTES	SCALE AS NOTED

BURSICH
Sharing your Vision

Corporate Headquarters
2129 East High Street
Pottstown, PA 19464
610-323-4040

Southampton Office
706 Lakeside Drive
Southampton, PA 18966

www.bursich.com

CLIENT
ROUSE/CHAMBERLIN, LTD
500 EXTON COMMONS
EXTON, PA 19341

SUBJECT
TITLE SHEET – RECORD PLAN 1 OF 6

PRESERVE AT WILLISTOWN

WILLISTOWN TOWNSHIP, CHESTER COUNTY, PENNSYLVANIA

JOB NO. 187872

DWG. NO. TS187872

P:\ROU-01\187872-00\dwg\LD_Plan\TS187872.dwg

© COPYRIGHT BURSICH ASSOCIATES, INC. 2018
ALL REPORTS, DOCUMENTS, SPECIFICATIONS, COMPUTER FILES, FIELD DATA, NOTES AND OTHER DOCUMENTS AND INSTRUMENTS PREPARED BY BURSICH ASSOCIATES, INC. AS INSTRUMENTS OF SERVICE SHALL REMAIN THE PROPERTY OF BURSICH ASSOCIATES, INC. AND THEREFORE SHALL RETAIN ALL COMMON LAW, STATUTORY AND OTHER RESERVED RIGHTS, INCLUDING THE COPYRIGHT THERETO. ANY USE, REUSE OR MODIFICATION/ALTERATION AND REPRODUCTION WITHOUT THE EXPRESS WRITTEN CONSENT OF BURSICH ASSOCIATES, INC. IS STRICTLY PROHIBITED. ANY USE, REUSE OR MODIFICATION/ALTERATION BY ANYONE WITHOUT WRITTEN CONSENT SHALL BE DEEMED AN AGREEMENT BETWEEN THE USER AND BURSICH ASSOCIATES, INC. WHICH SHALL INDEMNIFY AND SAVE HARMLESS BURSICH ASSOCIATES, INC. FOR ALL CLAIMS, DAMAGES, LOSSES AND EXPENSES ARISING FROM THE USE THEREFROM.

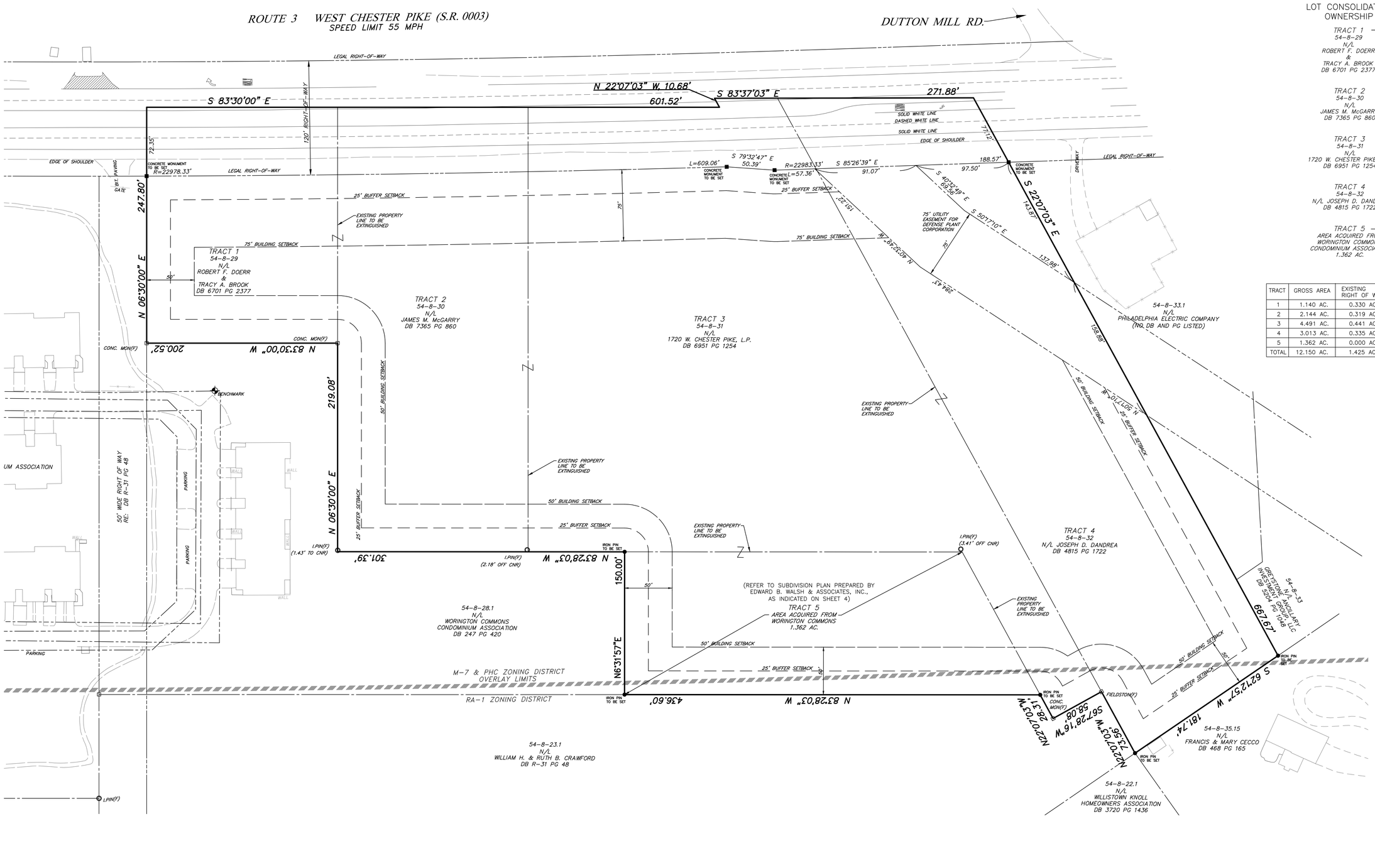

LOT CONSOLIDATION OWNERSHIP

TRACT 1
54-8-29
N/L
ROBERT F. DOERR
&
TRACY A. BROOK
DB 6701 PG 2377

TRACT 2
54-8-30
N/L
JAMES M. McGARRY
DB 7365 PG 860

TRACT 3
54-8-31
N/L
1720 W. CHESTER PIKE, L.P.
DB 6951 PG 1254

TRACT 4
54-8-32
N/L JOSEPH D. DANDREA
DB 4815 PG 1722

TRACT 5
AREA ACQUIRED FROM WORINGTON COMMONS CONDOMINIUM ASSOCIATION
1.362 AC.

SUBJECT TO LOT CONSOLIDATION

TRACT	GROSS AREA	EXISTING RIGHT OF WAY	NET LOT AREA
1	1.140 AC.	0.330 AC.	0.810 AC.
2	2.144 AC.	0.319 AC.	1.825 AC.
3	4.491 AC.	0.441 AC.	4.050 AC.
4	3.013 AC.	0.335 AC.	2.678 AC.
5	1.362 AC.	0.000 AC.	1.362 AC.
TOTAL	12.150 AC.	1.425 AC.	10.725 AC.

© COPYRIGHT BURSICH ASSOCIATES, INC. 2018
ALL DRAWINGS, SPECIFICATIONS, COMPUTER FILES, DATA, NOTES AND OTHER DOCUMENTS AND INSTRUMENTS PREPARED BY BURSICH ASSOCIATES, INC. AS INSTRUMENTS OF SERVICE SHALL REMAIN THE PROPERTY OF BURSICH ASSOCIATES, INC. AND THEREFORE SHALL RETAIN ALL COMMON LAW, STATUTORY AND OTHER RESERVED RIGHTS, INCLUDING THE COPYRIGHT THERETO. ANY USE OR REUSE BY ANYONE OTHER THAN THE OWNER WITHOUT THE EXPRESS WRITTEN CONSENT OF BURSICH ASSOCIATES, INC. IS STRICTLY PROHIBITED. ANY USE, REUSE OR REPRODUCTION WITHOUT SUCH WRITTEN CONSENT SHALL BE AT THE USER'S SOLE RISK AND WITHOUT LIABILITY TO THE USER AND BURSICH ASSOCIATES, INC. WHICH SHALL INDEMNIFY AND SAVE HARMLESS BURSICH ASSOCIATES, INC. FOR ALL CLAIMS, DAMAGES, LOSSES AND EXPENSES ARISING FROM THE USE THEREFROM.

NO.	REVISION	DATE	BY
2	REVISED PER TOWNSHIP REVIEW LETTER DATED 12/11/18	1/30/19	BG
1	REVISED PER TOWNSHIP REVIEW LETTERS DATED 9/13/18 & 10/26/18	11/5/18	BG

SEAL

NORTH

MANAGER NF	
DESIGN KK	CHKD. BY
DRAFT BG	CHKD. BY
FILE ROU-01	DATE 8/9/2018
NOTES 1"=50'	SCALE

BURSICH
Sharing your Vision

Corporate Headquarters
2129 East High Street
Pottstown, PA 19464
610-323-4040

Southampton Office
706 Lakeside Drive
Southampton, PA 18966

www.bursich.com

CLIENT
ROUSE/CHAMBERLIN, LTD
500 EXTON COMMONS
EXTON, PA 19341

SUBJECT
LOT CONSOLIDATION PLAN – RECORD PLAN 2 OF 6

PRESERVE AT WILLISTOWN

WILLISTOWN TOWNSHIP, CHESTER COUNTY, PENNSYLVANIA

JOB NO. 187872
SHEET NO. 2 OF 26
DWG. NO. FP187872

P:\ROU-01\187872-00\dwg\LD_Plan\FP187872.dwg

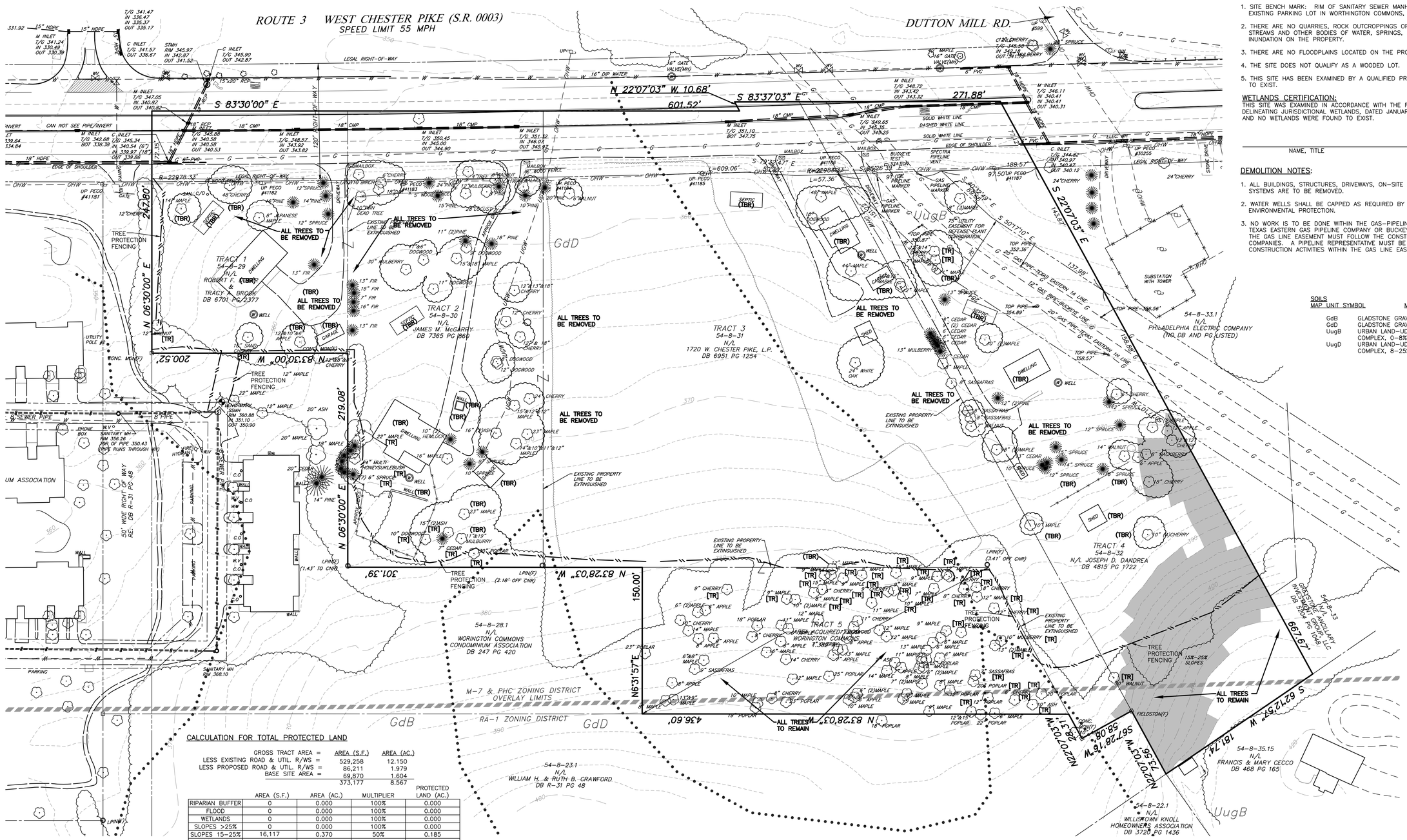

GENERAL NOTES:

1. SITE BENCH MARK: RIM OF SANITARY SEWER MANHOLE LOCATED IN NORTHEAST CORNER OF EXISTING PARKING LOT IN WORTHINGTON COMMONS, ELEVATION 360.88.
2. THERE ARE NO QUARRIES, ROCK OUTCROPPINGS OR OTHER GEOLOGICAL FORMATIONS, PONDS, STREAMS AND OTHER BODIES OF WATER, SPRINGS, ,MARSHES, OTHER AREAS SUBJECT TO INUNDATION ON THE PROPERTY.
3. THERE ARE NO FLOODPLAINS LOCATED ON THE PROPERTY.
4. THE SITE DOES NOT QUALIFY AS A WOODED LOT.
5. THIS SITE HAS BEEN EXAMINED BY A QUALIFIED PROFESSIONAL AND NO WETLANDS WERE FOUND TO EXIST.

WETLANDS CERTIFICATION:

THIS SITE WAS EXAMINED IN ACCORDANCE WITH THE FEDERAL MANUAL FOR IDENTIFYING AND DELINEATING JURISDICTIONAL WETLANDS, DATED JANUARY 10, 1989, OR AS LATER AMENDED, AND NO WETLANDS WERE FOUND TO EXIST.

_____
NAME, TITLE

DEMOLITION NOTES:

1. ALL BUILDINGS, STRUCTURES, DRIVEWAYS, ON-SITE UTILITIES TO BUILDINGS, AND SEPTIC SYSTEMS ARE TO BE REMOVED.
2. WATER WELLS SHALL BE CAPPED AS REQUIRED BY THE PENNSYLVANIA DEPARTMENT OF ENVIRONMENTAL PROTECTION.
3. NO WORK IS TO BE DONE WITHIN THE GAS-PIPELINE EASEMENT WITHOUT THE APPROVAL OF TEXAS EASTERN GAS PIPELINE COMPANY OR BUCKEYE PARTNERS L.P. ALL WORK WITHIN THE GAS LINE EASEMENT MUST FOLLOW THE CONSTRUCTION PROTOCOLS OF THE GAS LINE COMPANIES. A PIPELINE REPRESENTATIVE MUST BE ON SITE TO OBSERVE ANY CONSTRUCTION ACTIVITIES WITHIN THE GAS LINE EASEMENT.

SOILS

MAP UNIT SYMBOL	MAP UNIT NAME
GdB	GLADSTONE GRAVELLY LOAM, 3–8% SLOPES
GdD	GLADSTONE GRAVELLY LOAM, 15–25% SLOPES
UugB	URBAN LAND–UDORTHENTS, SCHIST AND GNEISS COMPLEX, 0–8% SLOPES
UugD	URBAN LAND–UDORTHENTS, SCHIST AND GNEISS COMPLEX, 8–25% SLOPES

CALCULATION FOR TOTAL PROTECTED LAND

	AREA (S.F.)	AREA (AC.)
GROSS TRACT AREA =	529,258	12.150
LESS EXISTING ROAD & UTIL. R/WS =	86,211	1.979
LESS PROPOSED ROAD & UTIL. R/WS =	69,870	1.604
BASE SITE AREA =	373,177	8.567

	AREA (S.F.)	AREA (AC.)	MULTIPLIER	PROTECTED LAND (AC.)
RIPARIAN BUFFER	0	0.000	100%	0.000
FLOOD	0	0.000	100%	0.000
WETLANDS	0	0.000	100%	0.000
SLOPES >25%	0	0.000	100%	0.000
SLOPES 15–25%	16,117	0.370	50%	0.185
WOODLANDS	0	0.000	75%	0.000
HYDRIC SOILS	0	0.000	50%	0.000
RIPARIAN BUFFER	0	0.000	100%	0.000
			TOTAL PROTECTED LAND =	0.185

DEVELOPABLE LAND (BASE SITE AREA – TOTAL PROTECTED LAND) =
(8.567 AC. – 0.185 AC.) = 8.382 AC.
MAX ALLOWABLE UNITS DEVELOPABLE LAND (8.382 AC.) X 6 DU/AC = 50 UNITS

EXISTING FEATURES LEGEND

CONCRETE MONUMENT FOUND
IRON PIN FOUND
SITE BENCHMARK
PROPERTY LINE
ADJOINER LINE
LEGAL RIGHT OF WAY
EASEMENT LINE
CONCRETE CURB
EDGE OF PAVE
EDGE OF DRIVE
FENCE LINE
CONTOURS
SPOT ELEVATION
WOOD LINE
BRUSH LINE
TREES
SANITARY SEWER MAIN
SANITARY SEWER CLEANOUT
SANITARY SEWER MANHOLE
STORM SEWER
MBC TYPE INLETS
WATER MAIN
FIRE HYDRANT
WATER VALVE
WATER MANHOLE
GAS MAIN
GAS VALVE
OVERHEAD WIRES
UNDERGROUND WIRES
UTILITY POLE
SIGN
MAILBOX
15–25% SLOPES
SOILS
ZONING LINE
TO BE REMOVED
TO REMAIN
PROPOSED TREE PROTECTION FENCE
SLANTED TEXT DENOTES EXISTING FEATURE

0 50' 100'
GRAPHIS SCALE: 1"=50'

© COPYRIGHT BURSICH ASSOCIATES, INC., 2018
THE PLANS, SPECIFICATIONS, REPORTS, RECORDS, DATA, NOTES AND OTHER DOCUMENTS AND INSTRUMENTS PREPARED BY BURSICH ASSOCIATES, INC. AS INSTRUMENTS OF SERVICE SHALL REMAIN THE PROPERTY OF BURSICH ASSOCIATES, INC. AND THEREFORE SHALL RETAIN ALL COMMON LAW, STATUTORY AND OTHER RESERVED RIGHTS, INCLUDING THE COPYRIGHT THERETO. THE REPRODUCTION, DISTRIBUTION AND USE OF THE DOCUMENTS WITHOUT THE EXPRESS WRITTEN CONSENT OF BURSICH ASSOCIATES, INC. IS STRICTLY PROHIBITED. ANY USE, REUSE OR MODIFICATION OF THE DOCUMENTS BY ANYONE WITHOUT THE EXPRESS WRITTEN CONSENT OF BURSICH ASSOCIATES, INC. BY THE USER AND BURSICH ASSOCIATES, INC. WHICH SHALL INDEMNIFY AND SHAL HARMLESS BURSICH ASSOCIATES, INC. FOR ALL CLAIMS, DAMAGES, LOSSES AND EXPENSES ARISING FROM THE USE THEREFROM.

NO.	REVISION	DATE	BY
2	REVISED PER TOWNSHIP REVIEW LETTER DATED 12/11/18	1/30/19	BG
1	REVISED PER TOWNSHIP REVIEW LETTERS DATED 9/13/18 & 10/26/18	11/5/18	BG

SEAL

NORTH

MANAGER	NF
DESIGN	KK
CHKD. BY	
DRAFT	BG
CHKD. BY	
FILE	ROU-01
DATE	8/9/2018
NOTES	
SCALE	1"=50'

BURSICH
Sharing your Vision

Corporate Headquarters
2129 East High Street
Pottstown, PA 19464
610-323-4040

Southampton Office
706 Lakeside Drive
Southampton, PA 18966

www.bursich.com

CLIENT
ROUSE/CHAMBERLIN, LTD
500 EXTON COMMONS
EXTON, PA 19341

SUBJECT
EXISTING FEATURES, CONSERVATION & DEMOLITION PLAN

PRESERVE AT WILLISTOWN

WILLISTOWN TOWNSHIP, CHESTER COUNTY, PENNSYLVANIA

JOB NO. 187872
SHEET NO. 3 OF 26
DWG. NO. EF187872

P:\ROU-01\187872-00\dwg\LD_Plan\EF187872.dwg

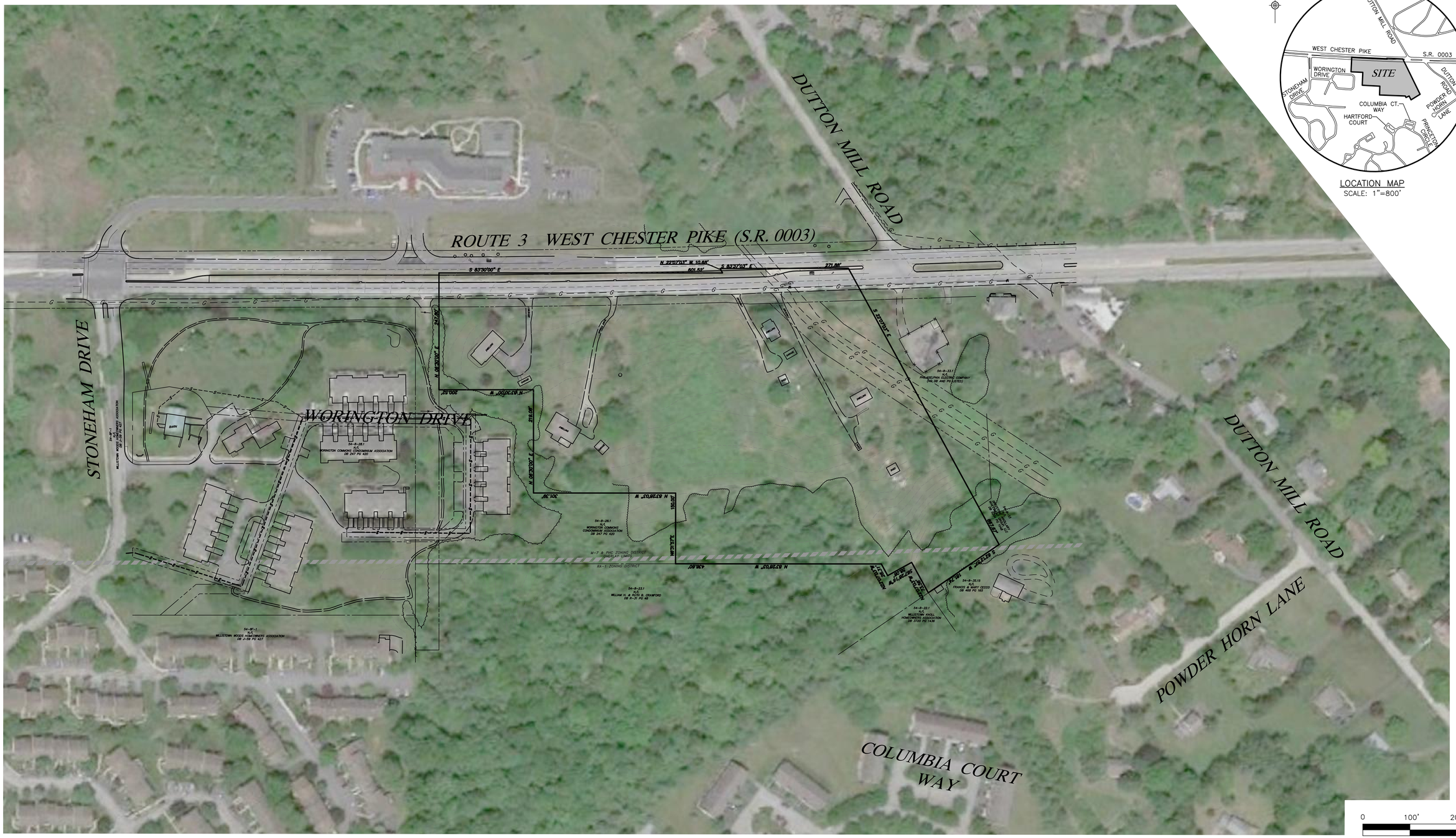
ROUTE 3 WEST CHESTER PIKE (S.R. 0003)
DUTTON MILL ROAD
STONEHAM DRIVE
WORINGTON DRIVE
POWDER HORN LANE
COLUMBIA COURT WAY
S 83°30'00" E
N 22°07'03" W 10.68'
S 83°37'03" E
271.86'
S 22°29'57" E
N 67°30'00" W
N 05°30'00" E
N 67°30'00" W
N 05°30'00" E
N 67°30'00" W
N 67°30'00" W
S 67°30'00" E
N 22°29'57" W
S 22°29'57" E
M-7 & RHC ZONING DISTRICT BOUNDARY LIMITS
RA-1 ZONING DISTRICT
54-8-28.1
N/L
WORINGTON COMMONS CONDOMINIUM ASSOCIATION
DB 247 PG 420
54-8-23.1
N/L
WILLIAM H. & RUTH B. CRAWFORD
DB R-31 PG 68
54-8-23.1
N/L
WILLISTOWN KNOLL HOMEOWNERS ASSOCIATION
DB 3720 PG 1436
54-8-35.15
N/L
FRANCIS & MARY CECCO
DB 466 PG 165
54-8-331
N/L
PHILADELPHIA ELECTRIC COMPANY
(NO DB AND PG LISTED)
54-8-9
N/L
WILLISTOWN WOODS HOMEOWNERS ASSOCIATION
DB 3-38 PG 427
54-8-9
N/L
WILLISTOWN WOODS HOMEOWNERS ASSOCIATION
DB 3-38 PG 427
BARN
BUILDING
BUILDING
BUILDING

GRADING & UTILITY GENERAL NOTES

1. SITE GRADING SHALL BE PERFORMED IN ACCORDANCE WITH THESE PLANS, SPECIFICATIONS, AND REFERENCED DOCUMENTS IN THE PLAN SET. THE CONTRACTOR SHALL BE RESPONSIBLE FOR REMOVING AND UNSUITABLE MATERIAL AND REPLACING WITH SUITABLE MATERIALS. ALL EXCAVATED OR FILLED AREAS SHALL BE COMPACTED TO 95% OF MODIFIED PROCTOR MAXIMUM DENSITY PER ASTM TEST D–1557. MOISTURE CONTENT AT THE TIME OF PLACEMENT SHALL BE NO MORE THAN 2% ABOVE OR 3% BELOW OPTIMUM. CONTRACTOR SHALL SUBMIT COMPACTION REPORT PREPARED BY A QUALIFIED SOILS ENGINEER, REGISTERED WITH THE STATE WHERE THE WORK IS BEING DONE, VERIFYING THAT ALL FILLED AREAS AND SUBGRADE AREAS WITHIN ANY BUILDING PAD AND AREAS TO BE PAVED HAVE BEEN COMPACTED IN ACCORDANCE WITH THESE PLANS AND SPECIFICATIONS.

2. SUBBASE MATERIAL FOR SIDEWALKS, CURB, OR PAVING SHALL BE FREE OF ORGANICS AND OTHER UNSUITABLE MATERIALS. SHOULD SUBGRADE BE DEEMED UNSUITABLE BY OWNER OR OWNER'S REPRESENTATIVE, SUBGRADE SHALL BE REMOVED AND FILLED WITH MATERIAL COMPACTED TO 95% OPTIMUM DENSITY (AS DETERMINED BY MODIFIED PROCTOR METHOD).

3. ALL SPOT ELEVATIONS SHOWN ON THE PLANS ARE BOTTOM FACE OF CURB OR TOP OF FINISHED PAVING UNLESS OTHERWISE NOTED.

4. THE MINIMUM SLOPE IN GRASSED AREAS SHALL NOT BE LESS THAN 2 PERCENT AND THE MINIMUM IN PAVED AREAS SHALL NOT BE LESS THAN 1 PERCENT. CONTRACTOR SHALL PROVIDE POSITIVE DRAINAGE (2% MIN.) IN ALL PROPOSED GRASS AREAS AWAY FROM ALL STRUCTURES.

5. PROVIDE POSITIVE DRAINAGE AWAY FROM BUILDING UNITS. SLOPES AND SEPARATION BETWEEN FINISHED GRADE AND SILL PLATE SHALL BE IN ACCORDANCE WITH BUILDING CODE OR A MINIMUM SLOPE OF 2%, AND MINIMUM SEPARATION BETWEEN FINISHED GRADE AND SILL PLATE OF 8–INCHES, WHICHEVER CONTROLS.

6. TOP OF WALL AND BOTTOM WALL ELEVATIONS FOR RETAINING WALLS ARE APPROXIMATE AS INDICATED ON THESE PLANS. OWNER TO CHOOSE WALL TYPE AND MATERIAL PRIOR TO CONSTRUCTION. WALL MANUFACTURER AND/OR CONTRACTOR SHALL SUBMIT SHOP DRAWINGS AND SUPPORTING CALCULATIONS PREPARED BY A PROFESSIONAL ENGINEER LICENSED IN THE COMMONWEALTH OF PENNSYLVANIA, INDICATING WALL MATERIAL, DETAILS, ETC. FOR TOWNSHIP APPROVAL PRIOR TO CONSTRUCTION. ALL RETAINING WALLS GREATER THAN 3 FEET IN HEIGHT SHALL REQUIRE FENCING ON TOP OF WALL.

7. THE CONTRACTOR SHALL COMPLY, TO THE FULLEST EXTENT, WITH THE LATEST STANDARDS OF OSHA OR ANY OTHER AGENCY HAVING JURISDICTION FOR EXCAVATION AND TRENCHING PROCEDURES. THE CONTRACTOR IS RESPONSIBLE FOR DETERMINING THE MEANS AND METHODS REQUIRED TO MEET THE INTENT AND PERFORMANCE CRITERIA OF OSHA, AS WELL AS ANY OTHER ENTITY THAT HAS JURISDICTION FOR EXCAVATION AND TRENCHING PROCEDURES.

8. THE CONTRACTOR IS SPECIFICALLY CAUTIONED THAT THE LOCATION AND ELEVATION OF EXISTING UTILITIES AS SHOWN ON THESE PLANS IS BASED UPON RECORDS OF THE VARIOUS UTILITY COMPANIES AND, WHERE POSSIBLE, MEASUREMENTS TAKEN IN THE FIELD. THE INFORMATION IS NOT TO BE RELIED ON AS BEING EXACT OR COMPLETE. THE CONTRACTOR MUST CONTACT THE APPROPRIATE UTILITY COMPANY A MINIMUM OF 72 HOURS PRIOR TO ANY EXCAVATION TO REQUEST FIELD LOCATION OF UTILITIES. IT SHALL BE THE RESPONSIBILITY OF THE CONTRACTOR TO RELOCATE ALL EXISTING UTILITIES WHICH CONFLICT WITH THE PROPOSED IMPROVEMENTS SHOWN ON THE PLANS IN A MANNER WHICH WILL NOT NEGATIVELY AFFECT THE EXISTING USERS OF THESE UTILITIES.

9. THE CONTRACTOR SHALL REFER TO ARCHITECTURAL PLANS AND DOCUMENTS FOR ACTUAL LOCATIONS OF ALL CONNECTION LOCATIONS TO INCLUDE SANITARY SEWER LATERALS, WATER SERVICES, ELECTRICAL, TELEPHONE, GAS, AND CABLE SERVICE. CONTRACTOR SHALL COORDINATE INSTALLATION OF UTILITIES IN SUCH A MANNER AS TO AVOID CONFLICTS AND ASSURE PROPER DEPTHS ARE ACHIEVED AS WELL AS COORDINATING WITH THE REGULATORY AGENCY AS TO LOCATION AND SCHEDULING OF CONNECTIONS TO THEIR FACILITIES.

10. THE CONTRACTOR SHALL FIELD VERIFY ALL EXISTING CONDITIONS, UTILITY LOCATIONS AND INVERTS PRIOR TO CONSTRUCTION. ANY CONDITIONS FOUND TO DIFFER FROM THOSE SHOWN ON THE DRAWINGS SHALL BE IMMEDIATELY BROUGHT TO THE ATTENTION OF THE ENGINEER OF RECORD IN WRITING.

11. ALL UTILITIES SHALL BE PLACED UNDERGROUND. CONSTRUCTION OF UTILITIES SHALL BE TO THE PROPER STANDARDS OF THE APPLICABLE UTILITY AUTHORITY.

12. ALL SANITARY SEWER FACILITIES AND APPURTENANCES SHALL BE CONSTRUCTED IN ACCORDANCE WITH THE AQUA, PA STANDARD SPECIFICATIONS AND DETAILS.

13. THERE SHALL BE A FIVE FOOT MINIMUM HORIZONTAL SEPARATION BETWEEN SANITARY SEWER MAINS AND LATERALS AND LANDSCAPING, TREES, AND SHRUBS.

14. NO STRUCTURES SHALL BE PLACED WITHIN UTILITY EASEMENTS, EXCEPT STRUCTURES ASSOCIATED WITH THE UTILITIES.

15. PROVIDE A MINIMUM HORIZONTAL CLEARANCE OF TEN FEET BETWEEN SANITARY SEWER MAINS AND WATER MAINS. PROVIDE A MINIMUM FIVE FOOT HORIZONTAL CLEARANCE BETWEEN SANITARY SEWER MAINS AND ALL OTHER UTILITIES.

16. AT ALL LOCATIONS WHERE PROPOSED SANITARY LINES OR SERVICES HAVE A VERTICAL CLEARANCE LESS THAN 18–INCHES VERTICAL CLEARANCE WITH WATER LINES OR STORM SEWERS, , THE SANITARY LINE AND/OR LATERAL SHALL BE CONCRETE ENCASED TO A DISTANCE OF 5 FEET MINIMUM ON EACH SIDE OF THE CROSSING.

17. CLEANOUTS AND CURB BOXES WITHIN PAVED AREAS SHALL HAVE TRAFFIC RATED FRAMES AND COVERS.

STORM SEWER NOTES

1. STORM SEWER SYSTEMS SHALL BE CONSTRUCTED IN ACCORDANCE WITH MUNICIPAL, COUNTY, PADEP, AND PENNDOT STANDARDS AND REGULATIONS AS APPLICABLE.

2. WHEN REINFORCED CONCRETE PIPE (RCP) IS SPECIFIED ON THE PLANS, IT SHALL HAVE RUBBER O–RING GASKETS, AND COMPLY WITH ASTM C76 STANDARDS FOR CLASS III WALL B PIPE, UNLESS OTHERWISE NOTED.

3. WHEN HIGH DENSITY POLYETHYLENE PIPE (HDPE) IS SPECIFIED ON THE PLANS, IT SHALL BE SMOOTH LINED CORRUGATED, AND CONFORM TO AASHTO M294 AND TYPE S, WITH GASKET FOR SOIL TIGHT JOINT, UNLESS OTHERWISE NOTED.

4. STORM SEWER INLETS, MANHOLES, HEADWALLS, AND ENDWALLS AND APPURTENANCES SHALL BE IN ACCORDANCE WITH PENNDOT ROADWAY CONSTRUCTION STANDARD DRAWINGS RC–72M, LATEST REVISION, AND PUBLICATION 408 SPECIFICATIONS, LATEST REVISION.

5. ALL INLETS SHALL BE FURNISHED WITH STRUCTURAL STEEL BICYCLE SAFE GRATES.

6. STORM SEWER MANHOLES SHALL BE FOUR FEET IN DIAMETER AND FABRICATED OF REINFORCED CONCRETE EXCEPT WHERE OTHERWISE NOTED. ALL STRUCTURES SHALL BE DESIGNED FOR HS–25 HIGHWAY LOADING.

7. STORM INLETS WITH WATER QUALITY INSERTS (IF INDICATED ON PLANS) SHALL BE PROVIDED WITH THE REQUIRED SUMP DEPTH TO INSTALL THE SNOUT OR APPROVED EQUAL HOOD IN ACCORDANCE WITH MANUFACTURER'S SPECIFICATIONS.

8. CLEANOUTS SHALL BE PLACED AT ALL GRADE CHANGES OR CHANGES IN THE ALIGNMENT OF ROOF DRAIN/RAIN WATER CONDUCTORS.

CONDITIONAL USE DECISION FOR APPLICATION OF 1720 W. CHESTER PIKE, NO. C–7–14

THE BOARD OF SUPERVISORS OF WILLISTOWN TOWNSHIP ON DECEMBER 19, 2016 GRANTED THE APPLICATION OF 1720 WEST CHESTER PIKE, L.P. PURSUANT TO SECTION 139–42 OF THE WILLISTOWN TOWNSHIP ZONING ORDINANCE IN ORDER TO DEVELOP A 39 UNIT TOWNHOME COMMUNITY PER THE FOLLOWING ORDER:

1. THE APPLICANT IS GRANTED CONDITIONAL USE APPROVAL PURSUANT TO SECTION 139–420F THE ZONING ORDINANCE TO ALLOW THE DEVELOPMENT OF THE PROPERTY WITH A THIRTY–NINE (39) UNIT TOWNHOUSE DEVELOPMENT AS SHOWN ON EXHIBIT A–11 BASED ON THE TESTIMONY AND EXHIBITS PRESENTED DURING THE HEARING ON THIS MATTER.

2. THE APPROVAL AND PERMITTED USE SHALL BE IN SUBSTANTIAL CONFORMITY WITH THE EXHIBITS AND THE TESTIMONY AND EXHIBITS PRESENTED AT THE HEARING ON THE APPLICATION.

3. THE APPLICANT'S APPROVAL SHALL BE SUBJECT TO COMPLIANCE WITH ALL TERMS AND PROVISIONS OF THE ZONING ORDINANCE, AND ALL OTHER TOWNSHIP ORDINANCES AND REGULATIONS, AND IN ADDITION TO THE APPLICABLE REGULATIONS OF GOVERNMENT AGENCIES.

4. ANY FUTURE CHANGE TO THIS CONDITIONAL USE DECISION AS SET FORTH IN THE TESTIMONY AND THE EXHIBITS MADE OF PART OF THE RECORD AND THIS DECISION AND ORDER SHALL REQUIRE FURTHER APPROVAL AS MAY BE REQUIRED BY WILLISTOWN TOWNSHIP.

5. THE AREA OF THE WORINGTON COMMONS PROPERTY CONVEYED TO THE APPLICANT SHALL BE PRESERVED AS OPEN SPACE AND REHABILITATED INCLUDING REMOVING AND/OR TREATING ALL INVASIVE PLANT SPECIES AND VINE ROOT STUBS AND INTRODUCING A REASONABLE QUANTITY OF SUB–STORY SPECIES TO CREATE A VISUALLY ATTRACTIVE WOODED AREA TO BE MAINTAINED AS SUCH AS OPEN SPACE AND FOR PASSIVE RECREATIONAL USES.

6. AT THE TIME OF SUBMISSION OF A LAND DEVELOPMENT APPLICATION, THE APPLICANT SHALL BE REQUIRED TO PROVIDE THE TOWNSHIP WITH A TRAFFIC IMPACT STUDY IN COMPLIANCE WITH THE STANDARDS SET FORTH IN SECTION 123–30.B OF THE SUBDIVISION AND LAND DEVELOPMENT ORDINANCE.

7. THE APPLICANT SHALL EXECUTE AND PROVIDE TO THE TOWNSHIP A RECORDABLE, NOTARIZED COPY OF A MEMORANDUM CONTAINING A METES AND BOUNDS DESCRIPTION OF THE PROPERTY IN QUESTION AND STIPULATING THE TERMS AND CONDITIONS OF THIS APPROVAL AND SHALL CONSENT TO THE RECORDING BY THE TOWNSHIP IN THE OFFICE OF THE RECORDER OF DEEDS OF CHESTER COUNTY WITHIN THIRTY (30) DAYS FOLLOWING EXPIRATION OF THE APPEAL PERIOD.

8. NOTHING CONTAINED IN THIS DECISION AND ORDER SHALL BE CONSTRUED TO ABROGATE OR LIMIT THE OBLIGATION OF THE APPLICANT TO SEEK AND OBTAIN APPROVAL OF THE SUBDIVISION PLAN, ALLOWING CONVEYANCE OF THE PROPERTY.

9. THIS APPROVAL SHALL BE DEEMED NULL AND VOID EIGHTEEN (18) MONTHS FROM THE DATE HEREOF UNLESS CONSTRUCTION HAS HERETOFORE BEEN COMMENCED OR UNLESS, PRIOR TO THE EXPIRATION OF THE EIGHTEEN–MONTH PERIOD, THE BOARD OF SUPERVISORS SHALL GRANT AN EXTENSION FOR CAUSE SHOWN BY THE APPLICANT.

10. THE APPLICANT SHALL EXPRESS TO THE BOARD IN WRITING WITHIN FOURTEEN (14) DAYS OF THE DATE OF THIS DECISION AND ORDER, ITS AGREEMENT TO THE ABOVE CONDITIONS OR THE APPLICATION IS DENIED; THE BOARD EXPRESSLY FINDING AND CONCLUDING THAT THE APPLICATION IN THE ABSENCE OF COMPLIANCE WITH THE SAID CONDITIONS IS INCONSISTENT WITH THE OBJECTIVE CRITERIA SET FORTH IN THE APPLICABLE PROVISIONS OF THE ZONING ORDINANCE.

GENERAL NOTES:

1. BOUNDARY INFORMATION SHOWN IS FROM SIGNED AND SEALED "PLAN OF PROPERTY FOR 1720 W. CHESTER PIKE, L.P." PREPARED BY CHESTER VALLEY ENGINEERS, PROJECT NO. 19998, DATED 8/14/2017 WITH NO REVISION DATE.

2. TOPOGRAPHIC INFORMATION SHOWN IS FROM PHOTOGRAMMETRIC COMPILATION IN MARCH 2004 AND VERIFIED BY CHESTER VALLEY ENGINEERS INC. IN MARCH 2015. ADDITIONAL FIELD SURVEY PERFORMED BY BURSICH ASSOCIATES, INC. IN MAY, 2018.

3. RIGHT OF WAY OF WEST CHESTER PIKE – S.R.0003 IS SHOWN IN ACCORDANCE WITH COMMONWEALTH OF PENNSYLVANIA DEPARTMENT OF HIGHWAYS DRAWINGS FOR CONSTRUCTION AND CONDEMNATION OF RIGHT OF WAY FOR L.R.133, SECTION NO. 11–A APPROVED BY THE GOVERNOR JUNE 27, 1963.

4. HORIZONTAL DATUM: NAD 83 PA SPC SOUTH ZONE

5. VERTICAL DATUM: NAVD 88

6. SITE BENCH MARK: RIM OF SANITARY SEWER MANHOLE LOCATED IN NORTHEAST CORNER OF EXISTING PARKING LOT IN WORINGTON COMMONS, ELEVATION 360.88.

7. THE LOCATION OF ALL EXISTING UTILITIES SHOWN HEREIN HAVE BEEN DEVELOPED FROM UTILITY COMPANY RECORDS OR ABOVE GROUND INSPECTION OF THE SITE. COMPLETENESS OR ACCURACY OF TYPE, SIZE, DEPTH, OR HORIZONTAL OR VERTICAL LOCATION OF UNDERGROUND FACILITIES OR STRUCTURES CANNOT BE GUARANTEED. IT SHALL BE THE CONTRACTOR'S FULL RESPONSIBILITY TO CONTACT THE VARIOUS UTILITY COMPANIES TO LOCATE THEIR FACILITIES PRIOR TO STARTING CONSTRUCTION IN ACCORDANCE WITH PENNSYLVANIA ACT 38 "ONE CALL" SYSTEM. NO EXTRA COMPENSATION WILL BE PAID TO THE CONTRACTOR FOR DAMAGE AND REPAIR TO THESE FACILITIES CAUSED BY THEIR WORKFORCE.

8. BY GRAPHIC PLOTTING ONLY, THE PREMISES SHOWN HEREON DOES NOT LIE WITHIN A SPECIAL FLOOD HAZARD AREA (SFHA). THE PREMISES LIES WITHIN AN AREA DESIGNATED "ZONE X", AREAS DETERMINED TO BE OUTSIDE OF THE 0.2% ANNUAL CHANCE FLOODPLAIN, AS SHOWN ON FEMA FLOOD INSURANCE RATE MAP (FIRM) 42029C0215F, DATED: SEPTEMBER 29, 2006.

9. IN A LETTER DATED JUNE 31, 2016, RUSSELL E. CARLSON, RCA, BMCA, STATED THAT DUE TO BOTH THE NUMBER OF VIABLE TREES AND THE HEALTH OF THE EXISTING VEGETATION THE FORESTED AREA SHOWN HEREON DOES NOT MEET THE CRITERIA AS DEFINED IN THE TOWNSHIP ORDINANCE TO QUALIFY EITHER AS A WOODED LOT OR WOODLAND.

10. THERE ARE NO QUALIFYING AREAS OF VERY STEEP SLOPES, 25% AND GREATER.

11. THE SITE HAS BEEN EXAMINED BY A QUALIFIED PROFESSIONAL AND NO WETLANDS WERE FOUND TO EXIST. A WETLAND INVESTIGATION OF THE SUBJECT SITE WAS CONDUCTED BY DUBOIS ENVIRONMENTAL CONSULTANTS, LLC. AND REPORT ISSUED DATED AUGUST 10, 2017, WHICH DETERMINED THAT WETLANDS AND ENVIRONMENTAL CONSTRAINTS DUE TO THE PROXIMITY OF WETLANDS ARE ABSENT FROM THE SITE AND VICINITY.

12. SOILS INFORMATION SHOWN FROM INFORMATION CONTAINED ON THE USDA – NRCS WEB SOIL SURVEY.

13. IT IS NOT THE INTENT OF THIS PLAN TO ILLUSTRATE ANY SUBSURFACE CONDITIONS SHOULD THEY EXIST, I.E. BURIED TANKS, SEEPAGE BEDS, TILE FIELDS, ETC.

14. ALL PROPOSED UTILITIES SHALL BE PLACED UNDERGROUND. INSTALLATION OF ALL UTILITIES SHALL BE STRICT ACCORDANCE WITH THE ENGINEERING STANDARDS AND SPECIFICATIONS OF THE TOWNSHIP, AUTHORITY, OR OTHER PUBLIC UTILITY CONCERNED.

15. THE HOMEOWNERS ASSOCIATION (HOA) SHALL BE RESPONSIBLE FOR THE PERPETUAL MAINTENANCE OF THE STORMWATER MANAGEMENT FACILITIES AND BEST MANAGEMENT PRACTICES (BMPS) LOCATED ON THE SITE. NO CHANGES SHALL BE MADE TO THE FACILITIES, PIPES, STRUCTURES, OR FINISHED GRADING WITHOUT PRIOR WRITTEN APPROVAL FROM THE MUNICIPALITY AND ANY APPLICABLE GOVERNMENTAL REGULATORY AGENCIES.

    REPRESENTATIVES OF WILLISTOWN TOWNSHIP AND/OR OTHER APPLICABLE GOVERNMENTAL AGENCIES SHALL HAVE THE PERMISSION TO ACCESS THE STORMWATER MANAGEMENT FACILITIES THROUGH A BLANKET EASEMENT OVER THE SUBJECT PROPERTY TO ALLOW ENTRY TO PERFORM INSPECTIONS, AND TO ALLOW ENTRY AND EXECUTION OF ALL NECESSARY REPAIRS TO THE FACILITIES SHOULD THE HOA FAIL TO MAINTAIN THE FACILITIES IN ACCORDANCE WITH THE APPROVED PLAN.

16. THE HOMEOWNERS ASSOCIATION (HOA) WILL BE RESPONSIBLE FOR THE MAINTENANCE OF THE PRIVATE ACCESS DRIVES, DEDICATED STRIPED PARKING STALLS, CURBING, LIGHTING (IF PROVIDED), STREET SIGNAGE, WALKS AND WALKING TRAIL, OPEN SPACES, EMERGENCY ACCESS, AND STORMWATER MANAGEMENT FACILITIES.

17. THE PROPOSED INTERNAL ACCESS DRIVES ARE PRIVATE AND ARE NOT OFFERED FOR DEDICATION TO THE TOWNSHIP.

18. THE HOMEOWNERS ASSOCIATION (HOA) IS RESPONSIBLE FOR SOLID WASTE STORAGE AND DISPOSAL.

19. PUBLIC WATER SERVICE IS TO BE PROVIDED BY AQUA, PA. ALL WATER FACILITIES AND CONSTRUCTION SHALL BE DONE IN ACCORDANCE WITH THEIR STANDARDS AND SPECIFICATIONS.

20. PUBLIC SEWER IS TO BE PROVIDED BY AQUA, PA. THE SITE IS INTENDED TO BE SERVICED BY GRAVITY SEWER. ALL SANITARY SEWER FACILITIES AND CONSTRUCTION SHALL BE DONE IN ACCORDANCE WITH THEIR STANDARDS AND SPECIFICATIONS

21. ALL WORK SHALL BE PERFORMED IN ACCORDANCE WITH THESE PLANS AND SPECIFICATIONS AND THE REQUIREMENTS OF THE APPLICABLE STANDARDS OF THE LOCAL GOVERNING AUTHORITY.

22. UNLESS NOTED OTHERWISE ON THE PLANS OR IN THE PERMITS GOVERNING THE WORK, ALL CONSTRUCTION AND MATERIALS SHALL BE IN ACCORDANCE WITH THE FOLLOWING APPROPRIATE STANDARDS AND SPECIFICATIONS:

    A. WILLISTOWN TOWNSHIP SUBDIVISION AND LAND DEVELOPMENT ORDINANCE AND AMENDMENTS.

    B. PENNDOT PUBLICATION 408 SPECIFICATIONS, LATEST EDITION AND ALL ADDENDA.

23. PARKING IS PROHIBITED ALONG THE PRIVATE ACCESS DRIVES, EXCEPT WITHIN DEDICATED STRIPED PARKING STALLS.

24. ALL SIGNS SHALL COMPLY WITH ARTICLE XVIII – SIGNS OF THE WILLISTOWN TOWNSHIP ZONING ORDINANCE.

25. CONCRETE MONUMENTS SHALL BE SET AT THE INTERSECTION OF ALL LINES FORMING ANGLES AND AT CHANGES IN DIRECTION OF LINES IN THE BOUNDARY (PERIMETER) OF THE PROPERTY BEING SUBDIVIDED, ALONG THE RIGHT OF WAY OF ALL STREETS. MONUMENTS SHALL BE OF CONCRETE OR STONE A MINIMUM OF 6'X6"X30"OR AS APPROVED BY THE TOWNSHIP ENGINEER. THEY SHALL BE PLACED SO THAT THE SCORED MARKED POINT SHALL COINCIDE EXACTLY WITH THE INTERSECTION OF LINES, PURSUANT TO SECTION 123–36. MONUMENTS SHALL BE SET AT THE LOCATIONS SHOWN ON THE PLAN.

26. RETAINING WALLS 4 FEET OR GREATER IN HEIGHT SHALL BE DESIGNED BY A PROFESSIONAL ENGINEER LICENSED IN THE COMMONWEALTH OF PENNSYLVANIA, WITH SEAL AND SIGNATURE APPEARING ON THE FINAL DESIGN. CONSTRUCTION DRAWINGS AND SUPPORTING CALCULATIONS SHALL BE PROVIDED TO THE MUNICIPAL ENGINEER FOR REVIEW AND APPROVAL PRIOR TO CONSTRUCTION OF THE WALLS.

27. ALL TRAFFIC CONTROL SIGNS SHALL BE POSTED IN ACCORDANCE WITH THE MOST CURRENT VERSIONS OF THE MUTCD AND PENNDOT PUBLICATION 236M, "HANDBOOK OF APPROVED SIGNS".

28. PAVEMENT MARKINGS SHALL BE IN ACCORDANCE WITH MUTC AND PENNDOT PUBLICATION 111M "TRAFFIC CONTROL – PAVEMENT MARKINGS AND SIGNING STANDARDS".

29. THIS PLAN IS PREPARED FOR LAND DEVELOPMENT PURPOSES ONLY. ADDITIONAL DATA MAY BE NECESSARY FOR CONSTRUCTION.

30. THE PROPOSED DWELLING UNITS DEPICTED ON THE PLANS ARE SUBJECT TO ALL APPLICABLE TOWNSHIP ORDINANCES AND REGULATION. INDIVIDUAL UNITS AND BUILDING FOOTPRINTS ARE APPROXIMATE. FINAL BUILDING FOOTPRINTS AND ELEVATIONS WILL BE SUBMITTED DURING THE BUILDING PERMIT APPLICATION PHASE AS DETERMINED AT THE TIME OF INDIVIDUAL UNIT SALES. THE MAXIMUM BUILDING AREA COVERAGE FOR ALL 39 UNITS IS 65,633 SF.

31. CONTRACTOR SHALL VERIFY THAT ALL RAMPS AND SIDEWALKS MEET ADA REQUIREMENTS AND CODES PRIOR TO POURING OF CONCRETE. IF ANY DISCREPANCIES ARE FOUND, THE CONTRACTOR SHOULD NOTIFY THE ENGINEER OF RECORD IMMEDIATELY.

32. ALL DIMENSIONS AND GRADES SHOWN ON THE PLANS SHALL BE FIELD VERIFIED BY THE CONTRACTOR PRIOR CONSTRUCTION. CONTRACTOR SHALL NOTIFY OWNER OR BURSICH ASSOCIATES, INC. IF ANY DISCREPANCIES EXIST PRIOR TO PROCEEDING WITH CONSTRUCTION FOR NECESSARY PLAN OR GRADE CHANGES. NO EXTRA COMPENSATION SHALL BE PROVIDED TO THE CONTRACTOR FOR WORK HAVING TO BE REDONE DUE TO DIMENSIONS OR GRADE SHOWN INCORRECTLY ON THESE PLANS IF SUCH NOTIFICATION HAS NOT BEEN GIVEN. ENGINEER RESERVES THE RIGHT TO CORRECT THESE DRAWINGS.

33. DEBRIS SHALL NOT BE BURIED ON THE SITE. ALL EXCAVATED MATERIAL AND DEBRIS (SOLID WASTE) SHALL BE DISPOSED OF IN ACCORDANCE WITH ALL LOCAL, COUNTY, STATE, AND FEDERAL LAWS AND APPLICABLE CODES. CONTRACTOR SHALL PROPERLY REMOVE AND DISPOSE HAZARDOUS/UNSUITABLE MATERIAL OFF–SITE IN ACCORDANCE WITH ALL APPLICABLE CODES, ORDINANCES, AND LAWS.

34. THE CONTRACTOR SHALL BE RESPONSIBLE FOR ALL SHORING REQUIRED DURING EXCAVATION AND SHALL BE PERFORMED IN ACCORDANCE WITH CURRENT OSHA STANDARDS, AS WELL AS ADDITIONAL PROVISIONS TO ASSURE STABILITY OF CONTIGUOUS STRUCTURES, AS FIELD CONDITIONS DICTATE.

35. CONTRACTOR SHALL EXERCISE EXTREME CARE WHEN PERFORMING ANY WORK ACTIVITIES ADJACENT TO PAVEMENT, STRUCTURE, ETC. TO REMAIN. CONTRACTOR SHALL BE RESPONSIBLE FOR TAKING THE APPROPRIATE MEASURES AS NECESSARY TO ENSURE THE STRUCTURAL STABILITY OF PAVEMENT AND SIDEWALKS TO REMAIN, AND PROVIDE A SAFE WORK AREA.

36. IT SHALL BE THE RESPONSIBILITY OF THE CONTRACTOR TO NOTIFY THE LOCAL AUTHORITY OR GOVERNING AGENCIES OF THE BEGINNING DATE OF CONSTRUCTION AND IS SHALL BE THE RESPONSIBILITY OF THE CONTRACTOR TO SEE THAT NO WORK IS DONE WITHOUT THE PROPER INSPECTIONS BY LOCAL AUTHORITY OR GOVERNING AGENCIES.

37. THE ENGINEER IS NOT RESPONSIBLE FOR CONSTRUCTION METHODS /MEANS FOR COMPLETION OF THE WORK DEPICTED ON THESE PLANS, NOR ANY CONFLICTS/SCOPE REVISIONS WHICH RESULT FROM THE SAME. THE CONTRACTOR IS RESPONSIBLE FOR DETERMINING METHODS/MEANS FOR COMPLETION OF IDENTIFIED WORK PRIOR TO THE COMMENCEMENT OF CONSTRUCTION AND NOTIFICATION OF OWNER AND ENGINEER OF RECORD WHEN A CONFLICT IS IDENTIFIED.

38. A PLOT PLAN SHALL BE SUBMITTED FOR EACH INDIVIDUAL DWELLING UNIT AT THE TIME OF BUILDING PERMIT APPLICATION REQUEST DEPICTING THE LOCATION OF EACH UNIT TO BE CONVEYED DESCRIBED BY BEARINGS AND DISTANCES TIED TO THE PARCEL BOUNDARY. EACH PLOT PLAN SHALL BE RECORDED PRIOR TO CONVEYANCE OF THE DWELLING UNIT.

39. MONITORING, AND COMPACTION VERIFICATION FOR ALL SITE FILL PLACEMENT SHALL BE COMPLETED BY THE APPLICANT'S GEOTECHNICAL ENGINEER.

41. CONSIDERATION SHALL BE GIVEN TO INSTALLING WALKING TRAILS WHERE POSSIBLE DURING THE COURSE OF CONSTRUCTION. BUT ALL SHALL BE INSTALLED DURING THE PROJECT PRIOR TO THE ISSUANCE OF THE OCCUPANCY PERMIT OF THE FINAL UNIT.

© COPYRIGHT BURSICH ASSOCIATES, INC. 2018
ALL REPORTS, DOCUMENTS, SPECIFICATIONS, COMPUTER FILES, FIELD DATA, NOTES AND OTHER DOCUMENTS AND INSTRUMENTS PREPARED BY BURSICH ASSOCIATES, INC. AS INSTRUMENTS OF SERVICE SHALL REMAIN THE PROPERTY OF BURSICH ASSOCIATES, INC. AND THEREFORE SHALL RETAIN ALL COMMON LAW, STATUTORY AND OTHER RESERVED RIGHTS, INCLUDING THE COPYRIGHT THERETO. ANY USE, REUSE OR MODIFICATION/ALTERATION AND REPRODUCTION WITHOUT THE EXPRESS WRITTEN CONSENT OF BURSICH ASSOCIATES, INC. IS STRICTLY PROHIBITED. ANY USE, REUSE OR MODIFICATION/ALTERATION BY ANYONE WITHOUT WRITTEN CONSENT SHALL BE DEEMED AN AGREEMENT BETWEEN THE USER AND BURSICH ASSOCIATES, INC. WHICH SHALL INDEMNIFY AND SAVE HARMLESS BURSICH ASSOCIATES, INC. FOR ALL CLAIMS, DAMAGES, LOSSES AND EXPENSES ARISING FROM THE USE THEREFROM.

NO.	REVISION	DATE	BY
2	REVISED PER TOWNSHIP REVIEW LETTER DATED 12/11/18	1/30/19	BG
1	REVISED PER TOWNSHIP REVIEW LETTERS DATED 9/13/18 & 10/26/18	11/5/18	BG

SEAL

NORTH

MANAGER NF	
DESIGN KK	CHKD. BY
DRAFT BG	CHKD. BY
FILE ROU–01	DATE 8/9/2018
NOTES	SCALE NONE

BURSICH
Sharing your Vision

Corporate Headquarters
2129 East High Street
Pottstown, PA 19464
610–323–4040

Southampton Office
706 Lakeside Drive
Southampton, PA 18966

w w w . b u r s i c h . c o m

CLIENT
ROUSE/CHAMBERLIN, LTD
500 EXTON COMMONS
EXTON, PA 19341

SUBJECT
PROJECT NOTES – RECORD SHEET 3 OF 6

PRESERVE AT WILLISTOWN

WILLISTOWN TOWNSHIP, CHESTER COUNTY, PENNSYLVANIA

JOB NO. 187872

SHEET NO. 5 OF 26

DWG. NO. PN187872

P:\ROU–01\187872–00\dwg\LD_Plan\PN187872.dwg

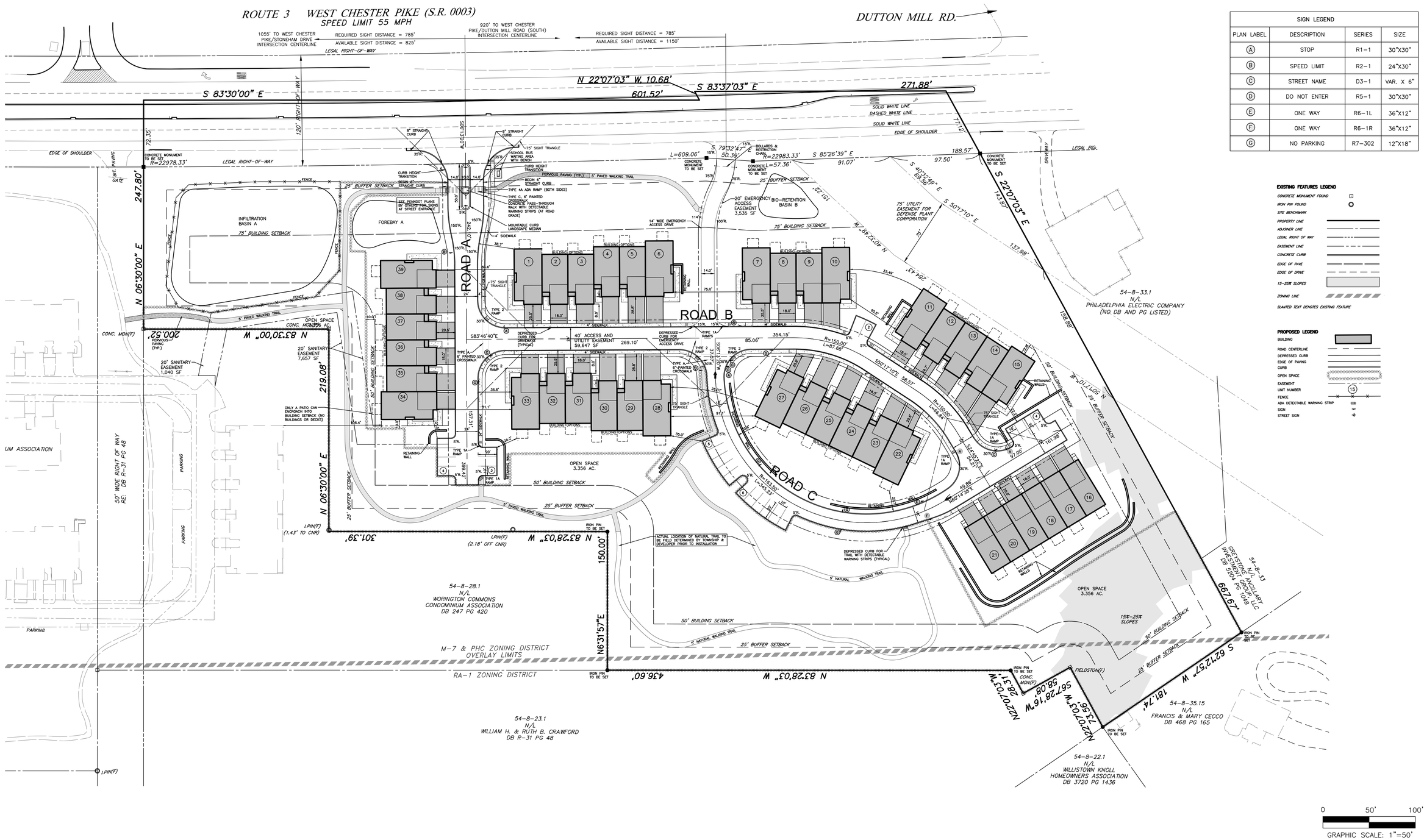

SIGN LEGEND			
PLAN LABEL	DESCRIPTION	SERIES	SIZE
A	STOP	R1-1	30"X30"
B	SPEED LIMIT	R2-1	24"X30"
C	STREET NAME	D3-1	VAR. X 6"
D	DO NOT ENTER	R5-1	30"X30"
E	ONE WAY	R6-1L	36"X12"
F	ONE WAY	R6-1R	36"X12"
G	NO PARKING	R7-302	12"X18"

EXISTING FEATURES LEGEND

CONCRETE MONUMENT FOUND
IRON PIN FOUND
SITE BENCHMARK
PROPERTY LINE
ADJOINER LINE
LEGAL RIGHT OF WAY
EASEMENT LINE
CONCRETE CURB
EDGE OF PAVE
EDGE OF DRIVE
15-25% SLOPES
ZONING LINE
SLANTED TEXT DENOTES EXISTING FEATURE

PROPOSED LEGEND

BUILDING
ROAD CENTERLINE
DEPRESSED CURB
EDGE OF PAVING
CURB
OPEN SPACE
EASEMENT
UNIT NUMBER
FENCE
ADA DETECTABLE WARNING STRIP
SIGN
STREET SIGN

© COPYRIGHT BURSICH ASSOCIATES, INC. 2018
THE PLANS, SPECIFICATIONS, REPORTS, DATA, NOTES AND OTHER DOCUMENTS AND INSTRUMENTS PREPARED BY BURSICH ASSOCIATES, INC. AS INSTRUMENTS OF SERVICE SHALL REMAIN THE PROPERTY OF BURSICH ASSOCIATES, INC. AND THEREFORE SHALL RETAIN ALL COMMON LAW, STATUTORY AND OTHER RESERVED RIGHTS, INCLUDING COPYRIGHT. THE DOCUMENTS PREPARED BY BURSICH ASSOCIATES, INC. FOR THIS PROJECT ARE NOT TO BE USED BY OTHERS ON OTHER PROJECTS, FOR ADDITIONS TO THIS PROJECT OR OTHER PROJECTS WITHOUT THE EXPRESS WRITTEN CONSENT OF BURSICH ASSOCIATES, INC. IS STRICTLY PROHIBITED. ANY USE, REUSE OR MODIFICATION WITHOUT WRITTEN VERIFICATION OR ADAPTATION BY BURSICH ASSOCIATES, INC. SHALL BE AT THE USER'S SOLE RISK AND WITHOUT LIABILITY OR LEGAL EXPOSURE TO BURSICH ASSOCIATES, INC. THE USER AND BURSICH ASSOCIATES, INC. WHICH SHALL INDEMNIFY AND SAVE HARMLESS BURSICH ASSOCIATES, INC. FOR ALL CLAIMS, DAMAGES, LOSSES AND EXPENSES ARISING FROM THE USE THEREFROM.

NO.	REVISION	DATE	BY
2	REVISED PER TOWNSHIP REVIEW LETTER DATED 12/11/18	1/30/19	BG
1	REVISED PER TOWNSHIP REVIEW LETTERS DATED 9/13/18 & 10/26/18	11/5/18	BG

SEAL

NORTH

MANAGER NF	
DESIGN KK	CHKD. BY
DRAFT BG	CHKD. BY
FILE ROU-01	DATE 8/9/2018
NOTES	SCALE 1"=50'

BURSICH
Sharing your Vision

Corporate Headquarters
2129 East High Street
Pottstown, PA 19464
610-323-4040

Southampton Office
706 Lakeside Drive
Southampton, PA 18966

www.bursich.com

CLIENT
ROUSE/CHAMBERLIN, LTD
500 EXTON COMMONS
EXTON, PA 19341

SUBJECT
OVERALL SITE PLAN – RECORD SHEET 4 OF 6

PRESERVE AT WILLISTOWN

WILLISTOWN TOWNSHIP, CHESTER COUNTY, PENNSYLVANIA

JOB NO. 187872
SHEET NO. 6 OF 26
DWG. NO. SP187872

P:\ROU-01\187872-00\dwg\LD_Plan\SP187872.dwg

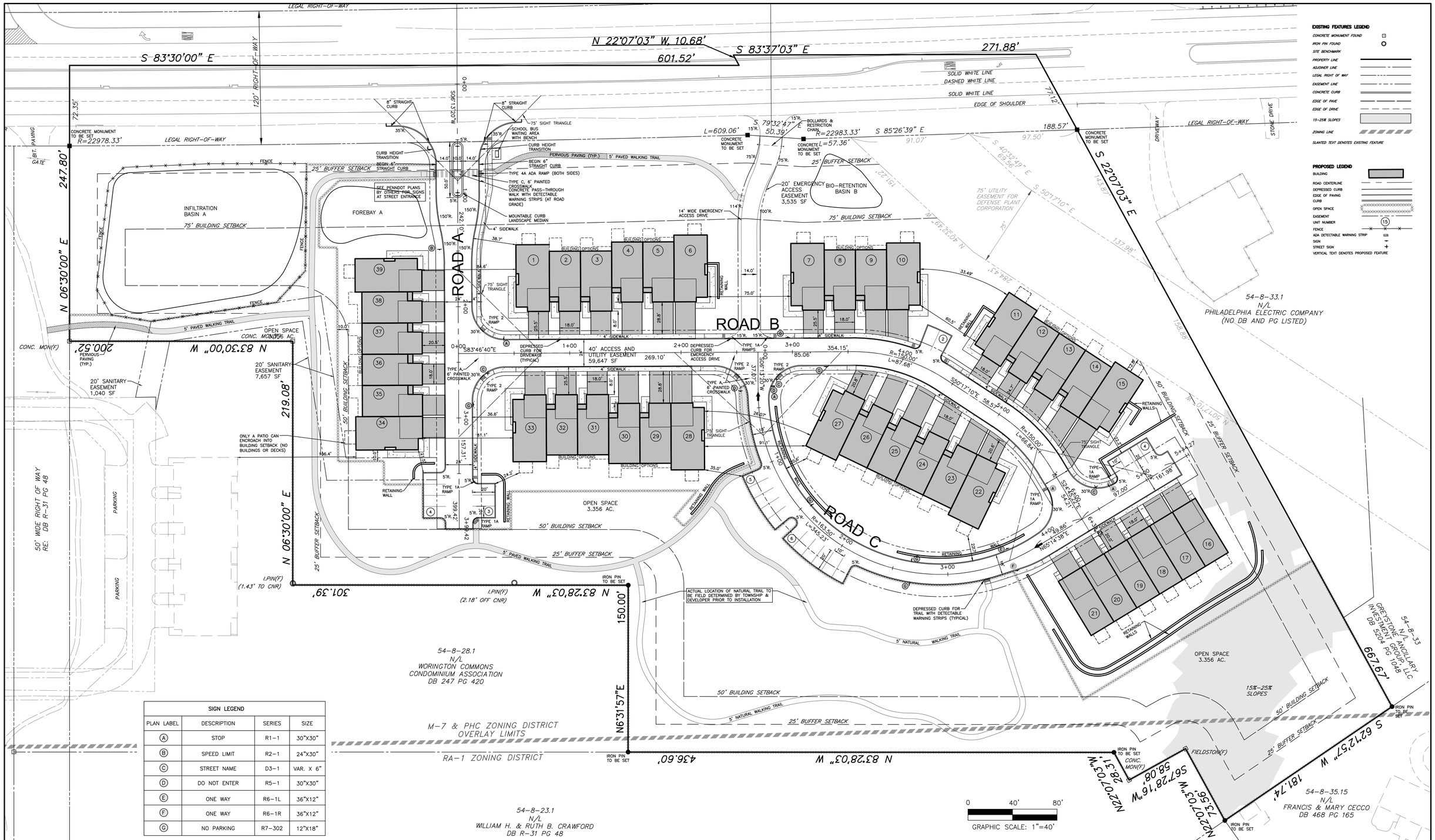

SIGN LEGEND			
PLAN LABEL	DESCRIPTION	SERIES	SIZE
A	STOP	R1-1	30"X30"
B	SPEED LIMIT	R2-1	24"X30"
C	STREET NAME	D3-1	VAR. X 6"
D	DO NOT ENTER	R5-1	30"X30"
E	ONE WAY	R6-1L	36"X12"
F	ONE WAY	R6-1R	36"X12"
G	NO PARKING	R7-302	12"X18"

NO.	REVISION	DATE	BY
2	REVISED PER TOWNSHIP REVIEW LETTER DATED 12/11/18	1/30/19	BG
1	REVISED PER TOWNSHIP REVIEW LETTERS DATED 9/13/18 & 10/26/18	11/5/18	BG

SEAL

NORTH

MANAGER NF	
DESIGN KK	CHKD. BY
DRAFT BG	CHKD. BY
FILE ROU-01	DATE 8/9/2018
NOTES	SCALE 1"=40'

BURSICH
Sharing your Vision

Corporate Headquarters
2129 East High Street
Pottstown, PA 19464
610-323-4040

Southampton Office
706 Lakeside Drive
Southampton, PA 18966

www.bursich.com

CLIENT
ROUSE/CHAMBERLIN, LTD
500 EXTON COMMONS
EXTON, PA 19341

SUBJECT
SITE PLAN – RECORD SHEET 5 OF 6

PRESERVE AT WILLISTOWN

WILLISTOWN TOWNSHIP, CHESTER COUNTY, PENNSYLVANIA

JOB NO. 187872

SHEET NO. 7 OF 26

DWG. NO. SP287872

© COPYRIGHT BURSICH ASSOCIATES, INC., 2018
THE PLANS, SPECIFICATIONS, DRAWINGS, CALCULATIONS, FIELD NOTES AND OTHER DOCUMENTS AND INSTRUMENTS PREPARED BY BURSICH ASSOCIATES, INC. AS INSTRUMENTS OF SERVICE SHALL REMAIN THE PROPERTY OF BURSICH ASSOCIATES, INC. AND THEREFORE SHALL RETAIN ALL COMMON LAW, STATUTORY AND OTHER RESERVED RIGHTS, INCLUDING THE COPYRIGHT THEREIN. THE REPRODUCTION, ALTERATION OR REPUBLICATION OF THESE DOCUMENTS WITHOUT THE EXPRESS WRITTEN CONSENT OF BURSICH ASSOCIATES, INC. IS STRICTLY PROHIBITED. ANY USE, REUSE OR REPUBLICATION WITHOUT WRITTEN CONSENT OF BURSICH ASSOCIATES, INC. SHALL BE AT THE USER'S SOLE RISK AND THE USER AND BURSICH ASSOCIATES, INC. WHICH SHALL INDEMNIFY AND SAVE HARMLESS BURSICH ASSOCIATES, INC. FOR ALL CLAIMS, DAMAGES, LOSSES AND EXPENSES ARISING FROM THE USE THEREFROM.

P:\ROU-01\187872-00\dwg\LD_Plan\SP187872.dwg

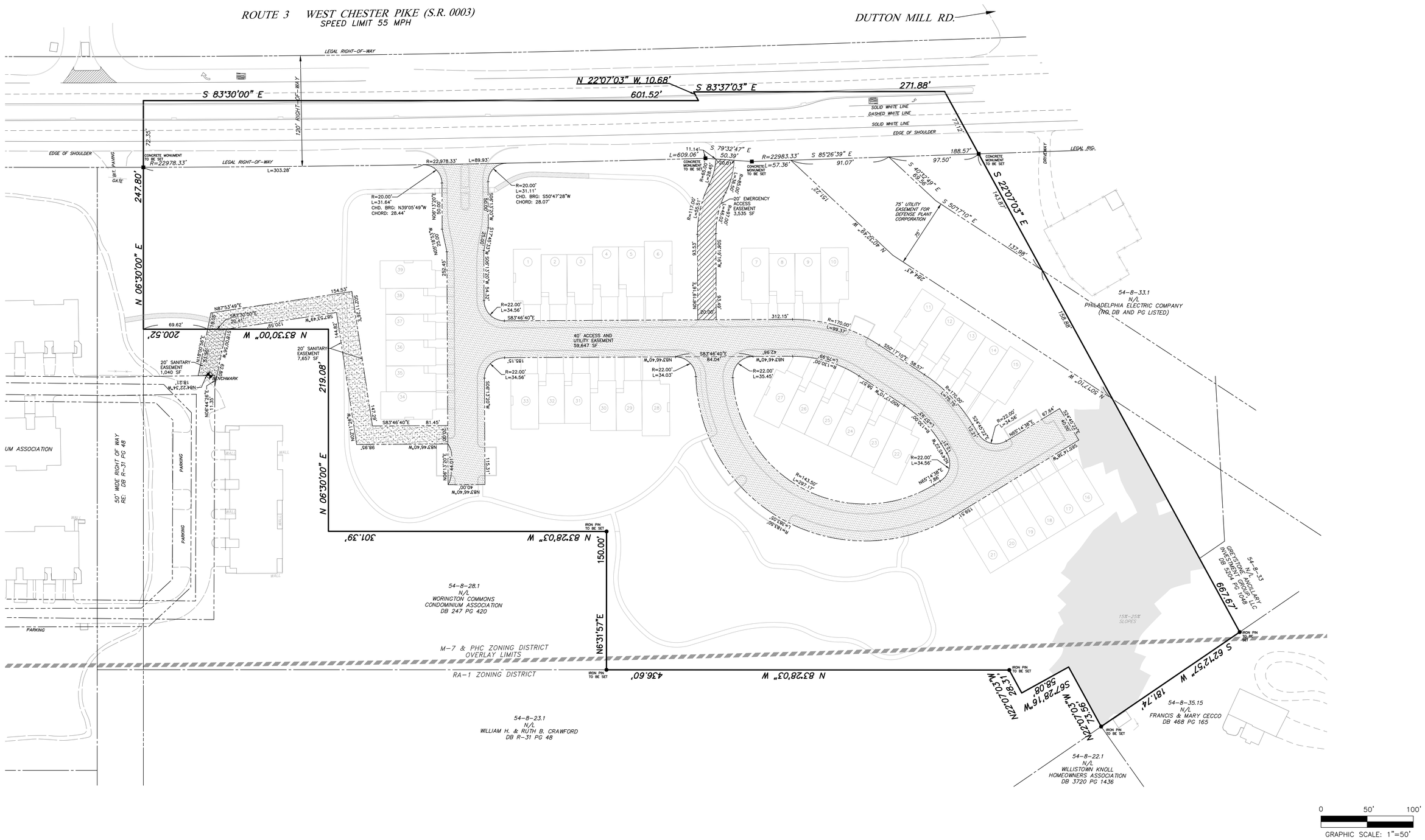

© COPYRIGHT BURSICH ASSOCIATES, INC., 2018
THIS PLAN, ALONG WITH ALL OTHER PLANS, NOTES AND OTHER DOCUMENTS AND INSTRUMENTS PREPARED BY BURSICH ASSOCIATES, INC. AS INSTRUMENTS OF SERVICE SHALL REMAIN THE PROPERTY OF BURSICH ASSOCIATES, INC. AND THEREFORE SHALL RETAIN ALL COMMON LAW, STATUTORY AND OTHER RESERVED RIGHTS, INCLUDING THE COPYRIGHT THEREIN. THE PLAN, NOTES AND OTHER DOCUMENTS AND INSTRUMENTS WITHOUT THE EXPRESS WRITTEN CONSENT OF BURSICH ASSOCIATES, INC. IS STRICTLY PROHIBITED. ANY USE, REUSE OR ALTERATION WITHOUT SUCH CONSENT WILL BE ACCEPTED AT THE USER'S SOLE RISK AND WITHOUT LIABILITY TO THE USER AND BURSICH ASSOCIATES, INC. WHICH SHALL INDEMNIFY AND SAVE HARMLESS BURSICH ASSOCIATES, INC. FOR ALL CLAIMS, DAMAGES, LOSSES AND EXPENSES ARISING FROM THE USE THEREFROM.

NO.	REVISION	DATE	BY
2	REVISED PER TOWNSHIP REVIEW LETTER DATED 12/11/18	1/30/19	BG
1	REVISED PER TOWNSHIP REVIEW LETTERS DATED 9/13/18 & 10/26/18	11/5/18	BG

SEAL

NORTH

MANAGER NF	
DESIGN KK	CHKD. BY
DRAFT BG	CHKD. BY
FILE ROU-01	DATE 8/9/2018
NOTES	SCALE 1"=50'

BURSICH
Sharing your Vision

Corporate Headquarters
2129 East High Street
Pottstown, PA 19464
610-323-4040

Southampton Office
706 Lakeside Drive
Southampton, PA 18966

www.bursich.com

CLIENT
ROUSE/CHAMBERLIN, LTD
500 EXTON COMMONS
EXTON, PA 19341

SUBJECT
EASEMENT PLAN – RECORD PLAN 6 OF 6

PRESERVE AT WILLISTOWN

WILLISTOWN TOWNSHIP, CHESTER COUNTY, PENNSYLVANIA

JOB NO. 187872
SHEET NO. 8 OF 26
DWG. NO. EA187872

P:\ROU-01\187872-00\dwg\LD_Plan\EA187872.dwg

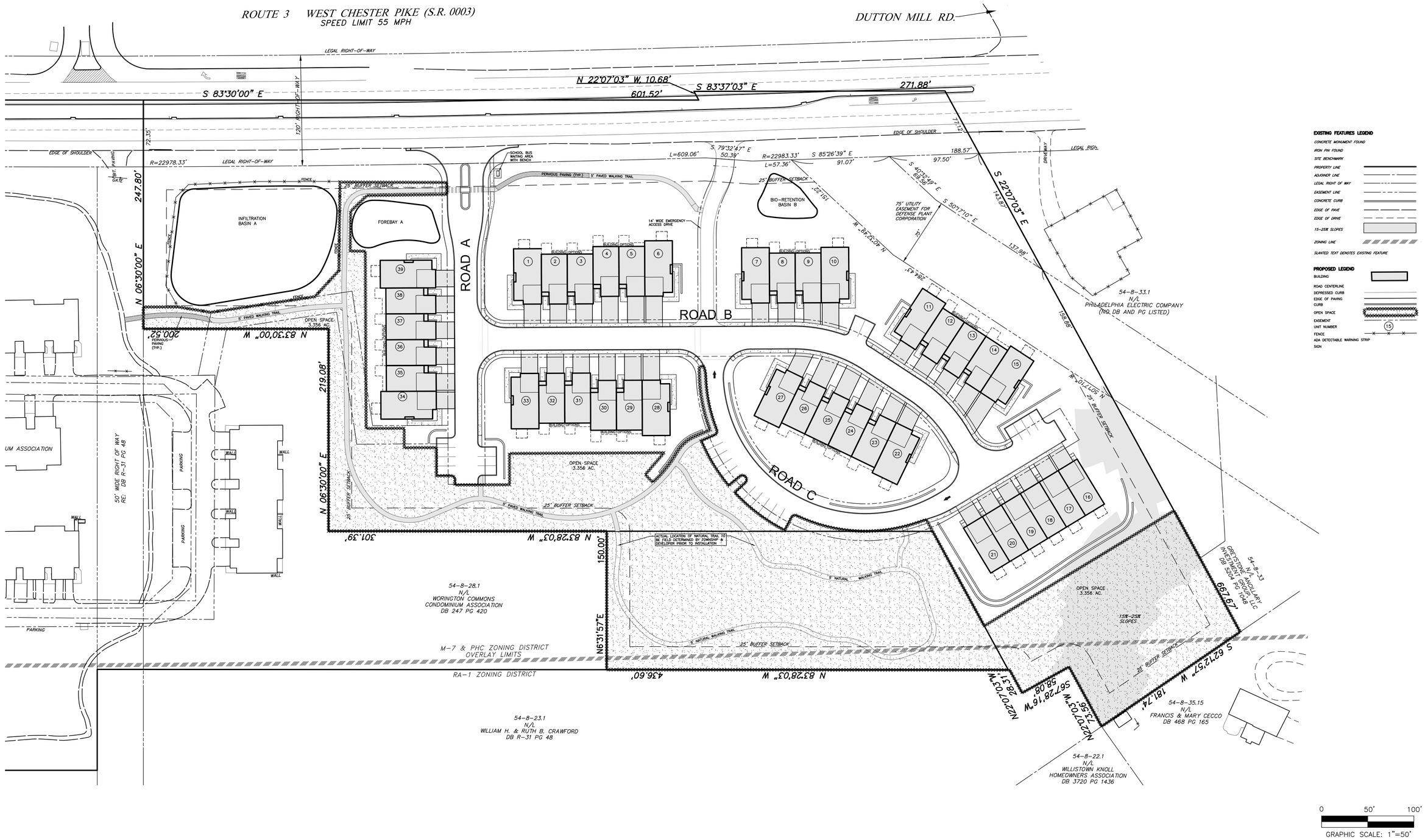

© COPYRIGHT BURSICH ASSOCIATES, INC. 2018
THE PLANS, SPECIFICATIONS, REPORTS, RECORDS, DATA, WATER AND OTHER DOCUMENTS AND INSTRUMENTS PROVIDED BY BURSICH ASSOCIATES, INC. (BAI) AS INSTRUMENTS OF SERVICE SHALL REMAIN THE PROPERTY OF BURSICH ASSOCIATES, INC. AND THEREFORE SHALL RETAIN ALL COMMON LAW, STATUTORY AND OTHER RESERVED RIGHTS, INCLUDING THE COPYRIGHT THEREIN. THE PROJECT OWNER AGREES TO RETAIN BAI'S RIGHTS AND TO REPRODUCE WITHOUT THE EXPRESS WRITTEN CONSENT OF BURSICH ASSOCIATES, INC. IS STRICTLY PROHIBITED. ANY USE, REUSE OR MODIFICATION TO THE PLANS, SPECIFICATIONS, REPORTS, RECORDS, DATA AND OTHER DOCUMENTS AND INSTRUMENTS BY THE USER AND BURSICH ASSOCIATES, INC. WHICH SHALL INDEMNIFY AND SAVE HARMLESS BURSICH ASSOCIATES, INC. FOR ALL CLAIMS, DAMAGES, LOSSES AND EXPENSES ARISING FROM THE USE THEREFROM.

NO.	REVISION	DATE	BY
2	REVISED PER TOWNSHIP REVIEW LETTER DATED 12/11/18	1/30/19	BG
1	REVISED PER TOWNSHIP REVIEW LETTERS DATED 9/13/18 & 10/26/18	11/5/18	BG

SEAL

NORTH

MANAGER NF	
DESIGN KK	CHKD. BY
DRAFT BG	CHKD. BY
FILE ROU-01	DATE 8/9/2018
NOTES	SCALE 1"=50'

BURSICH
Sharing your Vision

Corporate Headquarters
2129 East High Street
Pottstown, PA 19464
610-323-4040

Southampton Office
706 Lakeside Drive
Southampton, PA 18966

www.bursich.com

CLIENT
ROUSE/CHAMBERLIN, LTD
500 EXTON COMMONS
EXTON, PA 19341

SUBJECT
OPEN SPACE PLAN

PRESERVE AT WILLISTOWN

WILLISTOWN TOWNSHIP, CHESTER COUNTY, PENNSYLVANIA

JOB NO. 187872
SHEET NO. 9 OF 26
DWG. NO. OP187872

P:\ROU-01\187872-00\dwg\LD_Plan\OP187872.dwg

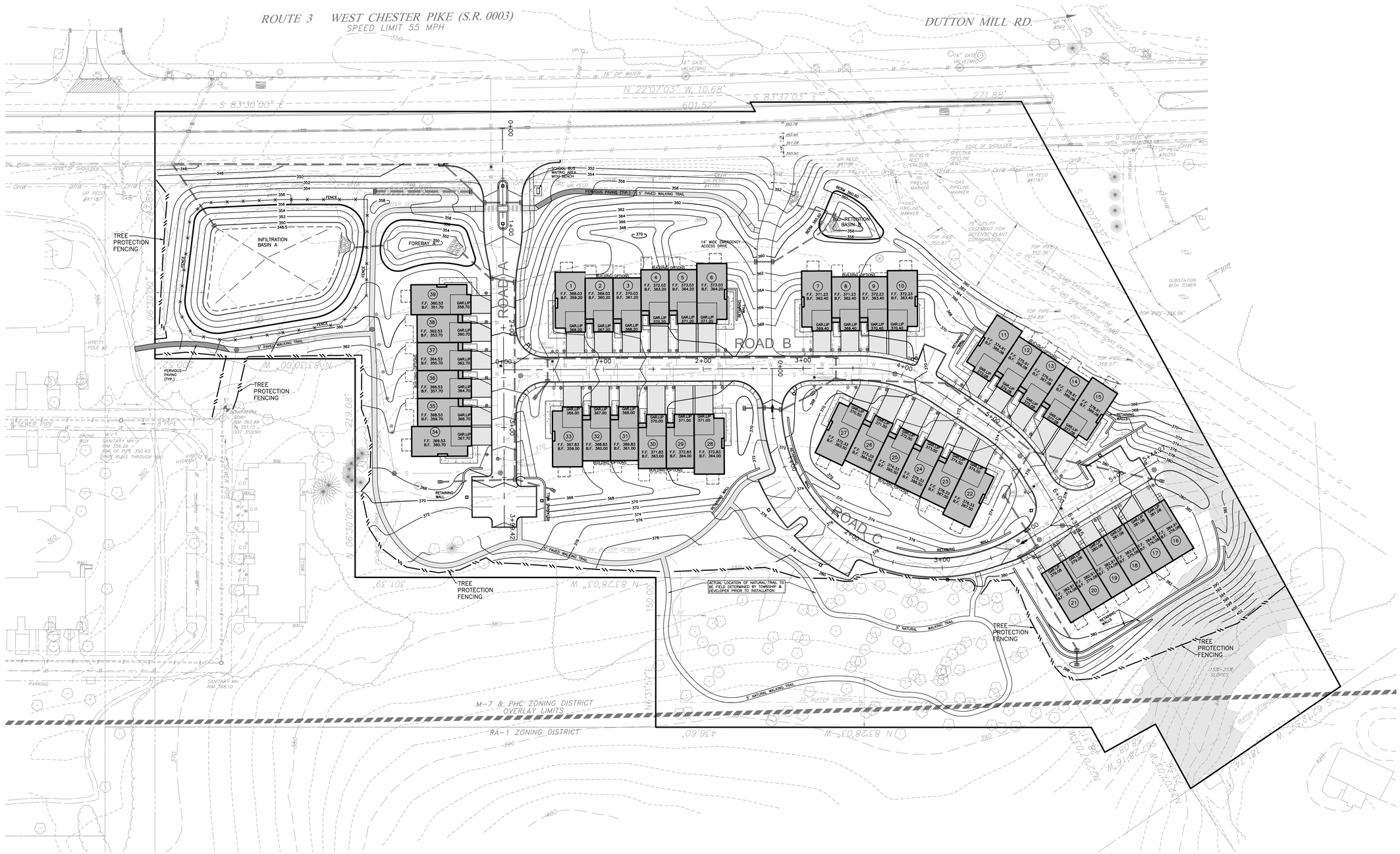

EXISTING FEATURES LEGEND

SITE BENCHMARK
PROPERTY LINE
ADJOINER LINE
LEGAL RIGHT OF WAY
EASEMENT LINE
CONCRETE CURB
EDGE OF PAVE
EDGE OF DRIVE
CONTOURS — 372 — 370
SPOT ELEVATION ×300.0
WOOD LINE
TREES
SANITARY SEWER MAIN — S —
SANITARY SEWER CLEANOUT
SANITARY SEWER MANHOLE
STORM SEWER
MARC TYPE INLETS
WATER MAIN — W —
FIRE HYDRANT
WATER VALVE
WATER MANHOLE
GAS MAIN — G —
GAS VALVE
OVERHEAD WIRES — OHW —
UNDERGROUND WIRES — UGW —
UTILITY POLE
SIGN
15-25% SLOPES
ZONING LINE
SLANTED TEXT DENOTES EXISTING FEATURE

PROPOSED LEGEND

BUILDING
ROAD CENTERLINE
DEPRESSED CURB
EDGE OF PAVING
CURB
SEWER MAIN — S —
SEWER SERVICE LATERAL — L —
SANITARY SEWER MANHOLE
SANITARY SEWER CLEANOUT
SANITARY SEWER STRUCTURE IDENTIFIER
STORMWATER PIPE
C&M TYPE STORMWATER INLET
HEADWALL/ENDWALL
RIP-RAP APRON
STORMWATER MANHOLE
STORMWATER STRUCTURE IDENTIFIER A,21
WATER MAIN — W —
WATER SERVICE LATERAL — WS —
WATER GATE VALVE
WATER SERVICE SHUTOFF
FIRE HYDRANT
SPOT ELEVATION 368.55
INTERMEDIATE CONTOUR — 362 —
INDEX CONTOUR — 360 —
DIRECTION OF FLOW
WOODS LINE
UNIT NUMBER 15
FENCE
TREE PROTECTION FENCING
ADA DETECTABLE WARNING STRIP
STREET LIGHT
VERTICAL TEXT DENOTES PROPOSED FEATURE

SEE SHEET 5 FOR GRADING & UTILITY GENERAL NOTES

0 50' 100'
GRAPHIC SCALE: 1"=50'

© COPYRIGHT BURSICH ASSOCIATES, INC., 2018
THE PLANS, SPECIFICATIONS, REPORTS, PROGRAMS, PLATS, DATA, NOTES AND OTHER DOCUMENTS AND INSTRUMENTS PREPARED BY BURSICH ASSOCIATES, INC. AS INSTRUMENTS OF SERVICE SHALL REMAIN THE PROPERTY OF BURSICH ASSOCIATES, INC. AND THEREFORE SHALL RETAIN ALL COMMON LAW, STATUTORY AND OTHER RESERVED RIGHTS, INCLUDING THE COPYRIGHT THERETO. THE REPRODUCTION, ALTERATION, DISTRIBUTION OR USE OF THESE DOCUMENTS WITHOUT THE EXPRESS WRITTEN CONSENT OF BURSICH ASSOCIATES, INC. IS STRICTLY PROHIBITED. ANY USE, REUSE OR MODIFICATION WITHOUT WRITTEN CONSENT OF BURSICH ASSOCIATES, INC. SHALL BE AT THE USER'S SOLE RISK AND WITHOUT LIABILITY OR LEGAL EXPOSURE TO BURSICH ASSOCIATES, INC. WHICH SHALL INDEMNIFY AND SAVE HARMLESS BURSICH ASSOCIATES, INC. FOR ALL CLAIMS, DAMAGES, LOSSES AND EXPENSES ARISING FROM THE USE THEREFROM.

NO.	REVISION	DATE	BY
2	REVISED PER TOWNSHIP REVIEW LETTER DATED 12/11/18	1/30/19	BG
1	REVISED PER TOWNSHIP REVIEW LETTERS DATED 9/13/18 & 10/26/18	11/5/18	BG

SEAL

NORTH

MANAGER NF	
DESIGN KK	CHKD. BY
DRAFT BG	CHKD. BY
FILE ROU-01	DATE 8/9/2018
NOTES	SCALE 1"=50'

BURSICH
Sharing your Vision

Corporate Headquarters
2129 East High Street
Pottstown, PA 19464
610-323-4040

Southampton Office
706 Lokeside Drive
Southampton, PA 18966

www.bursich.com

CLIENT
ROUSE/CHAMBERLIN, LTD
500 EXTON COMMONS
EXTON, PA 19341

SUBJECT
OVERALL GRADING PLAN
PRESERVE AT WILLISTOWN
WILLISTOWN TOWNSHIP, CHESTER COUNTY, PENNSYLVANIA

JOB NO. 187872
SHEET NO. 10 OF 26
DWG. NO. GR187872

P:\ROU-01\187872-00\dwg\LD_Plan\GR187872.dwg

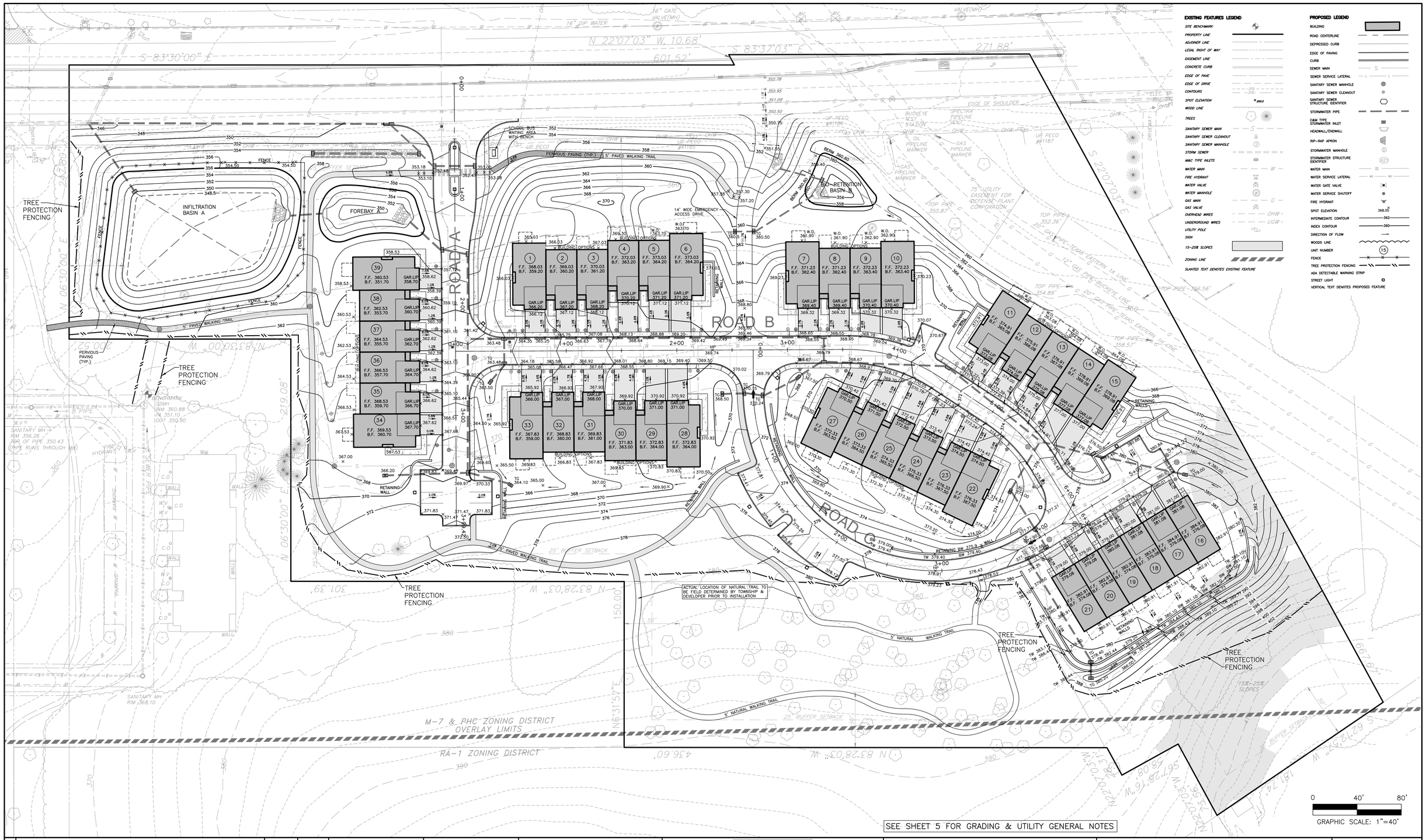

SEE SHEET 5 FOR GRADING & UTILITY GENERAL NOTES

© COPYRIGHT BURSICH ASSOCIATES, INC., 2018
THE PLANS, SPECIFICATIONS, REPORTS, PROGRAMS, PLAN WATER AND OTHER DOCUMENTS AND INSTRUMENTS PREPARED BY BURSICH ASSOCIATES, INC. AS INSTRUMENTS OF SERVICE SHALL REMAIN THE PROPERTY OF BURSICH ASSOCIATES, INC. AND THEREFORE SHALL RETAIN ALL COMMON LAW, STATUTORY AND OTHER RESERVED RIGHTS, INCLUDING THE COPYRIGHT THEREIN. THE REPRODUCTION, ALTERATION OR REPUBLICATION OF THE DOCUMENTS WITHOUT THE EXPRESS WRITTEN CONSENT OF BURSICH ASSOCIATES, INC. IS STRICTLY PROHIBITED. ANY USE, REUSE OR MODIFICATION OF THE DOCUMENTS WITHOUT WRITTEN VERIFICATION OR ADAPTATION BY BURSICH ASSOCIATES, THE USER AND BURSICH ASSOCIATES, INC. WHICH SHALL INDEMNIFY AND SAVE HARMLESS BURSICH ASSOCIATES, INC. FOR ALL CLAIMS, DAMAGES, LOSSES AND EXPENSES ARISING FROM THE USE THEREFROM.

NO.	REVISION	DATE	BY
2	REVISED PER TOWNSHIP REVIEW LETTER DATED 12/11/18	1/30/19	BG
1	REVISED PER TOWNSHIP REVIEW LETTERS DATED 9/13/18 & 10/26/18	11/5/18	BG

SEAL

NORTH

MANAGER NF	
DESIGN KK	CHKD. BY
DRAFT BG	CHKD. BY
FILE ROU-01	DATE 8/9/2018
NOTES	SCALE 1"=40'

BURSICH
Sharing your Vision

Corporate Headquarters
2129 East High Street
Pottstown, PA 19464
610-323-4040

Southampton Office
706 Lakeside Drive
Southampton, PA 18966

www.bursich.com

CLIENT
ROUSE/CHAMBERLIN, LTD
500 EXTON COMMONS
EXTON, PA 19341

SUBJECT
GRADING PLAN
PRESERVE AT WILLISTOWN
WILLISTOWN TOWNSHIP, CHESTER COUNTY, PENNSYLVANIA

JOB NO. 187872
SHEET NO. 11 OF 26
DWG. NO. GR287872

P:\ROU-01\187872-00\dwg\LD_Plan\GR187872.dwg

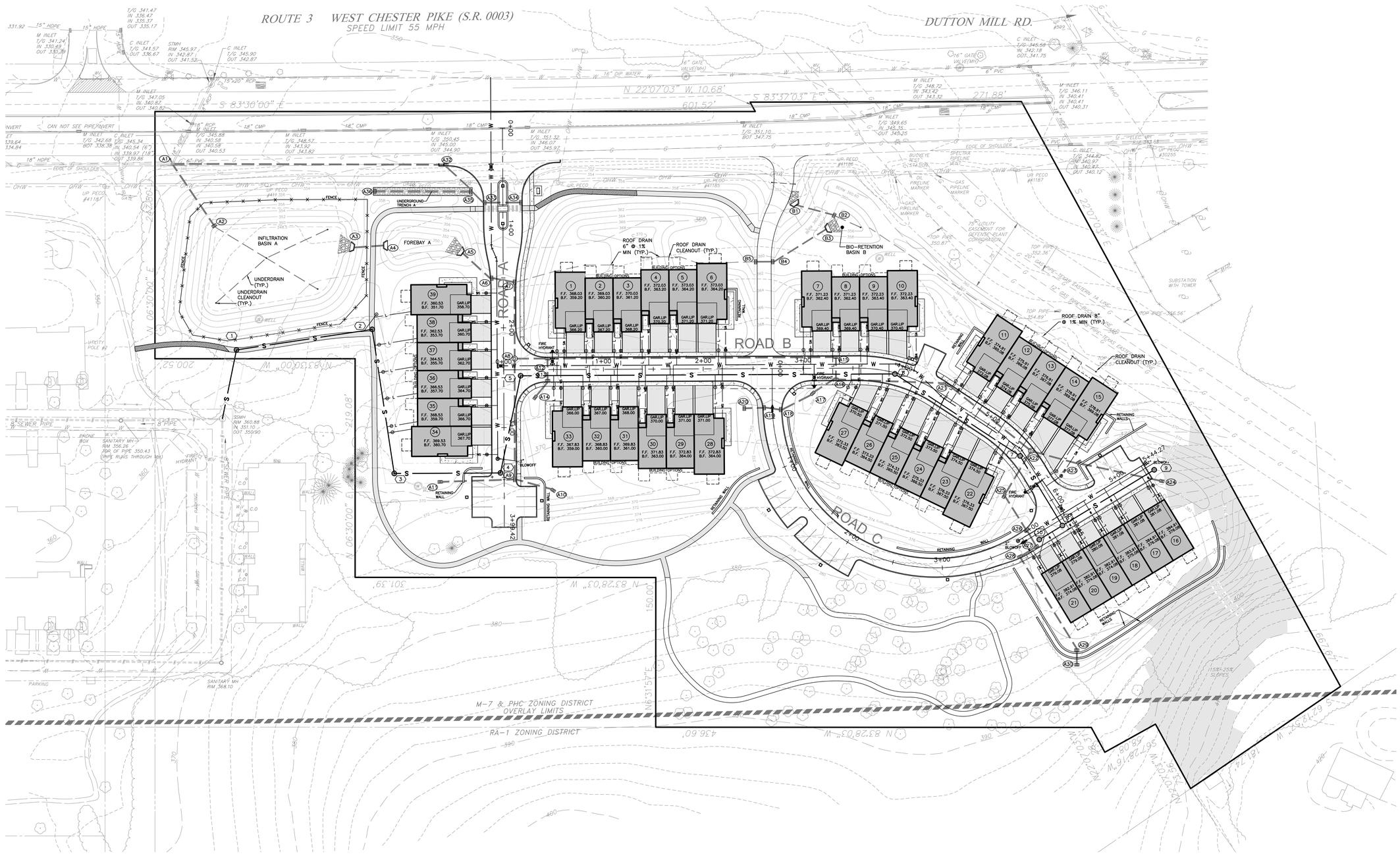

EXISTING FEATURES LEGEND

SITE BENCHMARK
PROPERTY LINE
ADJOINER LINE
LEGAL RIGHT OF WAY
EASEMENT LINE
CONCRETE CURB
EDGE OF PAVE
EDGE OF DRIVE
CONTOURS (372 / 370)
SPOT ELEVATION (×390.0)
WOOD LINE
TREES
SANITARY SEWER MAIN (S)
SANITARY SEWER CLEANOUT
SANITARY SEWER MANHOLE
STORM SEWER
MARC TYPE INLETS
WATER MAIN (W)
FIRE HYDRANT
WATER VALVE
WATER MANHOLE
GAS MAIN (G)
GAS VALVE
OVERHEAD WIRES (OHW)
UNDERGROUND WIRES (UGW)
UTILITY POLE
SIGN
15–25% SLOPES
ZONING LINE
SLANTED TEXT DENOTES EXISTING FEATURE

PROPOSED LEGEND

BUILDING
ROAD CENTERLINE
DEPRESSED CURB
EDGE OF PAVING
CURB
SEWER MAIN (S)
SEWER SERVICE LATERAL (L)
SANITARY SEWER MANHOLE
SANITARY SEWER CLEANOUT
SANITARY SEWER STRUCTURE IDENTIFIER
STORMWATER PIPE
C&M TYPE STORMWATER INLET
HEADWALL/ENDWALL
RIP-RAP APRON
STORMWATER MANHOLE
STORMWATER STRUCTURE IDENTIFIER (A21)
WATER MAIN (W)
WATER SERVICE LATERAL (WS)
WATER GATE VALVE
WATER SERVICE SHUTOFF
FIRE HYDRANT
SPOT ELEVATION (368.50)
INTERMEDIATE CONTOUR (362)
INDEX CONTOUR (360)
DIRECTION OF FLOW
WOODS LINE
UNIT NUMBER (15)
FENCE
TREE PROTECTION FENCING
ADA DETECTABLE WARNING STRIP
STREET LIGHT
VERTICAL TEXT DENOTES PROPOSED FEATURE

WATER FACILITIES NOTE:

ALL WATER FACILITIES AND APPURTENANCES SHALL BE CONSTRUCTED IN ACCORDANCE WITH AQUA, PA STANDARD SPECIFICATIONS AND DETAILS. THE WATER FACILITIES SHOWN ON THESE LAND DEVELOPMENT PLANS ARE APPROXIMATE ONLY IN NATURE. REFER TO SEPARATE AQUA, PA CONSTRUCTION PLANS FOR ACTUAL LOCATIONS, FINAL DESIGN INFORMATION, AND DETAILS FOR PROPOSED MAINS, HYDRANTS, VALVES, AND OTHER APPURTENANCES.

SEE SHEET 5 FOR GRADING & UTILITY GENERAL NOTES & STORM SEWER NOTES

0 50' 100'
GRAPHIC SCALE: 1"=50'

© COPYRIGHT BURSICH ASSOCIATES, INC. 2018
THE PLANS, SPECIFICATIONS, REPORTS, PROGRAMS, CALCULATIONS, DATA, NOTES AND OTHER DOCUMENTS AND INSTRUMENTS PREPARED BY BURSICH ASSOCIATES, INC. AS INSTRUMENTS OF SERVICE SHALL REMAIN THE PROPERTY OF BURSICH ASSOCIATES, INC. AND THEREFORE SHALL RETAIN ALL COMMON LAW, STATUTORY AND OTHER RESERVED RIGHTS, INCLUDING THE COPYRIGHT THERETO. THE REPRODUCTION, ALTERATION OR REPUBLICATION OF THE DOCUMENTS WITHOUT THE EXPRESS WRITTEN CONSENT OF BURSICH ASSOCIATES, INC. IS STRICTLY PROHIBITED. ANY USE, REUSE OR MODIFICATION WITHOUT WRITTEN VERIFICATION OR ADAPTATION BY BURSICH ASSOCIATES, INC. WILL BE AT THE USER'S AND BURSICH ASSOCIATES, INC. WHICH SHALL INDEMNIFY AND SAVE HARMLESS BURSICH ASSOCIATES, INC. FOR ALL CLAIMS, DAMAGES, LOSSES AND EXPENSES ARISING FROM THE USE THEREFROM.

NO.	REVISION	DATE	BY
2	REVISED PER TOWNSHIP REVIEW LETTER DATED 12/11/18	1/30/19	BG
1	REVISED PER TOWNSHIP REVIEW LETTERS DATED 9/13/18 & 10/26/18	11/5/18	BG

SEAL

NORTH

MANAGER NF	
DESIGN KK	CHKD. BY
DRAFT BG	CHKD. BY
FILE ROU-01	DATE 8/9/2018
NOTES	SCALE 1"=50'

BURSICH Sharing your Vision

Corporate Headquarters
2129 East High Street
Pottstown, PA 19464
610-323-4040

Southampton Office
706 Lakeside Drive
Southampton, PA 18966

www.bursich.com

CLIENT
ROUSE/CHAMBERLIN, LTD
500 EXTON COMMONS
EXTON, PA 19341

SUBJECT
OVERALL UTILITY PLAN

PRESERVE AT WILLISTOWN

WILLISTOWN TOWNSHIP, CHESTER COUNTY, PENNSYLVANIA

JOB NO. 187872
SHEET NO. 12 OF 26
DWG. NO. UT187872

P:\ROU-01\187872-00\dwg\LD_Plan\UT187872.dwg

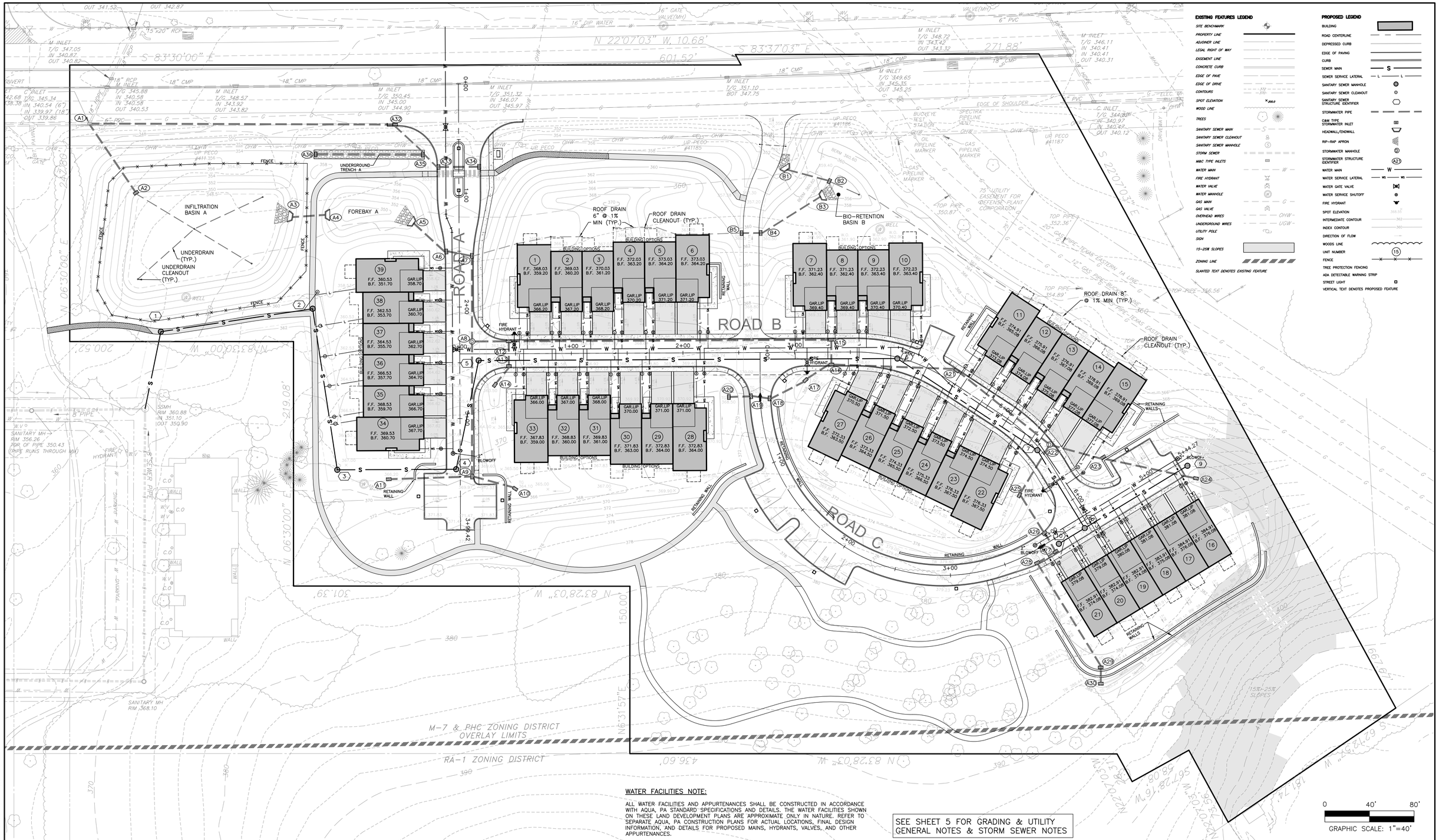

WATER FACILITIES NOTE:

ALL WATER FACILITIES AND APPURTENANCES SHALL BE CONSTRUCTED IN ACCORDANCE WITH AQUA, PA STANDARD SPECIFICATIONS AND DETAILS. THE WATER FACILITIES SHOWN ON THESE LAND DEVELOPMENT PLANS ARE APPROXIMATE ONLY IN NATURE. REFER TO SEPARATE AQUA, PA CONSTRUCTION PLANS FOR ACTUAL LOCATIONS, FINAL DESIGN INFORMATION, AND DETAILS FOR PROPOSED MAINS, HYDRANTS, VALVES, AND OTHER APPURTENANCES.

SEE SHEET 5 FOR GRADING & UTILITY GENERAL NOTES & STORM SEWER NOTES

© COPYRIGHT BURSICH ASSOCIATES, INC. 2018
THE PLANS, SPECIFICATIONS, REPORTS, DRAWINGS, DATA NOTES AND OTHER DOCUMENTS AND INSTRUMENTS PROVIDED BY BURSICH ASSOCIATES, INC. AS INSTRUMENTS OF SERVICE SHALL REMAIN THE PROPERTY OF BURSICH ASSOCIATES, INC. AND THEREFORE SHALL RETAIN ALL COMMON LAW, STATUTORY AND OTHER RESERVED RIGHTS, INCLUDING THE COPYRIGHT THERETO. THE REPRODUCTION, ALTERATION OR REPUBLICATION IN WHOLE OR IN PART WITHOUT THE EXPRESS WRITTEN CONSENT OF BURSICH ASSOCIATES, INC. IS STRICTLY PROHIBITED. ANY USE, REUSE OR MODIFICATION BY OTHERS WITHOUT THE EXPRESS WRITTEN CONSENT OF BURSICH ASSOCIATES, INC. IS ILLEGAL AND WITHOUT LIABILITY TO THE USER AND BURSICH ASSOCIATES, INC. WHICH SHALL INDEMNIFY AND SAVE HARMLESS BURSICH ASSOCIATES, INC. FOR ALL CLAIMS, DAMAGES, LOSSES AND EXPENSES ARISING FROM THE USE THEREFROM.

NO.	REVISION	DATE	BY
2	REVISED PER TOWNSHIP REVIEW LETTER DATED 12/11/18	1/30/19	BG
1	REVISED PER TOWNSHIP REVIEW LETTERS DATED 9/13/18 & 10/26/18	11/5/18	BG

SEAL

NORTH

MANAGER NF	
DESIGN KK	CHKD. BY
DRAFT BG	CHKD. BY
FILE ROU-01	DATE 8/9/2018
NOTES	SCALE 1"=40'

BURSICH
Sharing your Vision

Corporate Headquarters
2129 East High Street
Pottstown, PA 19464
610-323-4040

Southampton Office
706 Lokeside Drive
Southampton, PA 18966

www.bursich.com

CLIENT
ROUSE/CHAMBERLIN, LTD
500 EXTON COMMONS
EXTON, PA 19341

SUBJECT
UTILITY PLAN
PRESERVE AT WILLISTOWN
WILLISTOWN TOWNSHIP, CHESTER COUNTY, PENNSYLVANIA

JOB NO. 187872
SHEET NO. 13 OF 26
DWG. NO. UT287872

P:\ROU-01\187872-00\dwg\LD_Plan\UT187872.dwg

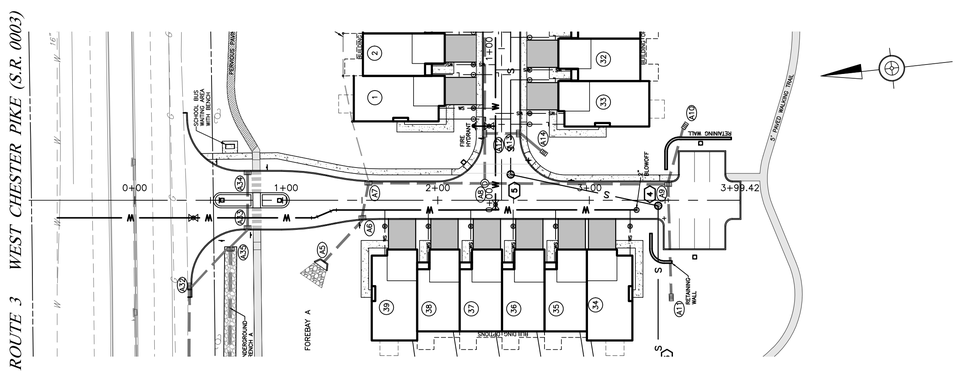

PLAN: ROAD A
SCALE: 1"=50'

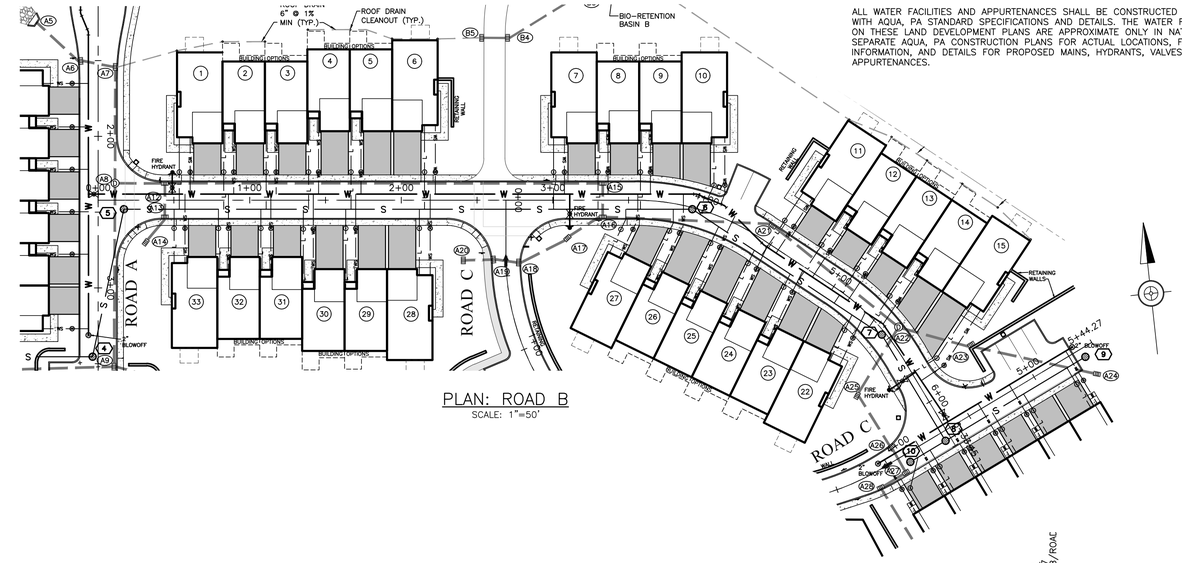

PLAN: ROAD B
SCALE: 1"=50'

0 50' 100'
GRAPHIC SCALE: 1"=50'

WATER FACILITIES NOTE:

ALL WATER FACILITIES AND APPURTENANCES SHALL BE CONSTRUCTED IN ACCORDANCE WITH AQUA, PA STANDARD SPECIFICATIONS AND DETAILS. THE WATER FACILITIES SHOWN ON THESE LAND DEVELOPMENT PLANS ARE APPROXIMATE ONLY IN NATURE. REFER TO SEPARATE AQUA, PA CONSTRUCTION PLANS FOR ACTUAL LOCATIONS, FINAL DESIGN INFORMATION, AND DETAILS FOR PROPOSED MAINS, HYDRANTS, VALVES, AND OTHER APPURTENANCES.

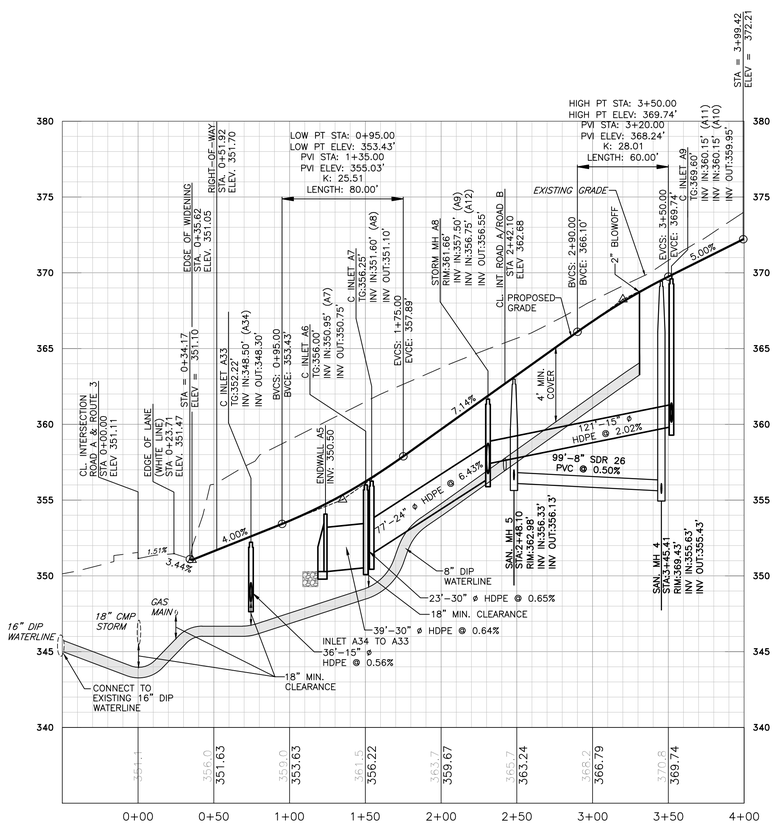

ROAD A

PROFILE SCALE:
HORIZ: 1"=50'
VERT: 1"=5'

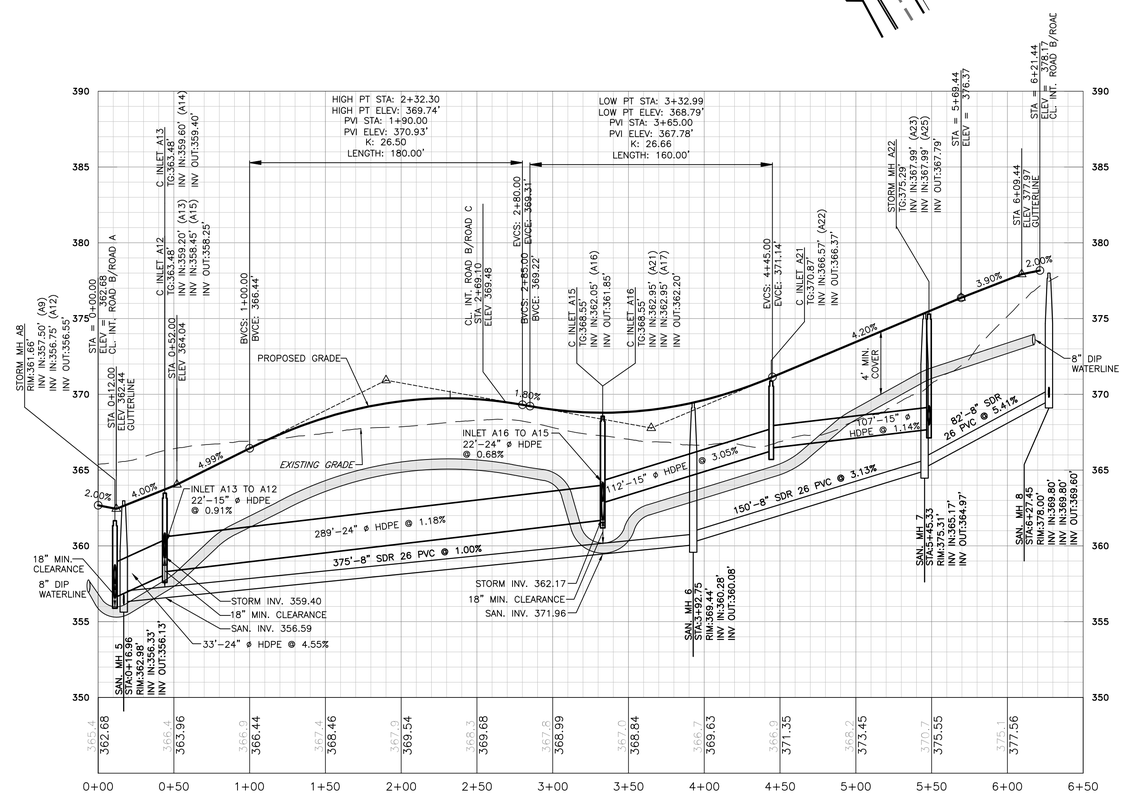

ROAD B

PROFILE SCALE:
HORIZ: 1"=50'
VERT: 1"=5'

© COPYRIGHT BURSICH ASSOCIATES, INC., 2018
ALL RIGHTS RESERVED. THE PLANS, SPECIFICATIONS, REPORTS, MAPS, NOTES AND OTHER DOCUMENTS AND INSTRUMENTS PREPARED BY BURSICH ASSOCIATES, INC. AS INSTRUMENTS OF SERVICE SHALL REMAIN THE PROPERTY OF BURSICH ASSOCIATES, INC. AND THEREFORE SHALL RETAIN ALL COMMON LAW, STATUTORY AND OTHER RESERVED RIGHTS, INCLUDING THE COPYRIGHT THEREIN. THESE DOCUMENTS SHALL NOT BE REPRODUCED, CHANGED OR COPIED WITHOUT THE EXPRESS WRITTEN CONSENT OF BURSICH ASSOCIATES, INC. IS STRICTLY PROHIBITED. ANY USE, REUSE OR OVERUSE WITHOUT WRITTEN CONSENT SHALL BE DEEMED TO BE ILLEGAL AND UNAUTHORIZED. BY ANY SUCH USE, THE USER AND BURSICH ASSOCIATES, INC. WHICH SHALL INDEMNIFY AND SHALL HARMLESS BURSICH ASSOCIATES, INC. FOR ALL CLAIMS, DAMAGES, LOSSES AND EXPENSES ARISING FROM THE USE THEREFROM.

NO.	REVISION	DATE	BY
2	REVISED PER TOWNSHIP REVIEW LETTER DATED 12/11/18	1/30/19	BG
1	REVISED PER TOWNSHIP REVIEW LETTERS DATED 9/13/18 & 10/26/18	11/5/18	BG

SEAL

NORTH

MANAGER NF	
DESIGN KK	CHKD. BY
DRAFT BG	CHKD. BY
FILE ROU-01	DATE 8/9/2018
NOTES	SCALE AS NOTED

BURSICH
Sharing your Vision

Corporate Headquarters
2129 East High Street
Pottstown, PA 19464
610-323-4040

Southampton Office
706 Lokeside Drive
Southampton, PA 18966

www.bursich.com

CLIENT
ROUSE/CHAMBERLIN, LTD
500 EXTON COMMONS
EXTON, PA 19341

SUBJECT
PLAN & PROFILE: ROAD A & B

PRESERVE AT WILLISTOWN

WILLISTOWN TOWNSHIP, CHESTER COUNTY, PENNSYLVANIA

JOB NO. 187872
SHEET NO. 14 OF 26
DWG. NO. RP187872

P:\ROU-01\187872-00\dwg\LD_Plan\RP187872.dwg

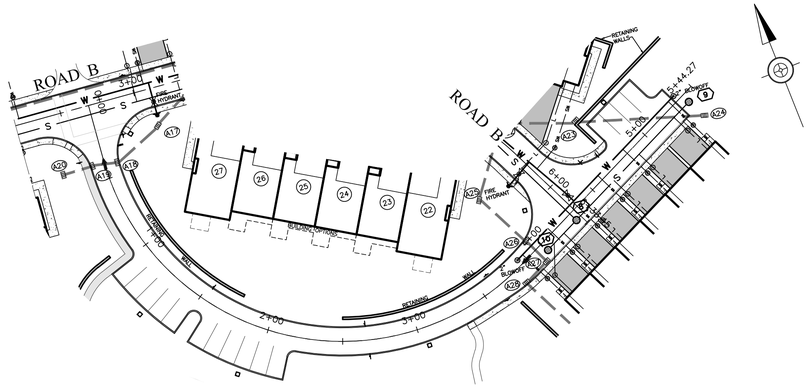

PLAN: ROAD C

SCALE: 1"=50'

WATER FACILITIES NOTE:

ALL WATER FACILITIES AND APPURTENANCES SHALL BE CONSTRUCTED IN ACCORDANCE WITH AQUA, PA STANDARD SPECIFICATIONS AND DETAILS. THE WATER FACILITIES SHOWN ON THESE LAND DEVELOPMENT PLANS ARE APPROXIMATE ONLY IN NATURE. REFER TO SEPARATE AQUA, PA CONSTRUCTION PLANS FOR ACTUAL LOCATIONS, FINAL DESIGN INFORMATION, AND DETAILS FOR PROPOSED MAINS, HYDRANTS, VALVES, AND OTHER APPURTENANCES.

0 50' 100'

GRAPHIC SCALE: 1"=50'

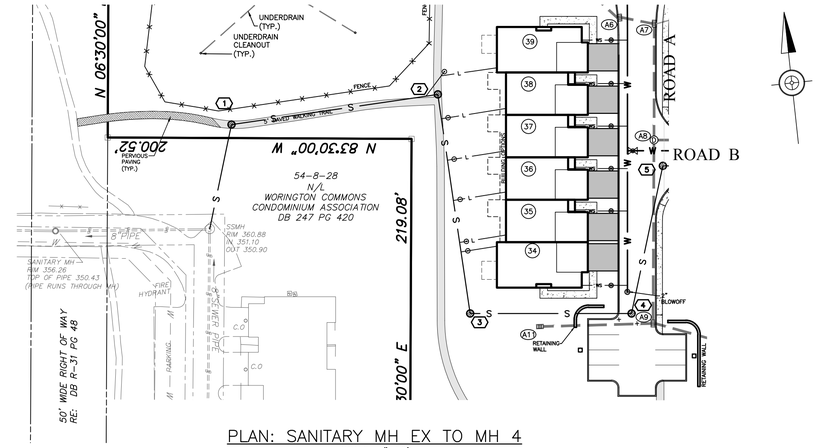

PLAN: SANITARY MH EX TO MH 4

SCALE: 1"=50'

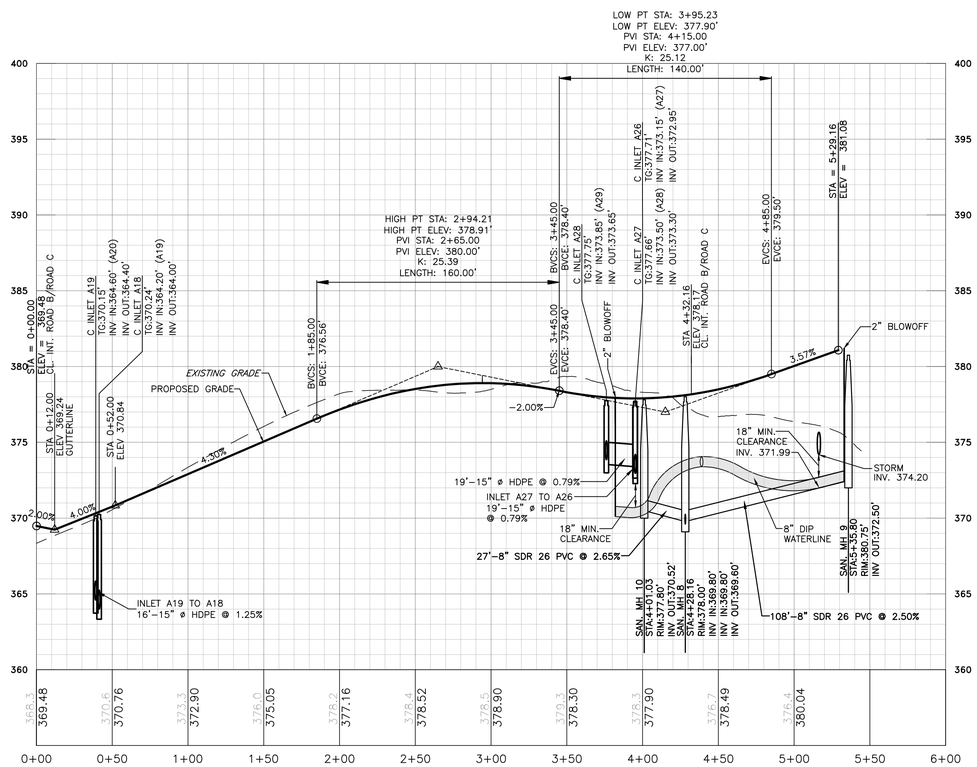

ROAD C

PROFILE SCALE:

HORIZ: 1"=50'

VERT: 1"=5'

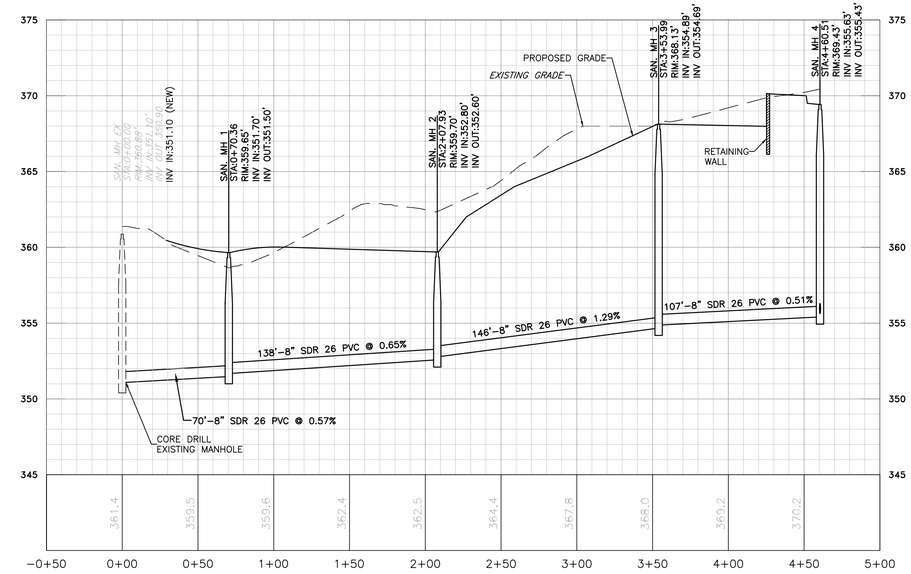

SAN. MH EX TO MH 4

PROFILE SCALE:

HORIZ: 1"=50'

VERT: 1"=5'

© COPYRIGHT BURSICH ASSOCIATES, INC. 2018
THE PLANS, SPECIFICATIONS, REPORTS, DATA, WATER AND OTHER DOCUMENTS AND INSTRUMENTS PREPARED BY BURSICH ASSOCIATES, INC. AS INSTRUMENTS OF SERVICE SHALL REMAIN THE PROPERTY OF BURSICH ASSOCIATES, INC. AND THEREFORE SHALL RETAIN ALL COMMON LAW, STATUTORY AND OTHER RESERVED RIGHTS, INCLUDING COPYRIGHT. THE CLIENT MAY ALLOW OTHERS TO REVIEW AND REPRODUCE THE DOCUMENTS WITHOUT THE EXPRESS WRITTEN CONSENT OF BURSICH ASSOCIATES, INC. IS STRICTLY PROHIBITED. ANY USE, REUSE OR MODIFICATION OF THE DOCUMENTS BY ANYONE OTHER THAN THE CLIENT IS PROHIBITED. BY ACCEPTING THE DOCUMENTS, THE USER AND BURSICH ASSOCIATES, INC. WHICH SHALL INDEMNIFY AND SAVE HARMLESS BURSICH ASSOCIATES, INC. FOR ALL CLAIMS, DAMAGES, LOSSES AND EXPENSES ARISING FROM THE USE THEREFROM.

NO.	REVISION	DATE	BY
2	REVISED PER TOWNSHIP REVIEW LETTER DATED 12/11/18	1/30/19	BG
1	REVISED PER TOWNSHIP REVIEW LETTERS DATED 9/13/18 & 10/26/18	11/5/18	BG

SEAL

NORTH

MANAGER NF	
DESIGN KK	CHKD. BY
DRAFT BG	CHKD. BY
FILE ROU-01	DATE 8/9/2018
NOTES	SCALE AS NOTED

BURSICH Sharing your Vision

Corporate Headquarters
2129 East High Street
Pottstown, PA 19464
610-323-4040

Southampton Office
706 Lakeside Drive
Southampton, PA 18966

www.bursich.com

CLIENT

ROUSE/CHAMBERLIN, LTD
500 EXTON COMMONS
EXTON, PA 19341

SUBJECT

PLAN & PROFILE: ROAD C & UTILITY PROFILES

PRESERVE AT WILLISTOWN

WILLISTOWN TOWNSHIP, CHESTER COUNTY, PENNSYLVANIA

JOB NO. 187872

SHEET NO. 15 OF 26

DWG. NO. RP287872

P:\ROU-01\187872-00\dwg\LD_Plan\RP187872.dwg

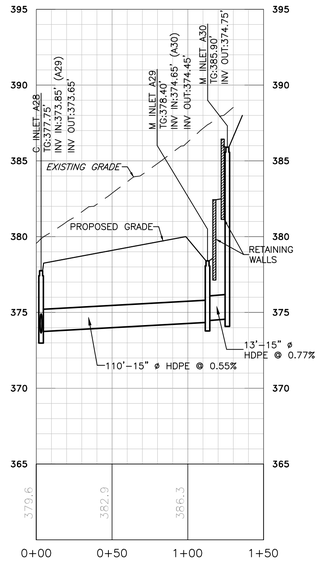

STORM INLET A30 TO A28

PROFILE SCALE:
HORIZ: 1"=50'
VERT: 1"=5'

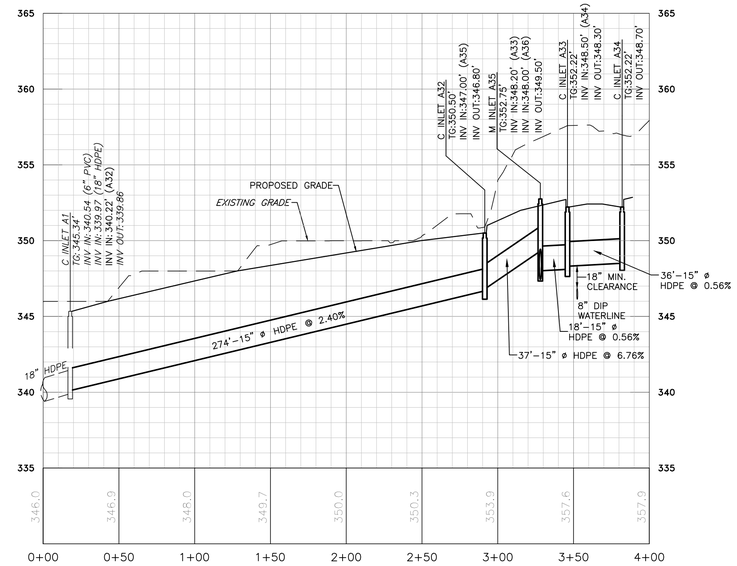

STORM INLET A34 TO A1

PROFILE SCALE:
HORIZ: 1"=50'
VERT: 1"=5'

WATER FACILITIES NOTE:

ALL WATER FACILITIES AND APPURTENANCES SHALL BE CONSTRUCTED IN ACCORDANCE WITH AQUA, PA STANDARD SPECIFICATIONS AND DETAILS. THE WATER FACILITIES SHOWN ON THESE LAND DEVELOPMENT PLANS ARE APPROXIMATE ONLY IN NATURE. REFER TO SEPARATE AQUA, PA CONSTRUCTION PLANS FOR ACTUAL LOCATIONS, FINAL DESIGN INFORMATION, AND DETAILS FOR PROPOSED MAINS, HYDRANTS, VALVES, AND OTHER APPURTENANCES.

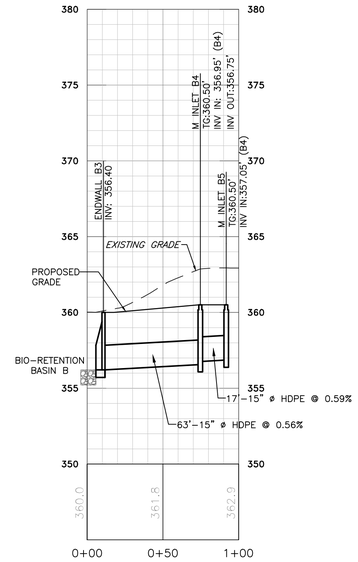

STORM INLET B5 TO ENDWALL B3

PROFILE SCALE:
HORIZ: 1"=50'
VERT: 1"=5'

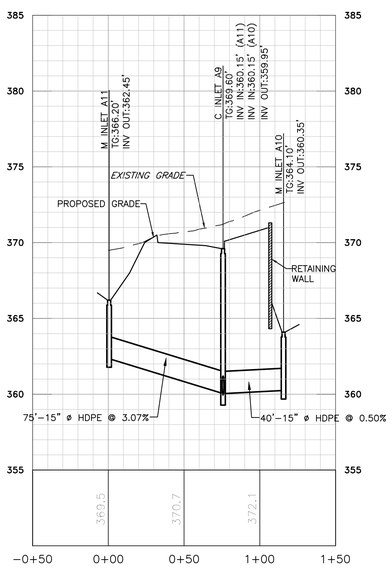

STORM INLET A11 TO A10

PROFILE SCALE:
HORIZ: 1"=50'
VERT: 1"=5'

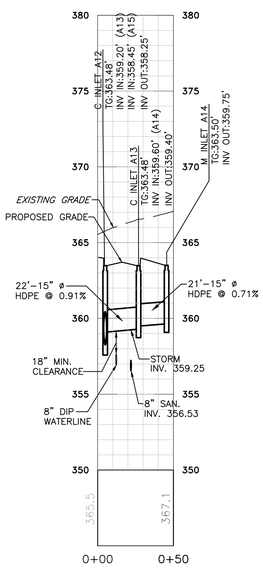

STORM INLET A14 TO A12

PROFILE SCALE:
HORIZ: 1"=50'
VERT: 1"=5'

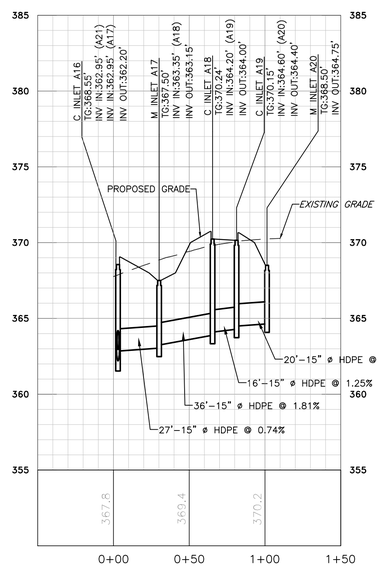

STORM INLET A20 TO A16

PROFILE SCALE:
HORIZ: 1"=50'
VERT: 1"=5'

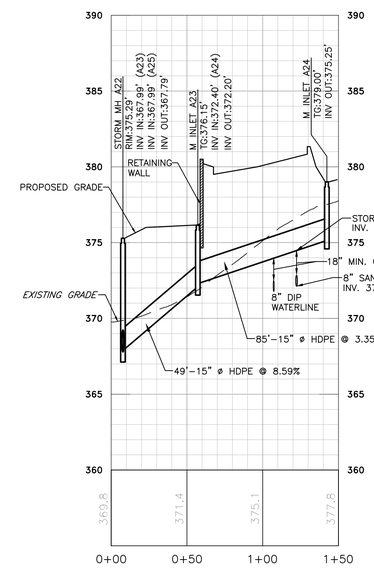

STORM INLET A24 TO MH A22

PROFILE SCALE:
HORIZ: 1"=50'
VERT: 1"=5'

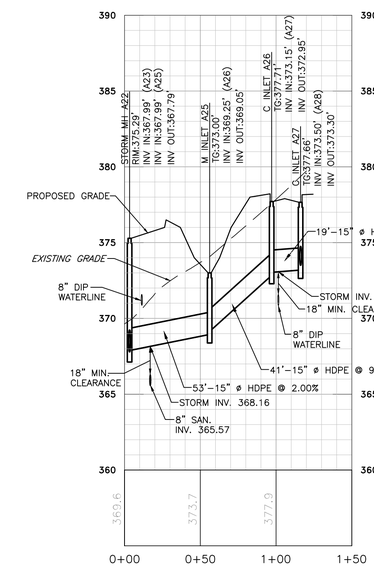

STORM INLET A27 TO MH A22

PROFILE SCALE:
HORIZ: 1"=50'
VERT: 1"=5'

© COPYRIGHT BURSICH ASSOCIATES, INC., 2018
THE PLANS, SPECIFICATIONS, REPORTS, DRAWINGS, WORK NOTES AND OTHER DOCUMENTS AND INSTRUMENTS PREPARED BY BURSICH ASSOCIATES, INC. AS INSTRUMENTS OF SERVICE SHALL REMAIN THE PROPERTY OF BURSICH ASSOCIATES, INC. AND THEREFORE SHALL RETAIN ALL COMMON LAW, STATUTORY AND OTHER RESERVED RIGHTS, INCLUDING THE COPYRIGHT THEREIN. THE USE BY OWNER OR ANY OTHER PERSON OR ENTITY OF ANY SUCH WITHOUT THE EXPRESS WRITTEN CONSENT OF BURSICH ASSOCIATES, INC. IS STRICTLY PROHIBITED. ANY USE, REUSE OR MODIFICATION BY OWNER OR ANY OTHER PERSON OR ENTITY OF ANY SUCH DOCUMENTS, INSTRUMENTS OR DATA WITHOUT THE USER AND BURSICH ASSOCIATES, INC. WHICH SHALL INDEMNIFY AND SAVE HARMLESS BURSICH ASSOCIATES, INC. FOR ALL CLAIMS, DAMAGES, LOSSES AND EXPENSES ARISING FROM THE USE THEREFROM.

NO.	REVISION	DATE	BY
2	REVISED PER TOWNSHIP REVIEW LETTER DATED 12/11/18	1/30/19	BG
1	REVISED PER TOWNSHIP REVIEW LETTERS DATED 9/13/18 & 10/26/18	11/5/18	BG

SEAL

NORTH

MANAGER NF	
DESIGN KK	CHKD. BY
DRAFT BG	CHKD. BY
FILE ROU-01	DATE 8/9/2018
NOTES	SCALE AS NOTED

BURSICH
Sharing your Vision

Corporate Headquarters
2129 East High Street
Pottstown, PA 19464
610-323-4040

Southampton Office
706 Lakeside Drive
Southampton, PA 18966

www.bursich.com

CLIENT
ROUSE/CHAMBERLIN, LTD
500 EXTON COMMONS
EXTON, PA 19341

SUBJECT
UTILITY PROFILES

PRESERVE AT WILLISTOWN

WILLISTOWN TOWNSHIP, CHESTER COUNTY, PENNSYLVANIA

JOB NO. 187872

SHEET NO. 16 OF 26

DWG. NO. RP387872

P:\ROU-01\187872-00\dwg\LD_Plan\RP187872.dwg

PER PLANTING REQUIREMENTS TABLE ON SHEET 18

- ITEMS 2 AND 4 DECIDUOUS STREET TREE
- ITEMS 2 AND 4 EVERGREEN STREET TREE
- ITEM 3 DECIDUOUS PARKING LOT TREE
- ITEM 3 EVERGREEN PARKING LOT TREE

EXISTING FEATURES LEGEND

SITE BENCHMARK
PROPERTY LINE
ADJOINER LINE
LEGAL RIGHT OF WAY
EASEMENT LINE
CONCRETE CURB
EDGE OF PAVE
EDGE OF DRIVE
CONTOURS (372, 370)
SPOT ELEVATION (×300.0)
WOOD LINE
TREES
SANITARY SEWER MAIN (S)
SANITARY SEWER CLEANOUT
SANITARY SEWER MANHOLE
STORM SEWER
MAC TYPE INLETS
WATER MAIN (W)
FIRE HYDRANT
WATER VALVE
WATER MANHOLE
GAS MAIN (G)
GAS VALVE
OVERHEAD WIRES (OHW)
UNDERGROUND WIRES (UGW)
UTILITY POLE
SIGN
15-25% SLOPES
ZONING LINE
SLANTED TEXT DENOTES EXISTING FEATURE

PROPOSED LEGEND

BUILDING
ROAD CENTERLINE
DEPRESSED CURB
EDGE OF PAVING
CURB
SEWER MAIN (S)
SEWER SERVICE LATERAL (L)
SANITARY SEWER MANHOLE
SANITARY SEWER CLEANOUT
SANITARY SEWER STRUCTURE IDENTIFIER
STORMWATER PIPE
C&M TYPE STORMWATER INLET
HEADWALL/ENDWALL
RIP-RAP APRON
STORMWATER MANHOLE
STORMWATER STRUCTURE IDENTIFIER
WATER MAIN (W)
WATER SERVICE LATERAL (WS)
WATER GATE VALVE
WATER SERVICE SHUTOFF
FIRE HYDRANT
SPOT ELEVATION
INTERMEDIATE CONTOUR (362)
INDEX CONTOUR (360)
DIRECTION OF FLOW
WOODS LINE
UNIT NUMBER (15)
FENCE
TREE PROTECTION FENCING
ADA DETECTABLE WARNING STRIP
STREET LIGHT
VERTICAL TEXT DENOTES PROPOSED FEATURE

0 50' 100'
GRAPHIC SCALE: 1"=50'

LANDSCAPE NOTE:

1. SEE SHEET 18 FOR PLANTING SCHEDULE.
2. SEE SHEET 18 FOR INVASIVE PLAN MANAGEMENT PLAN FOR LONG TERM MAINTENANCE PRACTICE FOR THE ENTIRE EXISTING 2.68 AC. VEGETATED OPEN SPACE AREA (1.362 AC. AREA "FINGER OF THE PROPERTY" TO BE CONVEYED TO APPLICANT AND 1.312 AC. "FINGER OF THE PROPERTY" TO REMAIN AS PART OF THE WORINGTON COMMONS CONDOMINIUM ASSOCIATION.)
3. REMOVE AND TREAT EXISTING INVASIVE PLANT SPECIES AND VINE ROOT STUBS WITHIN WOODED AREAS IN OPEN SPACE WITH TWO TREATMENTS PER YEAR (VIA PESTICIDE APPLICATION IN YEAR ONE AND TWO) FOR FIRST TWO YEARS. IN YEAR 3 THE DEVELOPER SHALL PLANT 80 SUB-STORY PLANTINGS WITHIN THE TREED AREA AND THE MAINTENANCE RESPONSIBILITY WILL BE TURNED OVER TO THE RESPECTIVE HOMEOWNERS ASSOCIATION.

© COPYRIGHT BURSICH ASSOCIATES, INC., 2018
THE PLANS, SPECIFICATIONS, REPORTS, DESIGNS, DATA, WATER AND OTHER DOCUMENTS AND INSTRUMENTS PREPARED BY BURSICH ASSOCIATES, INC. AS INSTRUMENTS OF SERVICE SHALL REMAIN THE PROPERTY OF BURSICH ASSOCIATES, INC. AND THEREFORE SHALL RETAIN ALL COMMON LAW, STATUTORY AND OTHER RESERVED RIGHTS, INCLUDING THE COPYRIGHT THERETO. THE PLANS, SPECIFICATIONS, REPORTS, DESIGNS, DATA AND OTHER DOCUMENTS AND INSTRUMENTS WITHOUT THE EXPRESS WRITTEN CONSENT OF BURSICH ASSOCIATES, INC. IS STRICTLY PROHIBITED. ANY USE, REUSE OR MODIFICATION TO THE PLANS, SPECIFICATIONS, REPORTS, DESIGNS, DATA AND OTHER DOCUMENTS AND INSTRUMENTS BY THE USER AND BURSICH ASSOCIATES, INC. WHICH SHALL INDEMNIFY AND SAVE HARMLESS BURSICH ASSOCIATES, INC. FOR ALL CLAIMS, DAMAGES, LOSSES AND EXPENSES ARISING FROM THE USE THEREFROM.

NO.	REVISION	DATE	BY
2	REVISED PER TOWNSHIP REVIEW LETTER DATED 12/11/18	1/30/19	BG
1	REVISED PER TOWNSHIP REVIEW LETTERS DATED 9/13/18 & 10/26/18	11/5/18	BG

SEAL: PENNSYLVANIA REGISTERED LANDSCAPE ARCHITECT — ROBERT KRYDER — REGISTRATION NUMBER LA680-E
Kim R. Kryder, R.L.A.

NORTH

MANAGER NF	
DESIGN KK	CHKD. BY
DRAFT BG	CHKD. BY
FILE ROU-01	DATE 8/9/2018
NOTES	SCALE 1"=50'

BURSICH — Sharing your Vision

Corporate Headquarters
2129 East High Street
Pottstown, PA 19464
610-323-4040

Southampton Office
706 Lakeside Drive
Southampton, PA 18966

www.bursich.com

CLIENT
ROUSE/CHAMBERLIN, LTD
500 EXTON COMMONS
EXTON, PA 19341

SUBJECT
LANDSCAPE PLAN
PRESERVE AT WILLISTOWN
WILLISTOWN TOWNSHIP, CHESTER COUNTY, PENNSYLVANIA

JOB NO. 187872
SHEET NO. 17 OF 26
DWG. NO. LA187872

P:\ROU-01\187872-00\dwg\LD_Plan\LA187872.dwg

INVASIVE PLANT MANAGEMENT PLAN

IMPACTS TO TREES WITHIN THE PROTECTION AREA MAY NOT BE VISIBLE FOR SEVERAL YEARS, DEPENDING ON THE CURRENT HEALTH OF EACH TREE AND FREQUENCY AND INTENSITY OF FUTURE STRESSORS (DROUGHT, PESTS, PATHOGENS). ONGOING MONITORING AND MAINTENANCE OF THE PROTECTION AREA WILL BE REQUIRED TO PREVENT FURTHER DEGRADATION TO THE FOREST AND TO MINIMIZE INVASIVE SPECIES HAZARDS TO THE OPEN SPACE AND TRAIL USERS.

MANAGEMENT RECOMMENDATIONS:

1. DURING CONSTRUCTION:

- ERECT TREATMENT AREA FLAGGING AT THE EDGE OF THE PROTECTION AREA TO PREVENT DISTURBANCE BEYOND ITS LIMITS.
- MAINTAIN A VEGETATIVE COVER OVER THE TREATMENT AREA TO MINIMIZE SOIL EROSION AND ESTABLISHMENT OF INVASIVE SPECIES.

2. POST CONSTRUCTION:

- INSPECT (AT LEAST) ONCE ANNUALLY THE PROTECTION AREA AND ADJACENT FOREST (INCLUDING THE 2.68 ACRE WORINGTON COMMONS WOODLAND AREA) FOR COLONIZATION BY INVASIVE PLANTS, PARTICULARLY VINES CAPABLE OF GROWING INTO CANOPY TREES, AND ADDRESS AS NEEDED. THE BEST TIME TO SURVEY IS LATE SUMMER/EARLY FALL TO CAPTURE WOODY (TREES AND SHRUBS) AND HERBACEOUS INVASIVE SPECIES. INSPECTIONS SHOULD BE PERFORMED BY A CONSULTANT WITH AT LEAST A BACHELOR'S DEGREE IN BOTANY, FORESTRY, HORTICULTURE, OR ECOLOGY AND AT LEAST FIVE YEARS OF FIELD EXPERIENCE IN SOUTHEAST PENNSYLVANIA. ANY WORK TO CONTROL INVASIVE PLANTS SHOULD BE SUPERVISED BY A CONSULTANT WITH THE SAME CREDENTIALS.
- INVASIVE PLANTS IDENTIFIED WITHIN THE PROTECTION AREAS SHOULD BE TREATED AS SOON AS PRACTICAL AND EFFECTIVE, BUT PRIOR TO THE NEXT FLOWERING PERIOD OF EACH SPECIES. A REPORT SUMMARIZING MONITORING RESULTS AND RECOMMENDATIONS, AND ANY INVASIVE PLANT RELATED WORK PERFORMED WITHIN OR ADJACENT TO THE PROTECTION AREA DURING EACH CALENDAR YEAR SHOULD BE PROVIDED TO THE HOA.

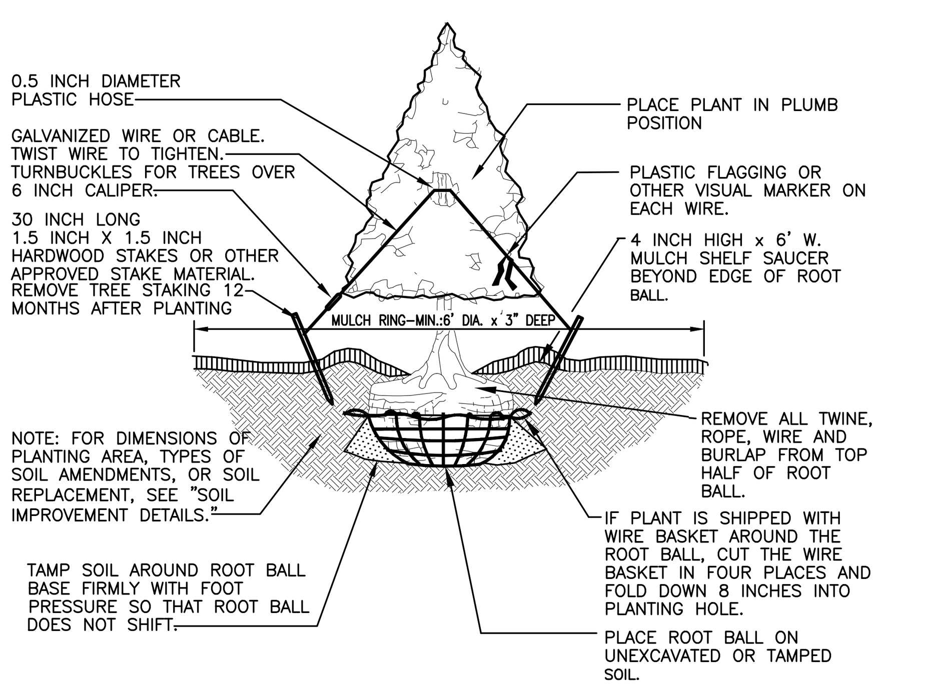

CONIFEROUS TREE PLANTING DETAIL
N.T.S.

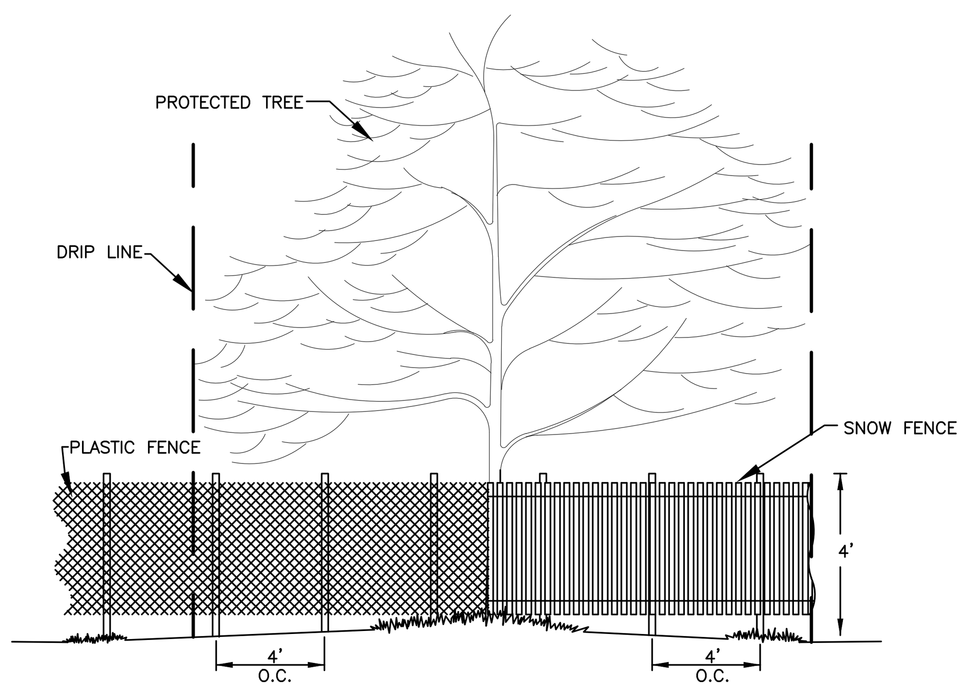

NOTES:
1. MARK TREE TO BE PROTECTED WITH RIBBON PRIOR TO CONSTRUCTION
2. INSTALL CONSTRUCTION FENCE 1 FT OUTSIDE THE PERIMETER OF THE DRIP LINE OF THE MARKED TREES.(FOR TREE CLUSTERS INSTALL ALONG COMBINED PERIMETER.)
3. WHEN CONSTRUCTION IS COMPLETED, REMOVE FENCING.

TREE PROTECTION FENCING
N.T.S.

SEED MIX #1– USE FOR OVERSEEDING BASIN BOTTOM
SEEDING : BASIN FLOOR SEEDING FOR WILDLIFE AND PLANT DIVERSITY.
ERNMX – 127 FROM ERNST CONSERVATION SEEDS OR EQUAL

PERCENT	BOTANICAL NAME	COMMON NAME
25%	ALOPECURUS ARUNDINACEUS	CREEPING FOXTAIL
25%	ELYMUS VIRGINICUS	VIRGINIA WILD RYE
20%	CAREX VULPINOIDEA	FOX SEDGE
5%	AGROSTIS SCABRA	TICKLEGRASS / ROUGH BENTGRASS
5%	POA PALUSTRIS	FOWL BLUEGRASS
4%	BIDENS CERNUA	NODDING BUR MARIGOLD
3%	SPARGANIUM EURYCARPUM	GIANT BUR REED
3%	VERBENA HASTATA	BLUE VERVAIN
2%	JUNCUS EFFUSUS	SOFT RUSH
2%	SCIRPUS ATROVIRENS	GREEN BULRUSH
2%	SCIRPUS CYPERINUS	BONESET
2%	SCIRPUS POLYPHYLLUS	MANY LEAVED BULRUSH
1%	MIMULUS RINGENS	SQUARE STEMMED
1%	SOLIDAGO PATULA	ROUGH LEAVED GOLDENROD
100%	TEMPORARY GRASSES	
100%	LOLIUM PERENNE	ANNUAL RYEGRASS

SEEDING RATE: 1/3 LB. PER 1000 SQ. FT.

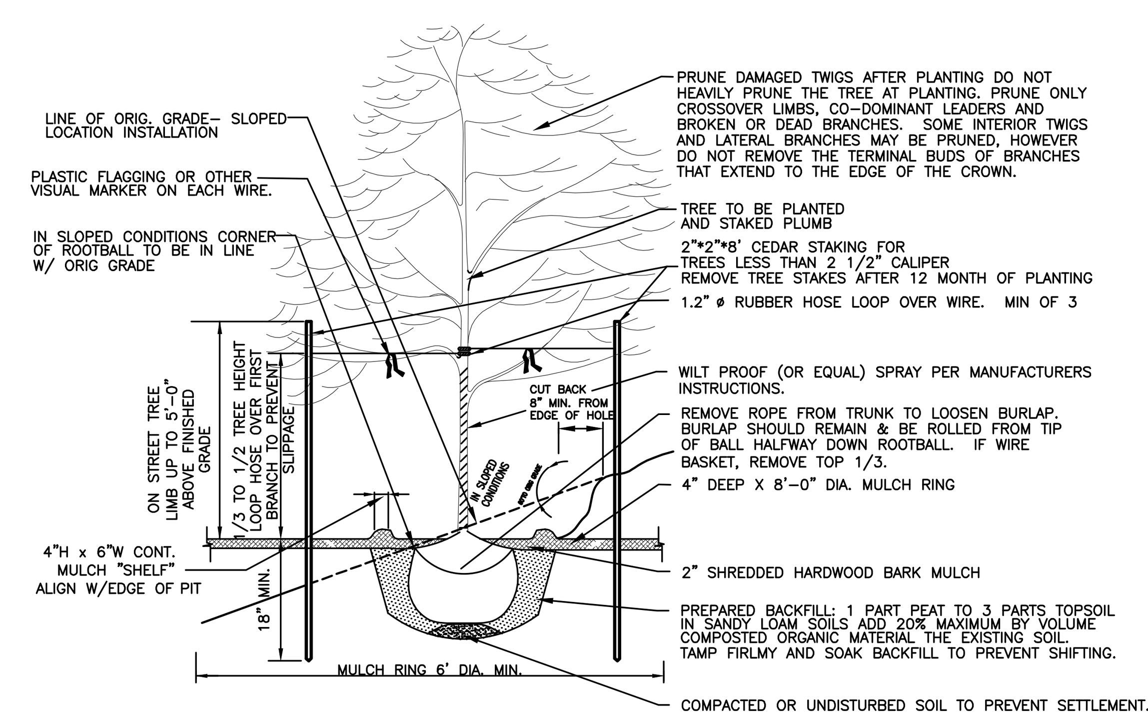

DECIDUOUS TREE PLANTING DETAIL
N.T.S.

PLANTING REQUIREMENTS

ITEM 1	QUANTITY	REQUIRED	PROPOSED
PER 1,000 SF OF GROSS BUILDING FOOTPRINT AREA	63,838 SF		
2 DECIDUOUS TREES		128	128
4 DECIDUOUS SHRUBS		256	256
1 EVERGREEN TREE		64	64
2 EVERGREEN SHRUBS		128	128

ITEM 2	QUANTITY	REQUIRED	PROPOSED
PER 40 LF OF PAVED STREET FRONTAGE	2,800 LF		
1 DECIDUOUS TREES		70	65 + 5 EXISTING
0 DECIDUOUS SHRUBS		0	0
1 EVERGREEN TREE		70	70
0 EVERGREEN SHRUBS		0	0

ITEM 3	QUANTITY	REQUIRED	PROPOSED
PER 2,000 SF OF PARKING/LOADING AREA	4,800 SF		
1 DECIDUOUS TREES		3	3
2 DECIDUOUS SHRUBS		5	5
1 EVERGREEN TREE		3	3
2 EVERGREEN SHRUBS		5	5

ITEM 4	QUANTITY	REQUIRED	PROPOSED
PER 40 LF OF EXISTING PUBLIC ROAD FRONTAGE	900 LF		
1 DECIDUOUS TREES		23	23
0 DECIDUOUS SHRUBS		0	0
1 EVERGREEN TREE		23	23
0 EVERGREEN SHRUBS		0	0

ITEM 5	QUANTITY	REQUIRED	PROPOSED
PER 100 LF OF PROPERTY BOUNDARY ADJOINING RESIDENTIAL OR INSTITUTIONAL PROPERTIES	751 LF		
3 DECIDUOUS TREES		23	23
3 DECIDUOUS SHRUBS		23	23
3 EVERGREEN TREE		23	19 + 4 EXISTING
10 EVERGREEN SHRUBS		76	76

OPEN SPACE UNDERSTORY PLANTINGS

UNDERSTORY PLANTINGS IN THE REHABILITATED OPEN SPACE WOODS WITHIN THIS PROJECT AND ADJACENT WORINGTON COMMONS OPEN SPACE SHALL CONSIST OF 80 PLANTS. THESE PLANTS ARE PART OF THE REQUIRED SHRUB PLANTINGS FOR ITEM 1 (BUILDING FOOTPRINT AREA).

PLANTING LOCATIONS SHALL BE COORDINATED WITH THE TOWNSHIP.

TOTAL LANDSCAPING

	REQUIRED	PROPOSED
DECIDUOUS TREES	247	184 + 83 EXISTING =267
DECIDUOUS SHRUBS	284	284 + EXISTING SHRUBS & SAPPLINGS
EVERGREEN TREE	183	179 + 4 EXISTING = 183
EVERGREEN SHRUBS	209	209 + EXISTING SHRUBS & SAPPLINGS

SITE MAINTENANCE AND GUARANTY

1. ALL LANDSCAPE IMPROVEMENTS TO BE PROVIDED IN ACCORDANCE WITH ARTICLE X AND ARTICLE IV OF TOWNSHIP ORDINANCE 73. CONSERVATION OF VALUED WOODLANDS AND OTHER VEGETATION, SHALL BE INSTALLED AND MAINTAINED BY ACCEPTED PRACTICES AS RECOGNIZED BY THE AMERICAN ASSOCIATION OF NURSERYMEN. PLANTING AND MAINTENANCE OF VEGETATION SHALL INCLUDE, AS APPROPRIATE, BUT NOT NECESSARILY BE LIMITED TO PROVISIONS FOR SURFACE MULCH, GUY-WIRES AND STAKES, IRRIGATION, FERTILIZATION, INSECT AND DISEASE CONTROL, PRUNING, MULCHING, WEEDING AND WATERING.
2. THE APPLICANT SHALL MAKE ARRANGEMENTS ACCEPTABLE TO THE TOWNSHIP THAT ALL LANDSCAPE IMPROVEMENTS INSTALLED IN ACCORDANCE WITH ARTICLE X OF TOWNSHIP ORDINANCE 73 SHALL BE GUARANTEED AND MAINTAINED IN A HEALTHY AND/OR SOUND CONDITION OR OTHERWISE BE REPLACED ONCE BY EQUIVALENT IMPROVEMENTS FOR A PERIOD OF AT LEAST 12 MONTHS FOLLOWING THEIR ACCEPTANCE BY THE TOWNSHIP, EXCEPT AS OTHERWISE REQUIRED BY THE TOWNSHIP SUBDIVISION AND LAND DEVELOPMENT ORDINANCE. AFTER INSTALLATION AND PRIOR TO TOWNSHIP ACCEPTANCE OF THE SITE IMPROVEMENTS, REPRESENTATIVES OF THE TOWNSHIP SHALL PERFORM AN INSPECTION OF THE FINISHED SITE FOR COMPLIANCE WITH THE APPROVED PLANTING PLAN. PROVIDED THAT THE FINISHED SITE IS FOUND TO BE ACCEPTABLE, THE TWELVE-MONTH GUARANTY PERIOD SHALL COMMENCE FIVE DAYS FROM THE DATE OF INSPECTION. PLANTS FOUND TO BE IN POOR HEALTH OR LACKING NORMAL GROWTH HABIT SHALL BE REPLACED WITH A SUBSTITUTE PLANT MATERIAL DETERMINED BY THE TOWNSHIP TO BE MORE SUITABLE FOR THE PLANTING SCHEME. REPLACEMENT PLANTS SHALL BE INSPECTED BY REPRESENTATIVES OF THE TOWNSHIP AFTER INSTALLATION. ALL PLANTS SHALL BE IN A VIGOROUS AND THRIVING CONDITION AT THE END OF THE TWELVE-MONTH PERIOD AS DETERMINED ABOVE. FINAL INSPECTION OF THE SITE FOLLOWING THE TWELVE-MONTH PERIOD WILL BE MADE BY REPRESENTATIVES OF THE TOWNSHIP AND FINAL APPROVAL GIVEN.
3. THE APPLICANT SHALL MAKE ARRANGEMENTS ACCEPTABLE TO THE TOWNSHIP FOR THE PROPERTY'S LONG-TERM LANDSCAPE MAINTENANCE. THE APPLICANT SHALL PROVIDE THE NAMES, ADDRESSES AND TELEPHONE NUMBERS OF THOSE PERSONS OR ORGANIZATIONS WHO WILL BE ASSUMING SUCH RESPONSIBILITIES. LANDSCAPING IMPROVEMENTS REQUIRED BY THIS CHAPTER OR ANY OTHER ORDINANCE SHALL BE SUBJECT TO SUITABLE RESTRICTIVE COVENANTS AND, IF PRACTICABLE, RULES AND REGULATIONS GOVERNING THE USE AND MAINTENANCE OF COMMON LANDS AND FACILITIES, WHICH COVENANTS, RULES AND REGULATIONS SHALL BE IN FORM AND SUBSTANCE ACCEPTABLE TO THE TOWNSHIP SOLICITOR AND, IN THE CASE OF COVENANTS, RULES AND REGULATIONS, SHALL, WITHOUT LIMITING THE FOREGOING, REQUIRE THE MAINTENANCE AND REPLACEMENT AND PROHIBIT THE DESTRUCTION OR REMOVAL OF ALL LANDSCAPING MATERIALS AND IMPROVEMENTS DEPICTED ON THE LANDSCAPING PLAN; EMPOWER THE TOWNSHIP TO ENFORCE SAID OBLIGATIONS; AND PROHIBIT THE AMENDMENT OR TERMINATION OF ANY OF THE MANDATORY TERMS THEREOF WITHOUT THE EXPRESS APPROVAL OF THE TOWNSHIP.
4. WHERE ACCIDENTAL DAMAGE OR VANDALISM OF PLANTS OCCUR, THE APPLICANT SHALL REPLACE THE DAMAGED PLANT MATERIAL IN ACCORDANCE WITH THE ORIGINAL OR MODIFIED PLANTING PLAN. IN SUCH CASES, THE TWELVE-MONTH REPLACEMENT POLICY REQUIRED ABOVE MAY BE WAIVED, AND ANY REMAINING TIME IN THE GUARANTY PERIOD SHALL BE BINDING FOR REPEAT REPLACEMENTS.
5. AT THE TOWNSHIP'S DISCRETION, THE APPLICANT MAY BE REQUIRED TO ESCROW SUFFICIENT FUNDS FOR THE MAINTENANCE AND/OR REPLACEMENT OF THE PROPOSED VEGETATION DURING THE TWELVE-MONTH REPLACEMENT PERIOD. IN ADDITION, AN ESCROW MAY BE REQUIRED FOR THE REMOVAL AND REPLACEMENT OF SPECIMEN TREES DAMAGED DURING CONSTRUCTION.

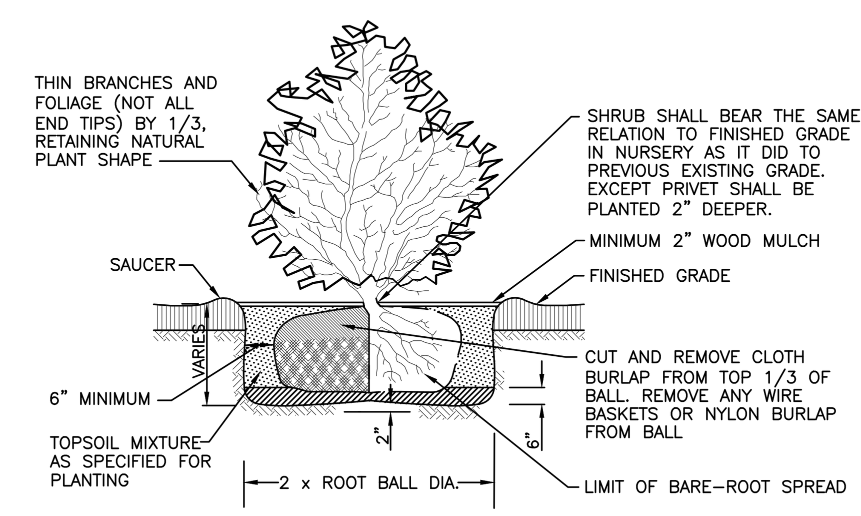

SHRUB PLANTING DETAIL
N.T.S.

LANDSCAPE NOTES:

1. THE LOCATION, DIMENSIONS AND SPACING OF REQUIRED PLANTINGS SHOULD BE ADEQUATE FOR THEIR PROPER GROWTH AND MAINTENANCE, TAKING INTO ACCOUNT THE SIZES OF SUCH PLANTINGS AT MATURITY AND THEIR PRESENT AND FUTURE ENVIRONMENTAL REQUIREMENTS, SUCH AS WIND, SOIL, MOISTURE AND SUNLIGHT.
2. PLANT MATERIAL SHALL BE TRUE TO SPECIES AND VARIETY. ALL PLANTS SHALL CONFORM TO THE MINIMUM STANDARDS FOR HEALTH, FORM AND ROOT CONDITION AS OUTLINED IN THE PUBLICATIONS OF THE AMERICAN STANDARD FOR NURSERY STOCK, ANSI OR U.S.A.S SECTION 60.1 OF THE AMERICAN ASSOCIATION OF NURSERYMEN (AAN) STANDARDS, LATEST EDITION.
3. ALL PLANT MATERIAL SHALL BE HARDY WITHIN THE UNITED STATES DEPARTMENT OF AGRICULTURE (USDA) HARDINESS ZONE 6, APPLICABLE TO WILLISTOWN TOWNSHIP AND SHALL BE NURSERY GROWN.
4. ALL PLANT MATERIAL SHALL BE GUARANTEED BY THE DEVELOPER FOR 12 MONTHS FROM THE DATE OF FINAL APPROVAL OF THE LANDSCAPE INSTALLATION BY TOWNSHIP ENGINEER. ANY PLANT MATERIAL THAT IS 25% OR GREATER DEAD SHALL BE CONSIDERED DEAD.
5. SOIL CONDITIONS SHALL BE TESTED PRIOR TO PLANTING AND TREATED WITH APPROPRIATE INGREDIENTS TO BALANCE THE PH.
6. THE CONTRACTOR SHALL VERIFY ALL QUANTITIES AND DIMENSIONS, AND SHALL REPORT ANY DISCREPANCIES TO THE LANDSCAPE ARCHITECT.
7. THE CONTRACTOR SHALL ASCERTAIN THE LOCATION OF ALL UTILITIES AND SHALL ASSUME RESPONSIBILITY FOR DAMAGES TO UTILITIES AND PROPERTY AS A RESULT OF HIS WORK.
8. PLANT MATERIAL SHALL BE OF NURSERY STOCK, BALLED AND BURLAPPED OR CONTAINER GROWN. IT SHALL BE OF SYMMETRICAL GROWTH, FREE OF INSECTS, PESTS AND DISEASE, HAVE A NORMAL GROWTH HABIT, VIGOROUS ROOT SYSTEM AND DURABLE UNDER THE MAINTENANCE CONTEMPLATED.
9. ALL PLANTING MATERIALS SHALL BE INSTALLED PER THE A.A.N. STANDARDS WITH REGARD TO PLANTING, PIT SIZE, BACKFILL MIXTURE, STACKING AND GUYING, OR AS MAY BE INDICATED ON THE DRAWINGS.

   ADDITIONALLY:
   -TREES WITH POOR QUALITY ROOT BALLS OR ROOT BALLS THAT HAVE BEEN CRACKED OR DAMAGED SHALL BE REJECTED.
   -TREES THAT HAVE GROWN TOO CLOSE TOGETHER IN THE NURSERY, RESULTING IN WEAK TRUNKS SHALL BE REJECTED.
   -TREES WITH CENTRAL LEADER BROKEN SHALL BE REJECTED.
   -TREES THAT DO NOT DISPLAY THE NORMAL CHARACTERISTICS SHALL BE REJECTED.
   -TREES THAT HAVE GROWN TOGETHER IN NURSERY, RESULTING IN WEAK TRUNKS SHALL BE REJECTED.
   -TREES AND SHRUBS SHALL BE FREE FROM DEFECTS AND INJURIES AND BE CERTIFIED BY THE APPROPRIATE FEDERAL AND STATE AUTHORITIES TO BE FREE FROM DISEASES AND INSECT INFESTATIONS.
   -TREES AND SHRUBS SHALL BE FRESHLY DUG AND NURSERY GROWN. THEY SHALL HAVE BEEN GROWN UNDER CLIMATIC CONDITIONS SIMILAR TO THOSE IN THE TOWNSHIP OR PROPERLY ACCLIMATED TO CONDITIONS OF THE TOWNSHIP.
10. ALL STREET TREES SHALL BE PLANTED A MINIMUM DISTANCE OF FIVE (5) FEET FROM THE ULTIMATE RIGHT-OF-WAY LINE OF WEST CHESTER PIKE.
11. TREES SHALL BE PLANTED A MINIMUM DISTANCE OF THREE (3) FEET FROM CURBS AND SIDEWALKS, FIFTEEN (15) FEET FROM OVERHEAD UTILITIES AND SIX (6) FEET FROM UNDERGROUND UTILITIES.
12. TREES AND OTHER REQUIRED PLANT MATERIAL SHALL NOT BE PLANTED UNTIL THE FINISHED GRADING OF THE LAND DEVELOPMENT HAS BEEN COMPLETED.
13. ADDITIONAL FOUNDATION OR SITE LANDSCAPING MAY BE ADDED AT THE OWNER'S EXPENSE
14. AFTER INSTALLATION PRUNE BRANCHES AND FOLIAGE (NOT ALL EVERGREENS OR DECIDUOUS END TIPS) BY 1/3, RETAINING NATURAL PLANT SHAPE. DO NOT CUT LEADER ON ANY EVERGREEN SHRUB OR ANY EVERGREEN OR DECIDUOUS TREE. SPRAY TRUNK STEM AND BRANCHES WITH ANTI-DESICANT WAX.
15. TREES AND SHRUBS SHALL BEAR SAME RELATION TO FINISH GRADE AS PREVIOUS FINISH GRADE IN NURSERY.
16. SCARIFY COMPACTED SUBSOILS AT BOTTOM AND SIDES OF PLANTING PIT BEFORE INSTALLATION.
17. THESE LANDSCAPE PLANS SHALL BE REGARDED AS SCHEMATIC IN NATURE. ALL PLANT LOCATIONS SHALL BE SUBJECT TO FIELD ADJUSTMENT BY THE OWNER'S REPRESENTATIVE.
18. ALL AREAS UNDERLAIN BY ROCK ARE TO BE MEASURED TO DETERMINE IF MINIMUM DEPTH NECESSARY TO PERMIT PLACEMENT OF BACKFILL REQUIRED TO ENSURE PROPER DRAINAGE IS FEASIBLE OR ALTERNATELY, IF ADDITIONAL FILL MATERIAL IS FEASIBLE TO ACHIEVE PROPER PLANTING. CONTRACTOR SHALL REPORT THIS CONDITION TO THE LANDSCAPE ARCHITECT AND RECEIVE APPROVAL ON METHOD OF PLANTING.
19. FILLING OF SOILS OVER THE ROOTS OF TREES TO BE PRESERVED IS STRICTLY PROHIBITED.
20. CLEANLY PRUNE ALL DAMAGED ROOT ENDS IMMEDIATELY PRIOR TO BACKFILLING PLANTING PIT.
21. ALL SIGHT TRIANGLES SHALL REMAIN CLEAR OF OBSTRUCTIONS AND ANY PLANT MATERIAL WHICH COULD ENDANGER SAFETY SHALL BE REMOVED. IT SHALL BE THE RESPONSIBILITY OF THE HOMEOWNERS ASSOCIATION TO ENSURE ALL PLANTINGS AND ARCHITECTURAL ELEMENTS ARE MAINTAINED TO PROVIDE A SAFE ENVIRONMENT.
22. ROOT BARRIERS SHALL BE PLACED ALONG SIDEWALKS AND WALKWAYS WHERE TREES ARE TO BE PLACED WITHIN 10' OF THE WALK.
23. FOUNDATION PLANTINGS MAY BE SUBSTITUTED WITH ALTERNATE LANDSCAPING WITH THE APPROVAL OF THE TOWNSHIP LANDSCAPE ARCHITECT. ADDITIONAL LANDSCAPING CAN BE PROVIDED AT THE DISCRETION OF THE DEVELOPER.

PLANTING SCHEDULE UNDERSTORY SHRUBS FOR WOODS

QUAN	BOTANICAL NAME	COMMON NAME	MIN. PLANTING HEIGHT/WIDTH	ROOT
	UNDERSTORY SHRUBS			
	EVERGREEN SHRUBS			
30	RHODODENDRON MAXIMUM	ROSEBAY RHODODENDRON	24" HIGH	CONTAINER
	DECIDUOUS SHRUBS			
8	AMELANCHIER CANADENSIS	SHADBLOW SERVICEBERRY	4' HIGH	CONTAINER or B&B
8	CERCIS CANADENSIS	EASTERN REDBUD	4' HIGH	CONTAINER or B&B
8	CORNUS FLORIDA	FLOWERING DOGWOOD	4' HIGH	CONTAINER or B&B
8	HAMAMELIS VIRGINIANA	WITCH HAZEL	3' HIGH	CONTAINER or B&B
8	LINDERA BENZOIN	SPICEBUSH	3' HIGH	CONTAINER or B&B
10	VIBURNUM DENTATUM	ARROWWOOD	24" HIGH	CONTAINER
50	TOTAL	100% NATIVE – DECIDUOUS		

PLANTING SCHEDULE SHADE AND ORNAMENTAL TREES

SYM	QUAN	BOTANICAL NAME	COMMON NAME	MIN. PLANTING HEIGHT/WIDTH	ROOT	COMMENTS
		DECIDUOUS TREES				
AR	25	ACER RUBRUM 'OCTOBER GLORY'	'OCTOBER GLORY' RED MAPLE	2-2 1/2" CAL.	B&B	STRAIGHT TRUNK, FULL HEAD
ARK	8	ACER RUBRUM 'KARPICK'	'KARPICK' RED MAPLE	2-2 1/2" CAL.	B&B	STRAIGHT TRUNK, FULL HEAD
AC	12	AMELANCHIER CANADENSIS	SHADBLOW SERVICEBERRY	2-2 1/2" CAL.	B&B	STRAIGHT TRUNK, FULL HEAD
BN	10	BETULA NIGRA	RIVER BIRCH	2-2 1/2" CAL.	B&B	MULTI-TRUNK, FULL HEAD
CC	9	CARPINUS CAROLINIANA	AMERICAN HORNBEAM	2-2 1/2" CAL.	B&B	STRAIGHT TRUNK, FULL HEAD
CV	13	CHIONANTHUS VIRGINICUS	WHITE FRINGE TREE	2-2 1/2" CAL.	B&B	STRAIGHT TRUNK, FULL HEAD
CM	12	CORNUS MAS	CORNELIAN CHERRY DOGWOOD	2-2 1/2" CAL.	B&B	STRAIGHT TRUNK, FULL HEAD
KP	9	KOELREUTERIA PANICULATA 'ROSE LANTERN'	ROSE LANTERN GOLDENRAINTREE	2-2 1/2" CAL.	B&B	STRAIGHT TRUNK, FULL HEAD
LS	3	LIQUIDAMBAR STYRACIFLUA ROTUNDILOBA	ROTUNDILOBA SWEET GUM	2-2 1/2" CAL.	B&B	STRAIGHT TRUNK, FULL HEAD
OV	30	OSTRYA VIRGINIANA	AMERICAN HOPHORNBEAM	2-2 1/2" CAL.	B&B	STRAIGHT TRUNK, FULL HEAD
OA	21	OXYDENDRON ARBOREUM	SOURWOOD	2-2 1/2" CAL.	B&B	STRAIGHT TRUNK, FULL HEAD
QA	3	QUERCUS ALBA	WHITE OAK	2-2 1/2" CAL.	B&B	STRAIGHT TRUNK, FULL HEAD
QI	3	QUERCUS IMBRICARIA	SHINGLE OAK	2-2 1/2" CAL.	B&B	STRAIGHT TRUNK, FULL HEAD
QP	15	QUERCUS PHELLOS	WILLOW OAK	2-2 1/2" CAL.	B&B	STRAIGHT TRUNK, FULL HEAD
TA	6	TILIA AMERICANA	AMERICAN LINDEN	2-2 1/2" CAL.	B&B	STRAIGHT TRUNK, FULL HEAD
UA	5	ULMUS AMERICANA 'VALLEY FORGE'	VALLEY FORGE ELM	2-2 1/2" CAL.	B&B	STRAIGHT TRUNK, FULL HEAD
	184	TOTAL	89% NATIVE – 11% NON-NATIVE			
		EVERGREEN TREES				
AB	29	ABIES CONCOLOR	WHITE FIR	6' HIGH	B&B	STRAIGHT TRUNK, FULL BODY
IO	24	ILEX OPACA	AMERICAN HOLLY	6' HIGH	B&B	STRAIGHT TRUNK, FULL BODY
JV	27	JUNIPERUS VIRGINIANA	EASTERN RED CEDAR	6' HIGH	B&B	STRAIGHT TRUNK, FULL BODY
PA	15	PICEA ABIES	NORWAY SPRUCE	6' HIGH	B&B	STRAIGHT TRUNK, FULL BODY
PS	29	PINUS STROBUS	WHITE PINE	6' HIGH	B&B	STRAIGHT TRUNK, FULL BODY
PM	18	PSEUDOTSUGA TAXIFOLIA	DOUGLAS FIR	6' HIGH	B&B	STRAIGHT TRUNK, FULL BODY
TH	37	THUJA OCCIDENTALIS 'WINTERGREEN'	WINTERGREEN ARBORVITAE	6' HIGH	B&B	STRAIGHT TRUNK, FULL BODY
	179	TOTAL	82% NATIVE – 18% NON-NATIVE			
		DECIDUOUS SHRUBS				
ALS	12	ALNUS SERRULATA	SMOOTH ALDER	18"-24" HIGH	CONTAINER	
AC	5	AMELANCHIER CANADENSIS	SHADBLOW SERVICEBERRY	4' HIGH	B&B	BY BASIN A
COM	14	CORNUS AMOMUM	SILKY DOGWOOD	18"-24" HIGH	CONTAINER	
COA	15	COTONEASTER APICULATUS	CRANBERRY COTONEASTER	18"-24" SPREAD	CONTAINER	
IVF	47	ILEX VERTICILLATA	WINTERBERRY HOLLY	24"-36" HIGH	CONTAINER	(41) WINTER RED (FEMALE) (6) RHETT BUTLER (MALE)
IVR	20	ILEX VERTICILLATA	WINTERBERRY HOLLY	18"-24" HIGH	CONTAINER	(45) RED SPRITE (FEMALE) (7) JIM DANDY (MALE)
MYP	19	MYRICA PENNSYLVANIA	BAYBERRY	24" HIGH	CONTAINER	
RAG	19	RHUS AROMATICA 'GROW-LOW'	GROW LOW AROMATIC SUMAC	18"-24" SPREAD	CONTAINER	
SYC	27	SYMPHORICARPOS CHENAULTII	CHENAULT CORALBERRY	18"-24" SPREAD	CONTAINER	
VIA	8	VIBURNUM ACERIFOLIUM	MAPLELEAF VIBURNUM	18"-24" SPREAD	CONTAINER	
VIK	5	VIBURNUM CARLESII	KOREAN SPICE VIBURNUM	18"-24" HIGH	CONTAINER	
VID	24	VIBURNUM DENTATUM	ARROWWOOD	18"-24" HIGH	CONTAINER	
VIP	19	VIBURNUM PRUNIFOLIUM	BLACKHAW VIBURNUM	36" HIGH	CONTAINER or B&B	
	234	TOTAL	91% NATIVE – 9% NON-NATIVE			
		EVERGREEN SHRUBS				
IGC	74	ILEX GLABRA 'COMPACTA'	COMPACT INKBERRY HOLLY	18"-24" HIGH	CONTAINER	
INS	13	ILEX x NELLIE R STEVENS	NELLIE STEVENS HOLLY	36" HIGH	CONTAINER or B&B	
PIE	7	PIERIS FLORIBUNDA	MOUNTAIN ANDROMEDA	24" HIGH	CONTAINER	
RHC	36	RHODODENDRON CAROLINIANUM 'ALBUM'	WHITE CAROLINA RHODODENDRON	24" HIGH	CONTAINER	
RHM	5	RHODODENDRON MAXIMUM	ROSEBAY RHODODENDRON	36" HIGH	CONTAINER or B&B	
RHS	34	RHODODENDRON SCHLIPPENBACHII	ROYAL AZALEA	18"-24" HIGH	CONTAINER	
TCC	10	TAXUS CUSPIDATA CAPITATA	PYRIMIDAL ENGLISH YEW	30" HIGH	CONTAINER or B&B	
	179	TOTAL	87% NATIVE – 13% NON-NATIVE			

NATIVE PLANT

ST ITEMS 2 AND 4 DECIDUOUS STREET TREE
SE ITEMS 2 AND 4 EVERGREEN STREET TREE
PT ITEM 3 DECIDUOUS PARKING LOT TREE
PE ITEM 3 EVERGREEN PARKING LOT TREE

SEE ADDITIONAL PLANTINGS FOR WOODED UNDERSTORY PLANTS NOTED IN PLANTING REQUIREMENTS.

© COPYRIGHT BURSICH ASSOCIATES, INC. 2018
ALL REPORTS, DOCUMENTS, SPECIFICATIONS, COMPUTER FILES, FIELD DATA, NOTES AND OTHER DOCUMENTS AND INSTRUMENTS PREPARED BY BURSICH ASSOCIATES, INC. AS INSTRUMENTS OF SERVICE SHALL REMAIN THE PROPERTY OF BURSICH ASSOCIATES, INC. AND THEREFORE SHALL RETAIN ALL COMMON LAW, STATUTORY AND OTHER RESERVED RIGHTS, INCLUDING THE COPYRIGHT THERETO. ANY USE, REUSE OR MODIFICATION/ALTERATION AND REPRODUCTION WITHOUT THE EXPRESS WRITTEN CONSENT OF BURSICH ASSOCIATES, INC. IS STRICTLY PROHIBITED. ANY USE, REUSE OR MODIFICATION/ALTERATION BY ANYONE WITHOUT WRITTEN CONSENT SHALL BE DEEMED AN AGREEMENT BETWEEN THE USER AND BURSICH ASSOCIATES, INC. WHICH SHALL INDEMNIFY AND SAVE HARMLESS BURSICH ASSOCIATES, INC. FOR ALL CLAIMS, DAMAGES, LOSSES AND EXPENSES ARISING FROM THE USE THEREFROM.

NO.	REVISION	DATE	BY
2	REVISED PER TOWNSHIP REVIEW LETTER DATED 12/11/18	1/30/19	BG
1	REVISED PER TOWNSHIP REVIEW LETTERS DATED 9/13/18 & 10/26/18	11/5/18	BG

SEAL

Kim R. Kryder, R.L.A.

NORTH

MANAGER NF
DESIGN KK | CHKD. BY
DRAFT BG | CHKD. BY
FILE ROU-01 | DATE 8/9/2018
NOTES | SCALE

BURSICH
Sharing your Vision

Corporate Headquarters
2129 East High Street
Pottstown, PA 19464
610-323-4040

Southampton Office
706 Lakeside Drive
Southampton, PA 18966

www.bursich.com

CLIENT
ROUSE/CHAMBERLIN, LTD
500 EXTON COMMONS
EXTON, PA 19341

SUBJECT
LANDSCAPE DETAILS & NOTES

PRESERVE AT WILLISTOWN

WILLISTOWN TOWNSHIP, CHESTER COUNTY, PENNSYLVANIA

JOB NO. 187872
SHEET NO. 18 OF 26
DWG. NO. LA287872

P:\ROU-01\187872-00\dwg\LD_Plan\LA187872.dwg

UB 18-2 Specifications
18" DeepRoot® Tree Root Barrier

Specified tree root barrier is a mechanical barrier and root deflector used to prevent tree roots from damaging hardscapes and landscapes. Assembled in 24" (609 mm) long modules to create varying lengths for linear applications, or perimeter surround applications in varying sizes.

A. Materials
1. The contractor shall furnish and install tree root barrier as specified. The tree root barrier shall be either product #UB 18-2 as manufactured by DeepRoot® Green Infrastructure, LLC, 530 Washington Street, San Francisco, CA, www.deeproot.com (800.458.7668).

2. Root barrier shall be recyclable, black, injection molded panels with 0.75" (1.90 mm) wall thickness in modules 24" (609 mm) long and 18" (460 mm) deep.

3. Root barrier shall be manufactured with 75% reprocessed polypropylene with added ultraviolet inhibitors.

4. Root barrier shall be comprised of 24" (609 mm) panels. Each panel shall have no less than four (4) Molded Integral Vertical Root Directing Ribs of a minimum 0.060" (1.52 mm) thickness, protruding 1/2" (12.7 mm) at 90° from interior of the barrier panel, spaced 6" (152.4 mm) apart. (See Details A & D)

5. Root barrier shall have a Double Top Edge consisting of two parallel, integral, horizontal ribs at the top of the panel at 0.060" (1.52 mm) thickness, 3/8" (9.53 mm) wide and 1/4" (6.35 mm) apart with the lower rib attached to the vertical Root Directing Ribs (See Detail A).

6. Root barrier shall have a minimum of nine (9) Anti-Lift Ground Lock Tabs consisting of integral horizontal ridges of minimum 0.060" (1.52 mm) thickness in the shape of a segment of a circle, the 2-1/4" (57.15 mm) chord of the segment joining the panel wall and the segment, protruding 3/8" (9.53 mm) from the panel. The ground locks on each panel shall be about equally spaced between each of the vertical root directing ribs (See Details B & D).

7. Root barrier shall have an integrated Zipper Joining System for assembly by sliding one panel into another (See Detail C).

U.S. Patents: 5,305,549; and 5,528,857. Other Patents Pending.

Properties	Typical Value	ASTM Test Method
Tensile strength @ yield - Wall	2.354 PSI	D638
Tensile strength @ yield - Hinge	2.846 PSI	D638
Yield Elongation - Wall	7.44%	D638
Yield Elongation - Hinge	7.01%	D638
Flexural Modulus	119.625 PSI	D790B
Notched Izod Impact - Wall	3.84 (ft-lbs)	D256A
Rockwell Hardness r. scale - Wall	84.4	D785A

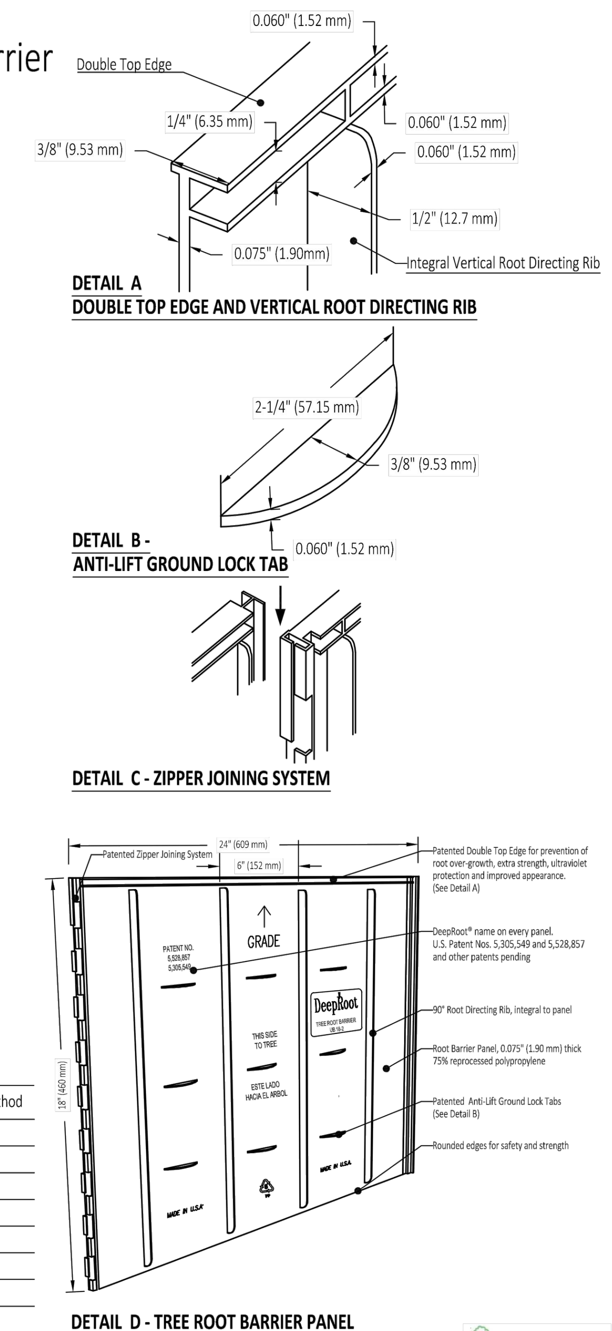

deeproot
© Copyright 2014 DeepRoot Green Infrastructure, LLC

UB 24-2 Specifications
24" DeepRoot® Tree Root Barrier

Specified tree root barrier is a mechanical barrier and root deflector used to prevent tree roots from damaging hardscapes and landscapes. Assembled in 24" (609 mm) long modules to create varying lengths for linear applications, or perimeter surround applications in varying sizes.

A. Materials
1. The contractor shall furnish and install tree root barrier as specified. The tree root barrier shall be either product #UB 24-2 as manufactured by DeepRoot® Green Infrastructure, LLC, 530 Washington Street, San Francisco, CA, www.deeproot.com (800.458.7668).

2. Root barrier shall be recyclable, black, injection molded panels with 0.80" (2.03 mm) wall thickness in modules 24" (609 mm) long and 24" (609 mm) deep.

3. Root barrier shall be manufactured with 75% reprocessed polypropylene with added ultraviolet inhibitors.

4. Root barrier shall be comprised of 24" (60.96 cm) panels. Each panel shall have no less than four (4) Molded Integral Vertical Root Directing Ribs of a minimum 0.075" (1.90 mm) thickness, protruding 1/2" (12.7 mm) at 90° from interior of the barrier panel, spaced 6" (152.4 mm) apart. (See Details A & D)

5. Root barrier shall have a Double Top Edge consisting of two parallel, integral, horizontal ribs at the top of the panel at 0.060" (1.52 mm) thickness, 3/8" (9.53 mm) wide and 1/4" (6.35 mm) apart with the lower rib attached to the vertical Root Directing Ribs (See Detail A).

6. Root barrier shall have a minimum of twelve (12) Anti-Lift Ground Lock Tabs consisting of integral horizontal ridges of minimum 0.075" (1.90 mm) thickness in the shape of a segment of an oblong, the 2" (50.8 mm) chord of the segment joining the panel wall and the segment, protruding 3/8" (9.53 mm) from the panel. The twelve ground locks on each panel shall be about equally spaced between each of the vertical root directing ribs (Four (4) between each set of ribs, see Details B & D).

7. Root barrier shall have an integrated Zipper Joining System for assembly by sliding one panel into another (See Detail C).

U.S. Patents: 5,305,549; and 5,528,857. Other Patents Pending.

Properties	Typical Value	ASTM Test Method
Tensile strength @ yield - Wall	2.354 PSI	D638
Tensile strength @ yield - Hinge	2.846 PSI	D638
Yield Elongation - Wall	7.44%	D638
Yield Elongation - Hinge	7.01%	D638
Flexural Modulus	119.625 PSI	D790B
Notched Izod Impact - Wall	3.84 (ft-lbs)	D256A
Rockwell Hardness r. scale - Wall	84.4	D785A

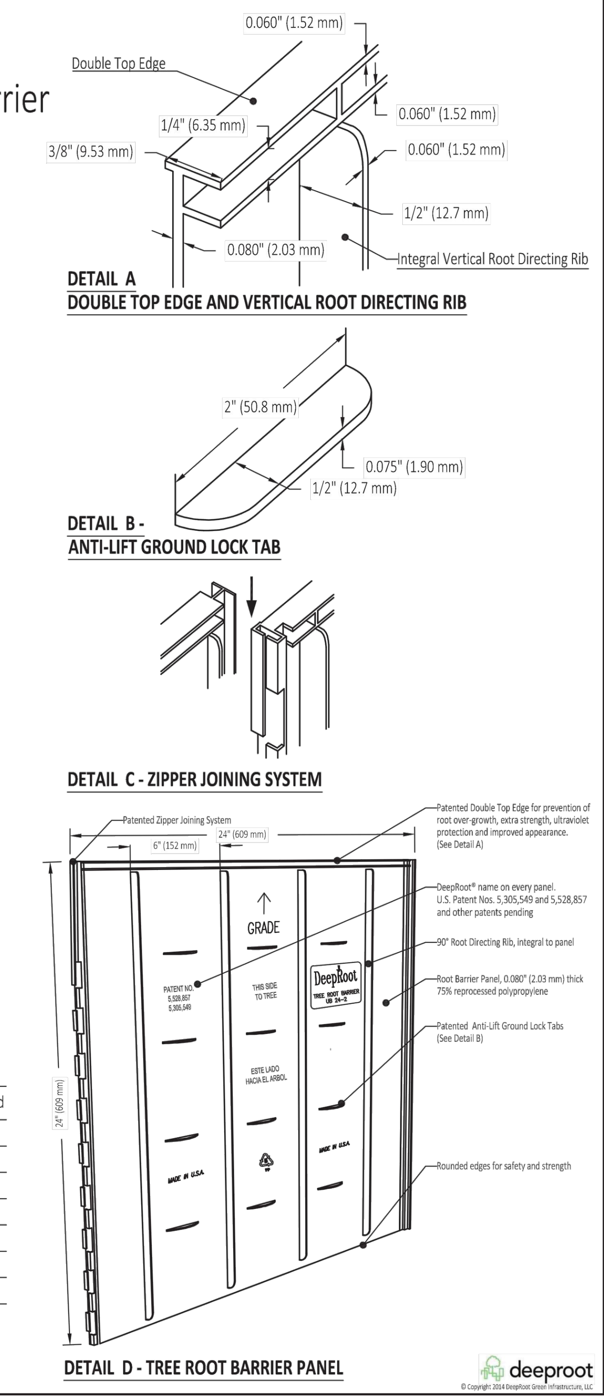

deeproot
© Copyright 2014 DeepRoot Green Infrastructure, LLC

NOTE: ROOT BARRIERS SHALL BE PLACED ALONG SIDEWALKS AND WALKWAYS WHERE ELM, GOLDENRAIN TREE, LINDEN, MAPLE, OAKS, AND SWEETGUM SHADE TREES ARE TO BE PLACED WITHIN 10' OF THE WALK.

ROOT BARRIERS SHALL BE U18-2 AND U24-2 (DEPENDING ON APPLICATION – SEE LINEAR INSTALLATION GUIDE) MANUFACTURED BY DEEPROOT, OR APPROVED EQUAL.

INSTALL ROOT BARRIERS PER MANUFACTURES INSTRUCTIONS.

FOR ONE SIDE OF TREE

EXPECTED TREE CANOPY AT MATURITY	LENGTH OF BARRIER	NUMBER OF PANELS
12' (3.6M) DIA. +2' (61CM)	14' (4.2M)	7
18' (5.5M) DIA. +2' (61CM)	20' (6.1M)	10
24' (7.3M) DIA. +2' (61CM)	26' (7.9M)	13

AS LITTLE AS ONE SIDE OF THE TREE MAY NEED GUIDES FOR ROOT DIRECTION IF THERE IS NO OTHER HARDSCAPE REQUIRING PROTECTION. LINE CAN BE SEPARATED AT ANY TWO FOOT INTERVAL.

Linear Installation

Depending upon the actual planting plan and the number of trees involved the number of panels needed will vary, but as a general rule of thumb take the anticipated mature canopy diameter of the tree and add 2 feet (61cm). This will be the length of tree root guide necessary for a linear style planting application (see chart below.)

INSTRUCTIONS

A. Choose the tree root guide that best suits the application. Generally if a sidewalk, patio or driveway is to be protected, 18"/46cm UB 18-2 is a sufficient depth. For curb and gutter protection or more aggressive roots, 24"/61cm UB 24-2 is generally the better choice.

B. Dig the trench to the depth based upon the particular tree root guide chosen.

C. Place the tree root guide in the trench with the vertical ribs facing toward the tree and align with the hardscape, if possible. Using the hardscape as a guide, backfill against the tree root guides to promote a clean, smooth fit to the paving. Be sure to keep the double top edge at least 1/2" (12.7mm) above grade to ensure roots do not grow over the top.

D. Plant the tree(s). Linear installation planting offers an expansive root growth area, but adverse soil and drainage conditions may exist in the actual planting area. Take steps to ensure healthy growth of the tree at planting. Consult with a local arborist for planting tips and recommendations.

E. If staking or guying is required we recommend using ArborTie®, a soft, safe and economical alternative to traditional wire and hose (see www.deeproot.com for details). If the tree(s) will be subject to maintenance work such as lawn mowing or weed trimming we recommend using ArborGard+® Tree Trunk Protectors to shield them from damage by weed trimmers, lawn mowers and rodents (see www.deeproot.com for details).

- For technical support contact DeepRoot toll-free at 800/458.7668 or visit us on the web at www.deeproot.com.

TO CALCULATE THE NUMBER OF LINEAR PANELS NEEDED:
Estimated diameter of the tree canopy at maturity + 2' (61cm) = Length of Tree Root Guide per side.

FOR ONE SIDE OF TREE

Expected Tree Canopy at Maturity	Length of Barrier	Number of Panels
12' (3.6m) Dia. +2' (61cm)	14' (4.2m)	7
18' (5.5m) Dia. +2' (61cm)	20' (6.1m)	10
24' (7.3m) Dia. +2' (61cm)	26' (7.9m)	13

As little as one side of the tree may need guides for root direction if there is no other hardscape requiring protection.
Line can be separated at any two foot interval.

DEEPROOT LB 12-2, UB 18-2 OR UB 24-2

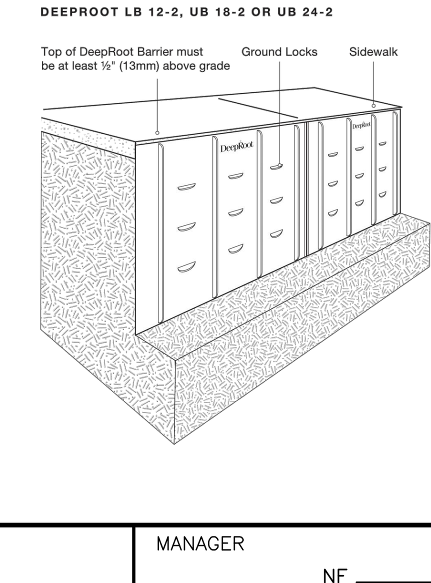

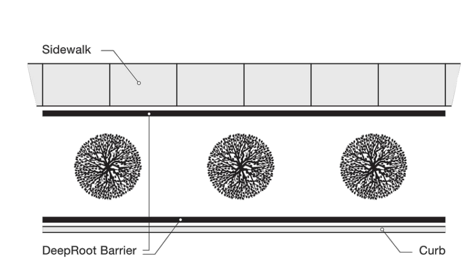

LINEAR PLANTING DETAILS

A. CURB AND GUTTER

Typical section of curb and gutter with DeepRoot Tree Root Guide inset into concrete.

Guide is installed in a trench in subgrade which is then compacted. Guide is set so that top edge will be 2" (5cm) below finish grade of curb and set flush with edge of curb. Vertical ribs face toward tree roots.

INSTALLATION INSTRUCTIONS:
1. Prepare base and subgrade.
2. Trench to appropriate depth for installation so that top of barrier is 2" (5cm) below finish grade of top of curb.
3. Place tree root guide in trench. Vertical ribs must face toward tree roots.
4. Backfill and compact to requirements.
5. Place form material against guide. (It may be nailed from the outside of the form.)

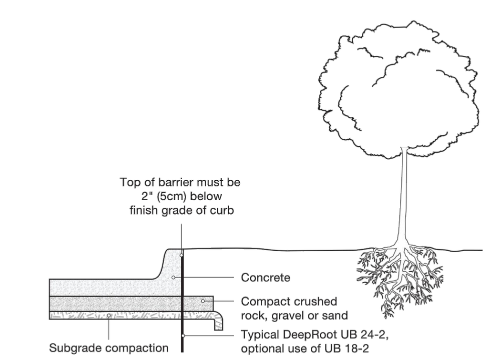

B. SIDEWALK

Typical section of sidewalk with DeepRoot Tree Root Guide inset into concrete.

Guide is installed in a trench in subgrade which is then compacted. Guide is set so that top edge will be 2" (5cm) above compacted rock, gravel or sand (or halfway between rock and finish grade of SW). Vertical ribs face toward tree roots.

INSTALLATION INSTRUCTIONS:
1. Prepare base and subgrade.
2. Trench to appropriate depth for installation of root guide so that top of guide is 2" (5cm) below finish grade of sidewalk (or halfway between top of compacted rock and finish grade of SW).
3. Place tree root guide in trench. Vertical ribs must face toward tree roots.
4. Backfill and compact to requirements.
5. Place form material against guide. (It may be nailed from the outside of the form.)

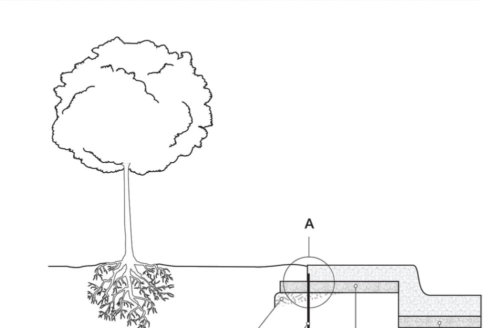

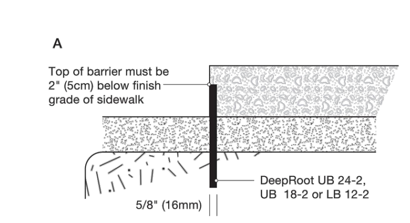

B.SIDEWALK (CONT'D)

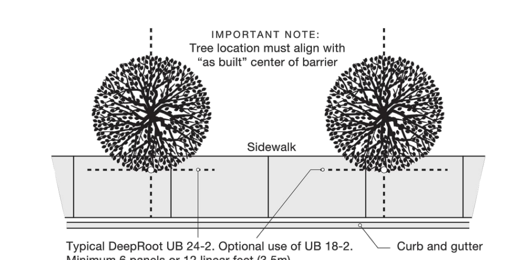

C. PAVER DETAIL

LINEAR STYLE PLANTING USING DEEPROOT AND GEOTEXTILE FABRIC WITH CONCRETE PAVERS

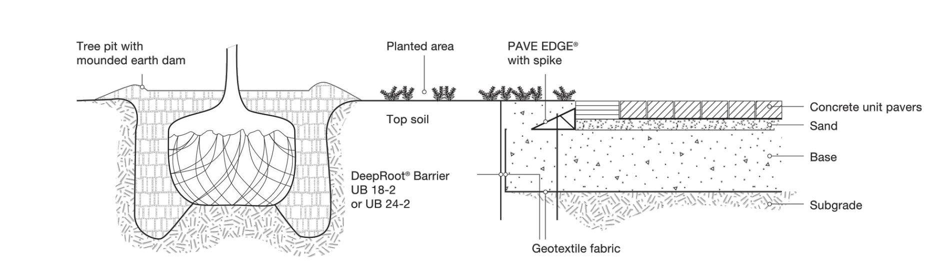

D. PARKING MEDIAN

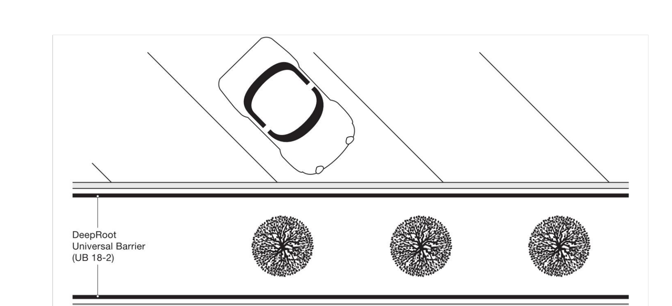

NO.	REVISION	DATE	BY
2	REVISED PER TOWNSHIP REVIEW LETTER DATED 12/11/18	1/30/19	BG
1	REVISED PER TOWNSHIP REVIEW LETTERS DATED 9/13/18 & 10/26/18	11/5/18	BG

SEAL

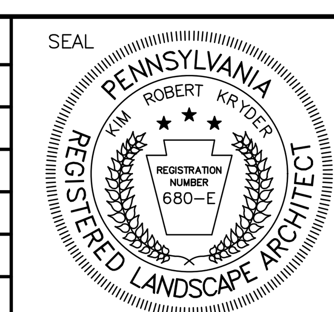

Kim R. Kryder, R.L.A.

NORTH

MANAGER NF	
DESIGN KK	CHKD. BY
DRAFT BG	CHKD. BY
FILE ROU-01	DATE 8/9/2018
NOTES	SCALE

BURSICH
Sharing your Vision

Corporate Headquarters
2129 East High Street
Pottstown, PA 19464
610-323-4040

Southampton Office
706 Lakeside Drive
Southampton, PA 18966

w w w . b u r s i c h . c o m

CLIENT
ROUSE/CHAMBERLIN, LTD
500 EXTON COMMONS
EXTON, PA 19341

SUBJECT
LANDSCAPE DETAILS

PRESERVE AT WILLISTOWN

WILLISTOWN TOWNSHIP, CHESTER COUNTY, PENNSYLVANIA

JOB NO. 187872

SHEET NO. 19 OF 26

DWG. NO. LA387872

P:\ROU-01\187872-00\dwg\LD_Plan\LA187872.dwg

© COPYRIGHT BURSICH ASSOCIATES, INC. 2018
ALL REPORTS, DOCUMENTS, SPECIFICATIONS, COMPUTER FILES, FIELD DATA, NOTES AND OTHER DOCUMENTS AND INSTRUMENTS PREPARED BY BURSICH ASSOCIATES, INC. AS INSTRUMENTS OF SERVICE SHALL REMAIN THE PROPERTY OF BURSICH ASSOCIATES, INC. AND THEREFORE SHALL RETAIN ALL COMMON LAW, STATUTORY AND OTHER RESERVED RIGHTS, INCLUDING THE COPYRIGHT THERETO. ANY USE, REUSE OR MODIFICATION/ALTERATION AND REPRODUCTION WITHOUT THE EXPRESS WRITTEN CONSENT OF BURSICH ASSOCIATES, INC. IS STRICTLY PROHIBITED. ANY USE, REUSE OR MODIFICATION/ALTERATION BY ANYONE WITHOUT WRITTEN CONSENT SHALL BE DEEMED AN AGREEMENT BETWEEN THE USER AND BURSICH ASSOCIATES, INC. WHICH SHALL INDEMNIFY AND SAVE HARMLESS BURSICH ASSOCIATES, INC. FOR ALL CLAIMS, DAMAGES, LOSSES AND EXPENSES ARISING FROM THE USE THEREFROM.

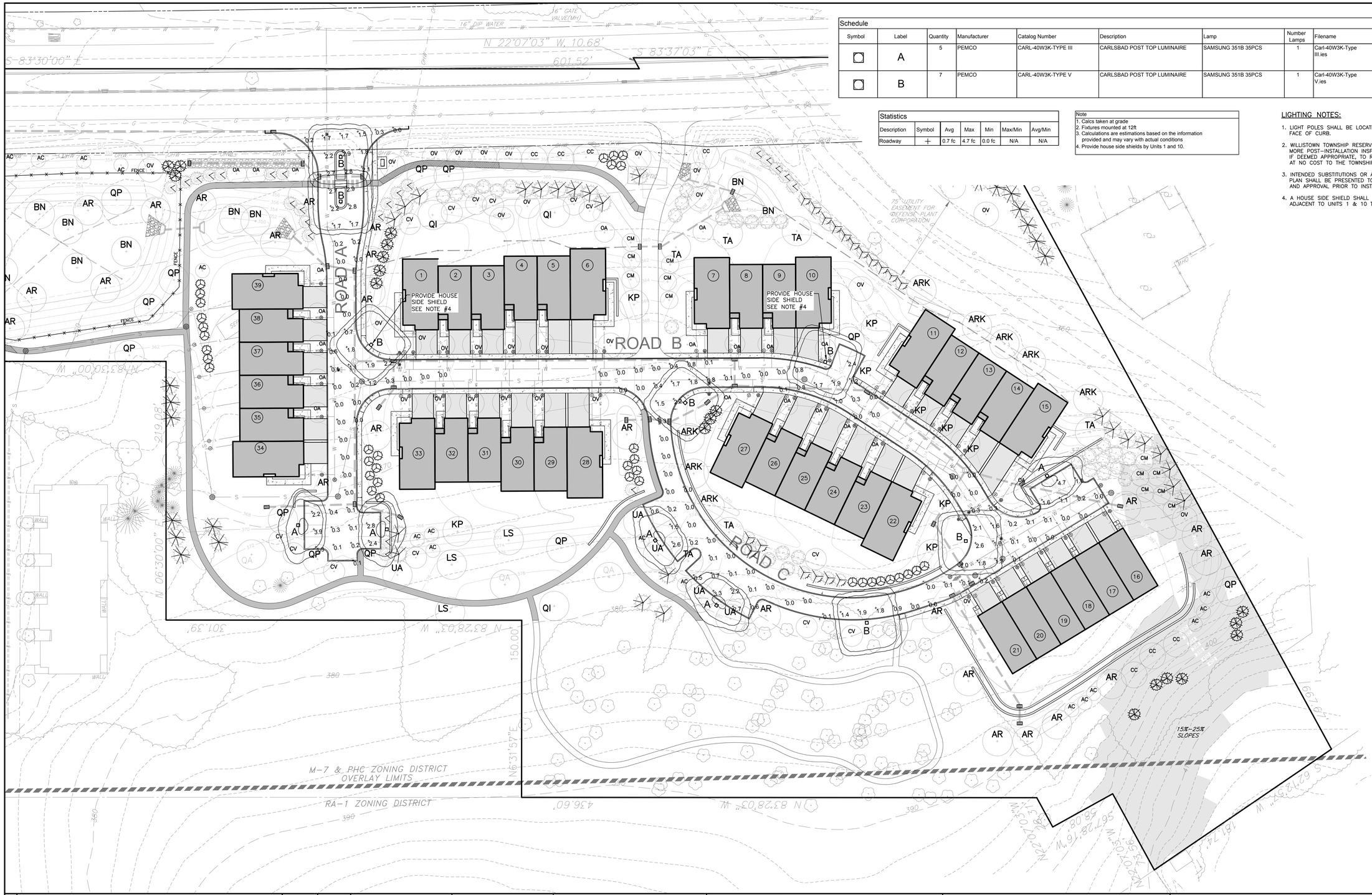

Schedule

Symbol	Label	Quantity	Manufacturer	Catalog Number	Description	Lamp	Number Lamps	Filename	Lumens Per Lamp	Light Loss Factor	Wattage
	A	5	PEMCO	CARL-40W3K-TYPE III	CARLSBAD POST TOP LUMINAIRE	SAMSUNG 351B 35PCS	1	Carl-40W3K-Type III.ies	4285	0.95	37.7
	B	7	PEMCO	CARL-40W3K-TYPE V	CARLSBAD POST TOP LUMINAIRE	SAMSUNG 351B 35PCS	1	Carl-40W3K-Type V.ies	5351	0.95	37.7

Statistics

Description	Symbol	Avg	Max	Min	Max/Min	Avg/Min
Roadway	+	0.7 fc	4.7 fc	0.0 fc	N/A	N/A

Note

1. Calcs taken at grade
2. Fixtures mounted at 12ft
3. Calculations are estimations based on the information provided and may vary with actual conditions
4. Provide house side shields by Units 1 and 10.

LIGHTING NOTES:

1. LIGHT POLES SHALL BE LOCATED A MINIMUM OF 5 FEET FROM THE FACE OF CURB.
2. WILLISTOWN TOWNSHIP RESERVES THE RIGHT TO CONDUCT ONE OR MORE POST-INSTALLATION INSPECTIONS OF INSTALLED LIGHTING AND IF DEEMED APPROPRIATE, TO REQUIRE ADDITIONAL REMEDIAL ACTION AT NO COST TO THE TOWNSHIP.
3. INTENDED SUBSTITUTIONS OR ALTERATIONS TO APPROVED LIGHTING PLAN SHALL BE PRESENTED TO WILLISTOWN TOWNSHIP FOR REVIEW AND APPROVAL PRIOR TO INSTALLATION.
4. A HOUSE SIDE SHIELD SHALL BE PROVIDED ON THE TYPE B LIGHTS ADJACENT TO UNITS 1 & 10 TO MINIMIZE REARWARD DISTRIBUTION.

EXISTING FEATURES LEGEND

SITE BENCHMARK
PROPERTY LINE
ADJOINER LINE
LEGAL RIGHT OF WAY
EASEMENT LINE
CONCRETE CURB
EDGE OF PAVE
EDGE OF DRIVE
CONTOURS
SPOT ELEVATION
WOOD LINE
TREES
SANITARY SEWER MAIN
SANITARY SEWER CLEANOUT
SANITARY SEWER MANHOLE
STORM SEWER
M&C TYPE INLETS
WATER MAIN
FIRE HYDRANT
WATER VALVE
WATER MANHOLE
GAS MAIN
GAS VALVE
OVERHEAD WIRES
UNDERGROUND WIRES
UTILITY POLE
SIGN
15-25% SLOPES
ZONING LINE
SLANTED TEXT DENOTES EXISTING FEATURE

PROPOSED LEGEND

BUILDING
ROAD CENTERLINE
DEPRESSED CURB
EDGE OF PAVING
CURB
SEWER MAIN
SEWER SERVICE LATERAL
SANITARY SEWER MANHOLE
SANITARY SEWER CLEANOUT
SANITARY SEWER STRUCTURE IDENTIFIER
STORMWATER PIPE
C&M TYPE STORMWATER INLET
HEADWALL/ENDWALL
RIP-RAP APRON
STORMWATER MANHOLE
STORMWATER STRUCTURE IDENTIFIER
WATER MAIN
WATER SERVICE LATERAL
WATER GATE VALVE
WATER SERVICE SHUTOFF
FIRE HYDRANT
SPOT ELEVATION
INTERMEDIATE CONTOUR
INDEX CONTOUR
DIRECTION OF FLOW
WOODS LINE
UNIT NUMBER
FENCE
TREE PROTECTION FENCING
ADA DETECTABLE WARNING STRIP
STREET LIGHT
VERTICAL TEXT DENOTES PROPOSED FEATURE

0 40' 80'
GRAPHIC SCALE: 1"=40'

© COPYRIGHT BURSICH ASSOCIATES, INC., 2018
ALL DRAWINGS, SPECIFICATIONS, DESIGNS, PLANS, REPORTS, MAPS, NOTES AND OTHER DOCUMENTS AND INSTRUMENTS PREPARED BY BURSICH ASSOCIATES, INC. AS INSTRUMENTS OF SERVICE SHALL REMAIN THE PROPERTY OF BURSICH ASSOCIATES, INC. AND THEREFORE SHALL RETAIN ALL COMMON LAW, STATUTORY AND OTHER RESERVED RIGHTS, INCLUDING THE COPYRIGHT. THESE DOCUMENTS SHALL NOT BE REPRODUCED, CHANGED OR COPIED IN ANY FORM OR MANNER WHATSOEVER, NOR CONVEYED TO ANY OTHER PARTY WITHOUT THE EXPRESS WRITTEN CONSENT OF BURSICH ASSOCIATES, INC. IS STRICTLY PROHIBITED. ANY USE, REUSE OR MODIFICATION WITHOUT WRITTEN VERIFICATION OR ADAPTATION BY BURSICH ASSOCIATES, INC. WILL BE AT THE USER AND THE USER AND BURSICH ASSOCIATES, INC. WHICH SHALL INDEMNIFY AND SHAL HARMLESS BURSICH ASSOCIATES, INC. FOR ALL CLAIMS, DAMAGES, LOSSES AND EXPENSES ARISING FROM THE USE THEREFROM.

NO.	REVISION	DATE	BY
2	REVISED PER TOWNSHIP REVIEW LETTER DATED 12/11/18	1/30/19	BG
1	REVISED PER TOWNSHIP REVIEW LETTERS DATED 9/13/18 & 10/26/18	11/5/18	BG

SEAL

NORTH

MANAGER NF	
DESIGN KK	CHKD. BY
DRAFT BG	CHKD. BY
FILE ROU-01	DATE 8/9/2018
NOTES	SCALE 1"=40'

BURSICH
Sharing your Vision

Corporate Headquarters
2129 East High Street
Pottstown, PA 19464
610-323-4040

Southampton Office
706 Lakeside Drive
Southampton, PA 18966

www.bursich.com

CLIENT
ROUSE/CHAMBERLIN, LTD
500 EXTON COMMONS
EXTON, PA 19341

SUBJECT
LIGHTING PLAN
PRESERVE AT WILLISTOWN
WILLISTOWN TOWNSHIP, CHESTER COUNTY, PENNSYLVANIA

JOB NO. 187872
SHEET NO. 20 OF 26
DWG. NO. LI187872

P:\ROU-01\187872-00\dwg\LD_Plan\LI187872.dwg

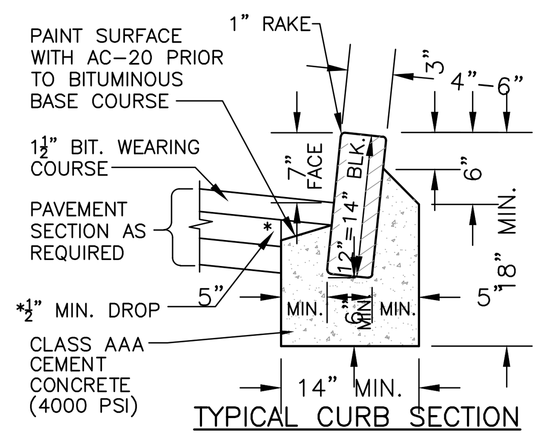

TYPICAL CURB SECTION
NO SCALE

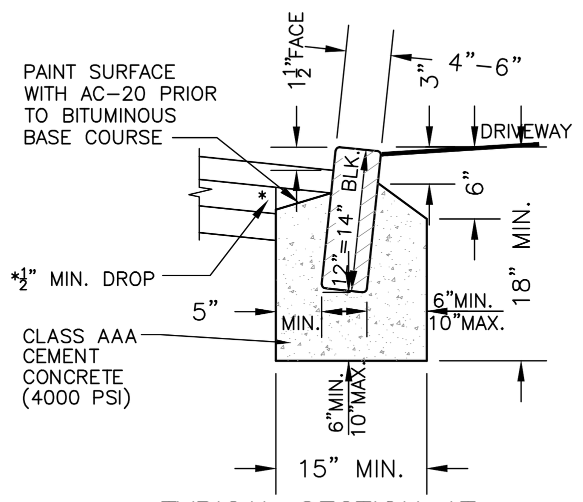

TYPICAL SECTION AT DRIVEWAY SECTION A–A
NO SCALE

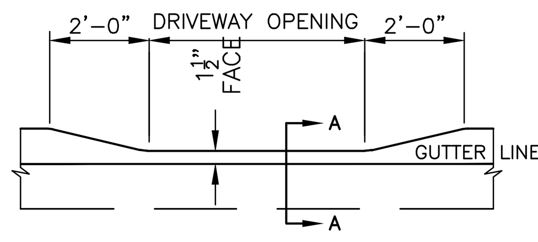

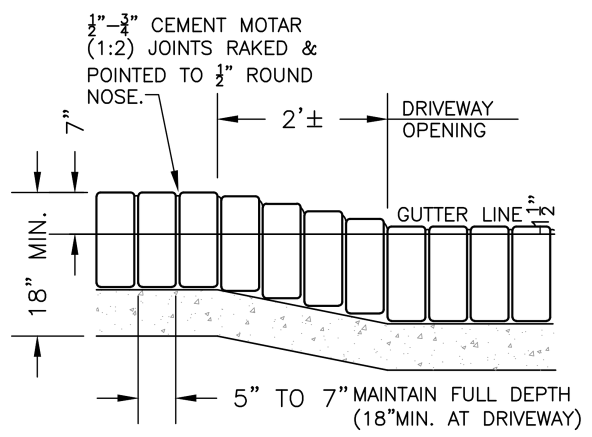

TYPICAL DEPRESSION CURB
NO SCALE

NOTE:
1. PROVIDE ½" PREFORMED BITUMINOUS FIBER EXPANSION JOINTS, TRIMMED TO CONFORM TO CURB SECTION, AT "PC" AND "PT" OF CURB RETURNS AND 20' INTERVALS ELSEWHERE
2. CONSTRUCTION SHALL BE IN ACCORDANCE W/ THE UPPER PROVIDENCE TOWNSHIP ENGINEERING AND CONSTRUCTION STANDARDS AND IMPROVEMENT PROCEDURES AND PENNDOT PUB. 408, LATEST ED., WHICHEVER IS MORE RESTRICTIVE.

BELGIAN BLOCK CURB (ALTERNATE)
NO SCALE

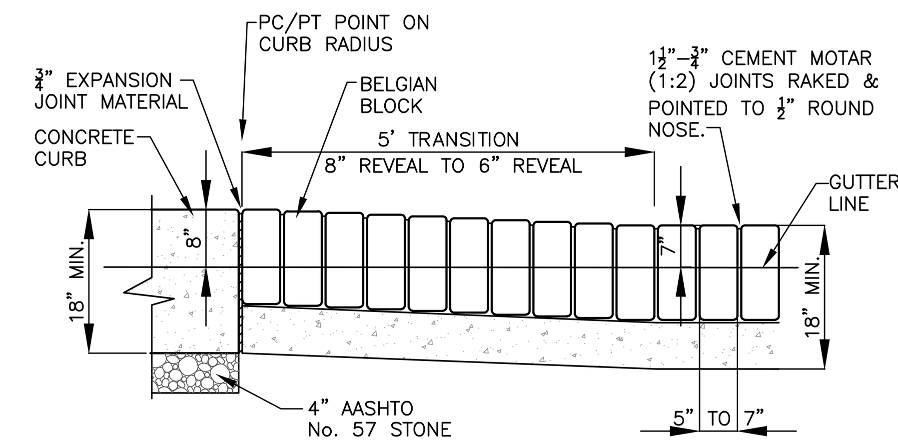

8" CONCRETE CURB TO 7" BELGIAN BLOCK CURB TRANSITION
NO SCALE

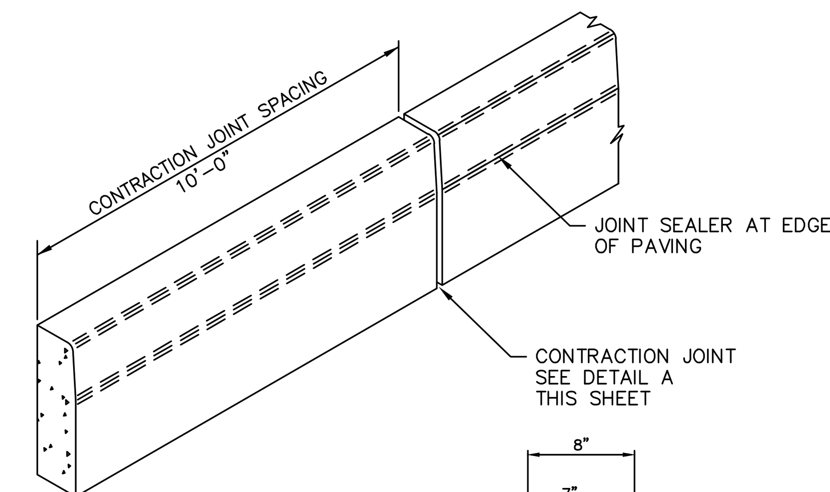

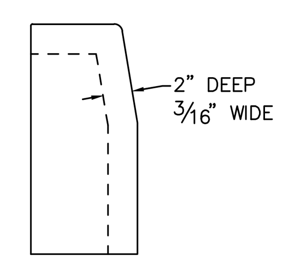

DETAIL A
CONTRACTION JOINT

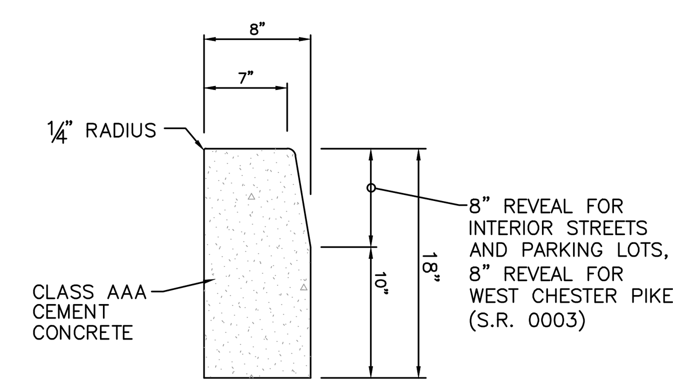

TYPICAL
CROSS SECTION

NOTES
1. 3/4" PREMOLDED EXPANSION JOINT MATERIAL SHALL BE PLACED EVERY 30 FT, AT STRUCTURES AND AT THE END OF A DAYS WORK.
2. CURB SHALL BE DOWEL PINNED INTO INLETS.
3. CONCRETE TO BE CLASS AAA, 4,000 PSI, 6% AIR ENTRAINED, MAX SLUMP 3".
4. EXTRUDED CURB SHALL BE PERMITTED UNDER THE FOLLOWING CONDITIONS.
   A. MACHINE MUST BE APPROVED BY THE TOWNSHIP ENGINEER.
   B. CONCRETE TO BE CLASS AAA, 4,000 PSI, 6% AIR ENTRAINED, MAX SLUMP 1".
   C. EXPANSION JOINTS SHALL BE EVERY 60', AT STRUCTURES, AND AT THE END OF A DAYS WORK.
   D. FULL TIME INSPECTION NECESSARY.
5. CONSTRUCTION TO BE IN ACCORDANCE WITH TOWNSHIP ENGINEERING AND CONSTRUCTION STANDARDS AND IMPROVEMENT PROCEDURES AND PennDOT PUBLICATION 408, LATEST EDITION, WHICHEVER IS MORE RESTRICTIVE.

PLAIN CEMENT CONCRETE CURB
NO SCALE

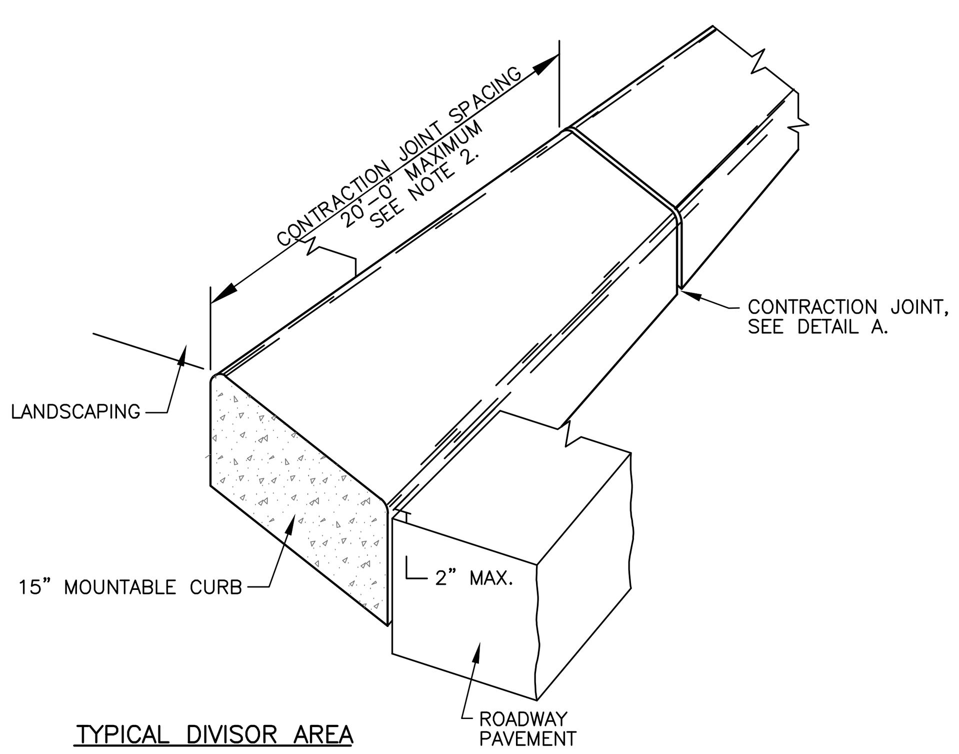

TYPICAL DIVISOR AREA

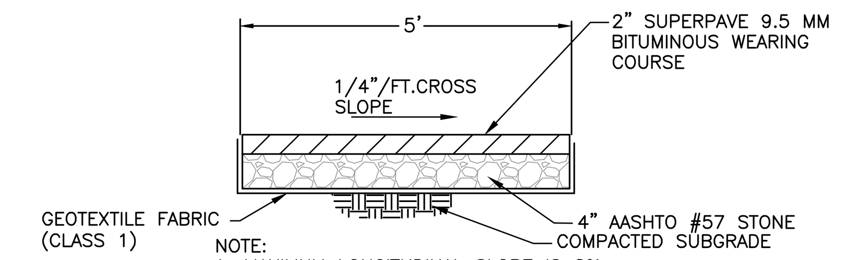

NOTE:
1. MAXIMUM LONGITUDINAL SLOPE IS 8%.

MACADAM PAVED TRAIL
NO SCALE

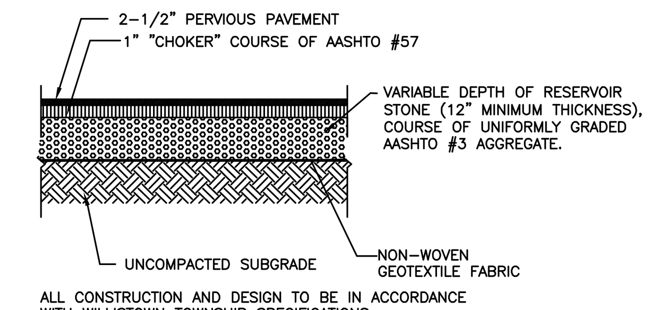

ALL CONSTRUCTION AND DESIGN TO BE IN ACCORDANCE WITH WILLISTOWN TOWNSHIP SPECIFICATIONS.

PERVIOUS PAVEMENT FOR WALKING PATH SECTION
NO SCALE

NOTES
1. PROVIDE MATERIALS AND CONSTRUCTION MEETING THE REQUIREMENTS OF PUBLICATION 408, SECTION 633.
2. INSTALL TYPE M INLET WITH CONCRETE MOUNTABLE CURBS AND LOCATE INLET AS SHOWN ON THE DRAWINGS. MAKE THE BACKSLOPE TRAVERSABLE IN THE AREA OF THE INLET AS INDICATED.
3. SPACE CONTRACTION JOINTS IN UNIFORM LENGTHS OR SECTIONS AND SEAL AS SPECIFIED IN SECTION 501.3(n), PUB. 408.
4. PLACE 3/4-INCH PREMOLDED EXPANSION JOINT FILLER MATERIAL AT STRUCTURES AND AT THE END OF THE WORK DAY. CUT MATERIAL TO CONFORM TO AREA ADJACENT TO CURB OR TO CONFORM TO CROSS SECTIONAL AREA OF CURB.
5. PROVIDE ELONGATED ISLANDS NOT LESS THAN 4'-0" WIDE AND 20'-0" LONG, EXCEPT IN SPECIAL CASES WHERE SPACE IS SEVERELY LIMITED.

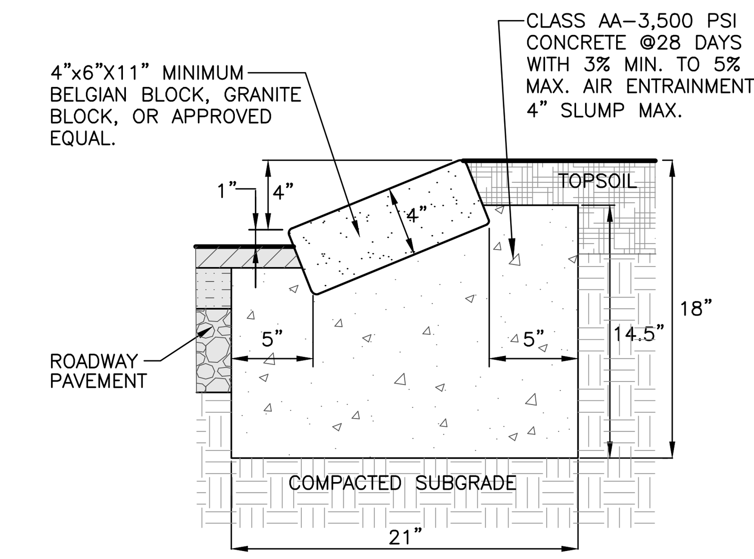

BELGIAN BLOCK MOUNTABLE CURB
NO SCALE

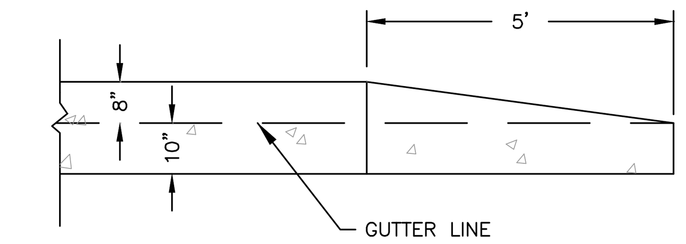

END CURB TREATMENT DETAIL
NO SCALE

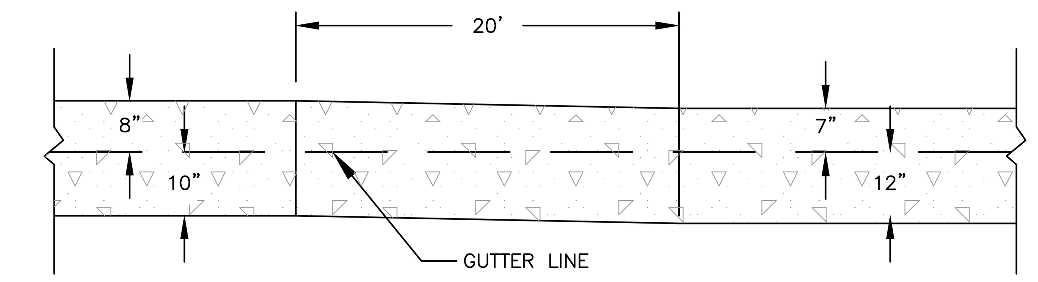

7" TO 8" REVEAL CURB TRANSITION
(FOR BELGIAN BLOCK CURB USE)
NO SCALE

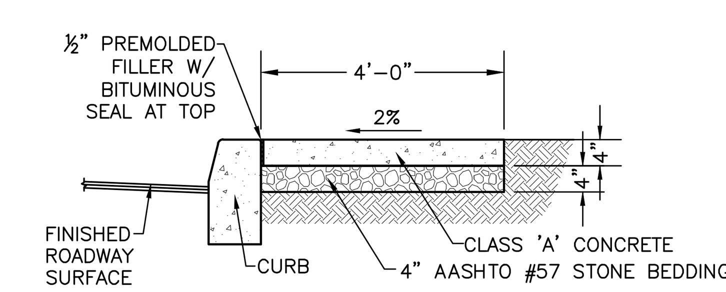

NOTE:
CONTRACTION JOINTS: SCORED AT 5' INTERVALS, UNLESS SHOWN OTHERWISE.
CONSTRUCTION JOINTS: PLACE PRE-MOLDED FILLER AT 20' MAXIMUM INTERVALS TO CORRECT ELEVATION AND PROFILE. RECESS TOP OF FILLER ONE INCH FOR SEALANT.

SIDEWALK DETAIL
NO SCALE

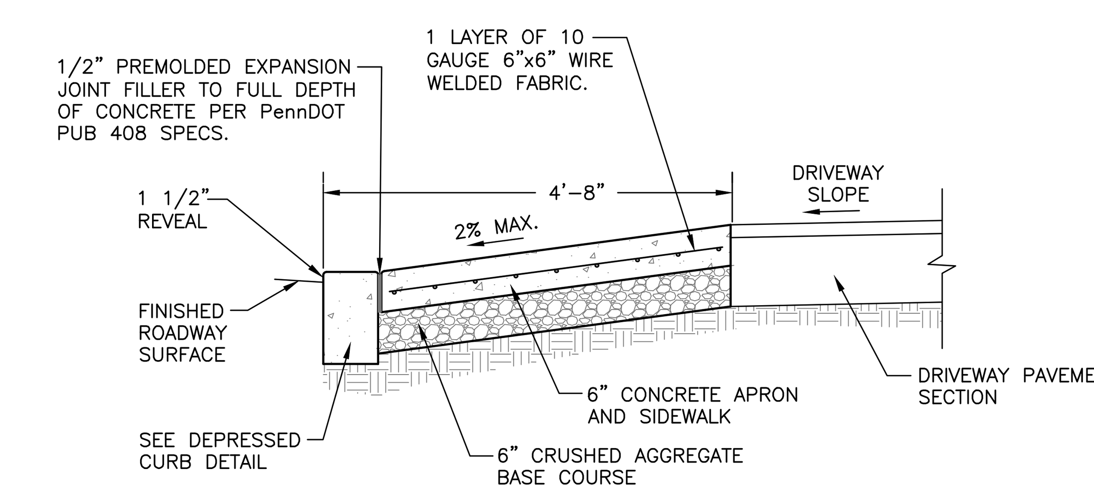

SECTION

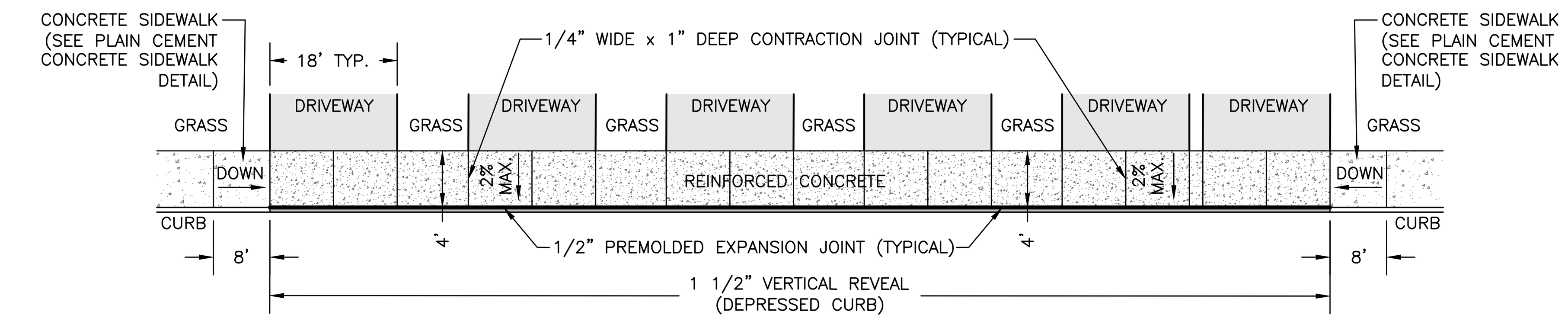

PLAN VIEW

NOTES
1. CONCRETE SHALL HAVE A MINIMUM 4,000 PSI COMPRESSIVE STRENGTH, AIR ENTRAINED WITH A MAXIMUM SUMP OF 3".
3. CONSTRUCTION SHALL BE IN ACCORDANCE WITH THE WILLISTOWN TOWNSHIP ENGINEERING AND CONSTRUCTION STANDARDS AND IMPROVEMENT PROCEDURES AND PennDOT PUBLICATION 408, LATEST EDITION, WHICH EVER IS MORE RESTRICTIVE.

INDIVIDUAL DRIVEWAY APRON DETAIL
NO SCALE

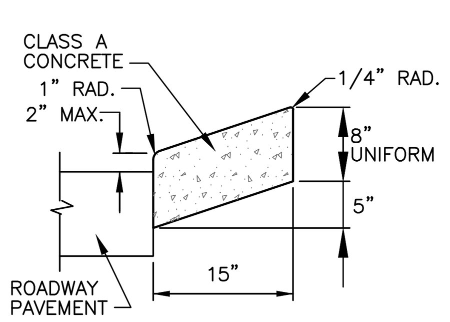

CONCRETE MOUNTABLE CURBS

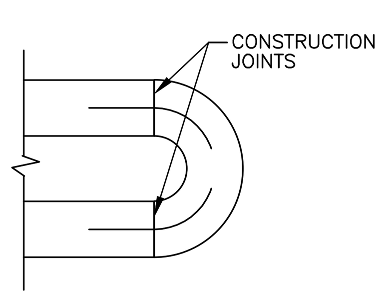

END DETAILS

NOTES
1. PROVIDE MATERIALS AND CONSTRUCTION MEETING THE REQUIREMENTS OF PUBLICATION 408, SECTION 633.
2. SPACE CONTRACTION JOINTS IN UNIFORM LENGTHS OR SECTIONS AND SEAL AS SPECIFIED IN SECTION 501.3(n), PUB. 408.
3. PLACE 3/4-INCH PREMOLDED EXPANSION JOINT FILLER MATERIAL AT STRUCTURES AND AT THE END OF THE WORK DAY. CUT MATERIAL TO CONFORM TO AREA ADJACENT TO CURB OR TO CONFORM TO CROSS SECTIONAL AREA OF CURB.

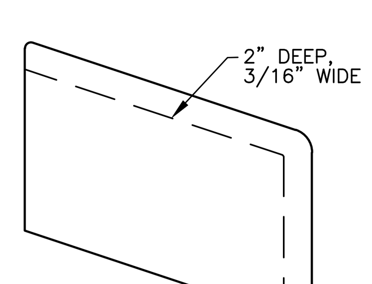

DETAIL A
CONTRACTION JOINT

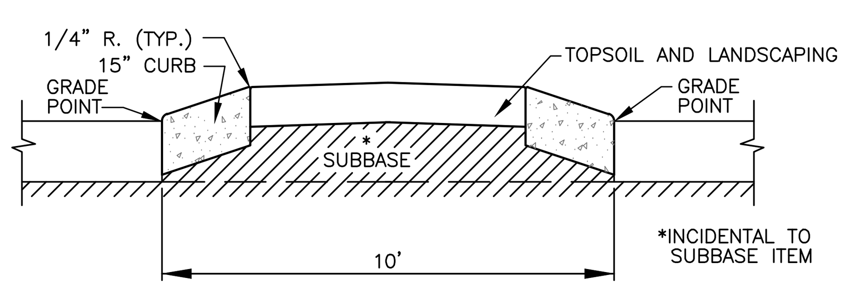

TYPICAL CONSTRUCTION

15" CONCRETE MOUNTABLE CURB
NO SCALE

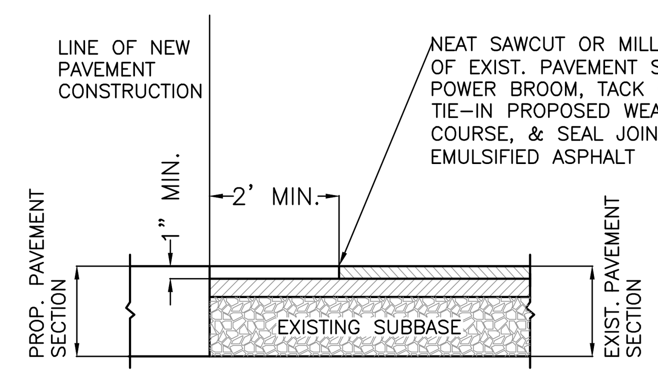

PAVEMENT TIE-IN DETAIL
NO SCALE

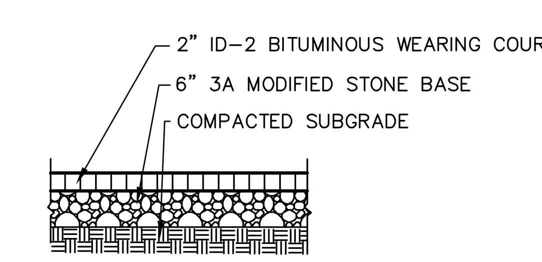

INDIVIDUAL DRIVEWAY PAVEMENT SECTION
NO SCALE

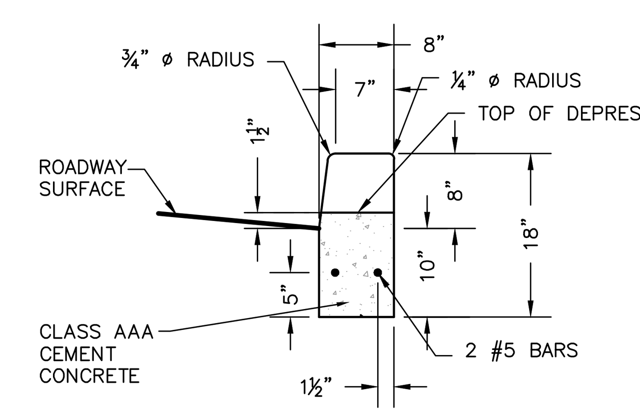

DEPRESSED CONCRETE CURB FOR DRIVEWAYS
NO SCALE

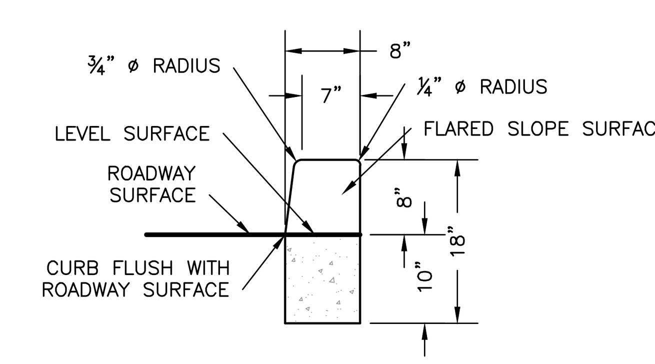

CURB DEPRESSIONS FOR ADA RAMPS
NO SCALE

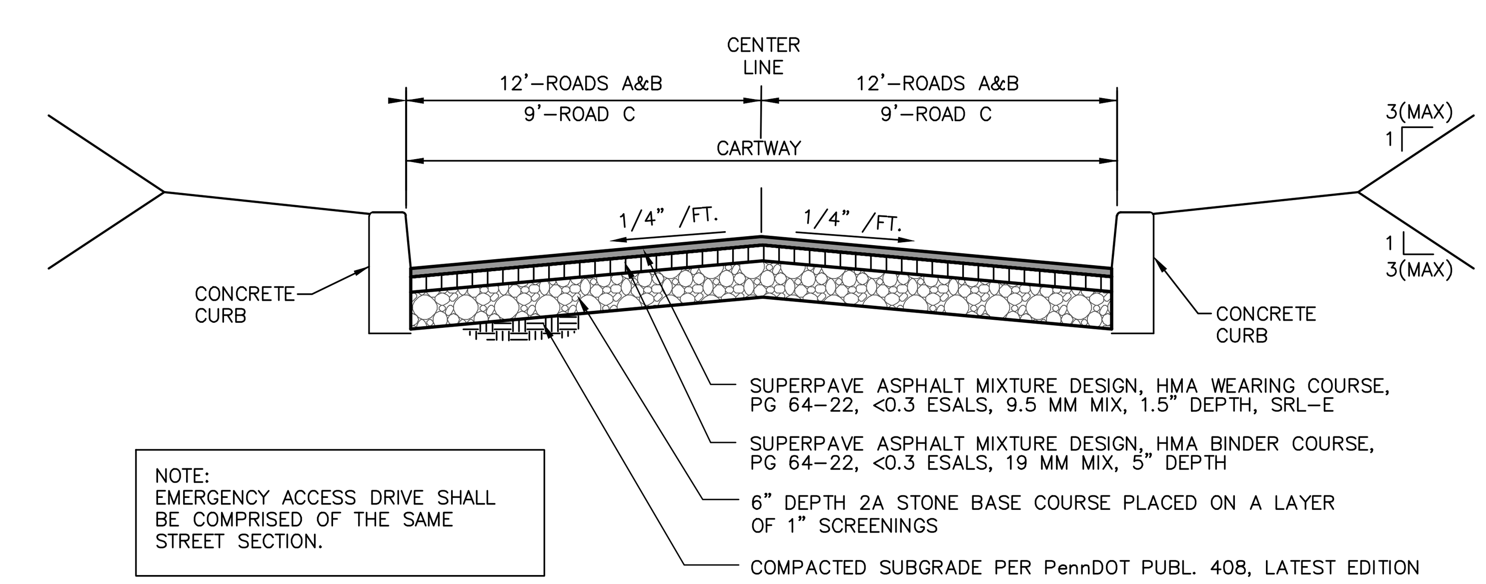

NOTE:
EMERGENCY ACCESS DRIVE SHALL BE COMPRISED OF THE SAME STREET SECTION.

STREET SECTION
NO SCALE

NO.	REVISION	DATE	BY
2	REVISED PER TOWNSHIP REVIEW LETTER DATED 12/11/18	1/30/19	BG
1	REVISED PER TOWNSHIP REVIEW LETTERS DATED 9/13/18 & 10/26/18	11/5/18	BG

SEAL

NORTH

MANAGER NF	
DESIGN KK	CHKD. BY
DRAFT BG	CHKD. BY
FILE ROU-01	DATE 8/9/2018
NOTES	SCALE AS NOTED

BURSICH
Sharing your Vision

Corporate Headquarters
2129 East High Street
Pottstown, PA 19464
610-323-4040

Southampton Office
706 Lakeside Drive
Southampton, PA 18966

www.bursich.com

CLIENT
ROUSE/CHAMBERLIN, LTD
500 EXTON COMMONS
EXTON, PA 19341

SUBJECT
CONSTRUCTION DETAILS

PRESERVE AT WILLISTOWN

WILLISTOWN TOWNSHIP, CHESTER COUNTY, PENNSYLVANIA

JOB NO. 187872

SHEET NO. 21 OF 26

DWG. NO. CD187872

P:\ROU-01\187872-00\dwg\LD_Plan\CD187872.dwg

© COPYRIGHT BURSICH ASSOCIATES, INC. 2018
ALL REPORTS, DOCUMENTS, SPECIFICATIONS, COMPUTER FILES, FIELD DATA, NOTES AND OTHER DOCUMENTS AND INSTRUMENTS PREPARED BY BURSICH ASSOCIATES, INC. AS INSTRUMENTS OF SERVICE SHALL REMAIN THE PROPERTY OF BURSICH ASSOCIATES, INC. AND THEREFORE SHALL RETAIN ALL COMMON LAW, STATUTORY AND OTHER RESERVED RIGHTS, INCLUDING THE COPYRIGHT THERETO. ANY USE, REUSE OR MODIFICATION/ALTERATION AND REPRODUCTION WITHOUT THE EXPRESS WRITTEN CONSENT OF BURSICH ASSOCIATES, INC. IS STRICTLY PROHIBITED. ANY USE, REUSE OR MODIFICATION/ALTERATION BY ANYONE WITHOUT WRITTEN CONSENT SHALL BE DEEMED AN AGREEMENT BETWEEN THE USER AND BURSICH ASSOCIATES, INC. WHICH SHALL INDEMNIFY AND SAVE HARMLESS BURSICH ASSOCIATES, INC. FOR ALL CLAIMS, DAMAGES, LOSSES AND EXPENSES ARISING FROM THE USE THEREFROM.

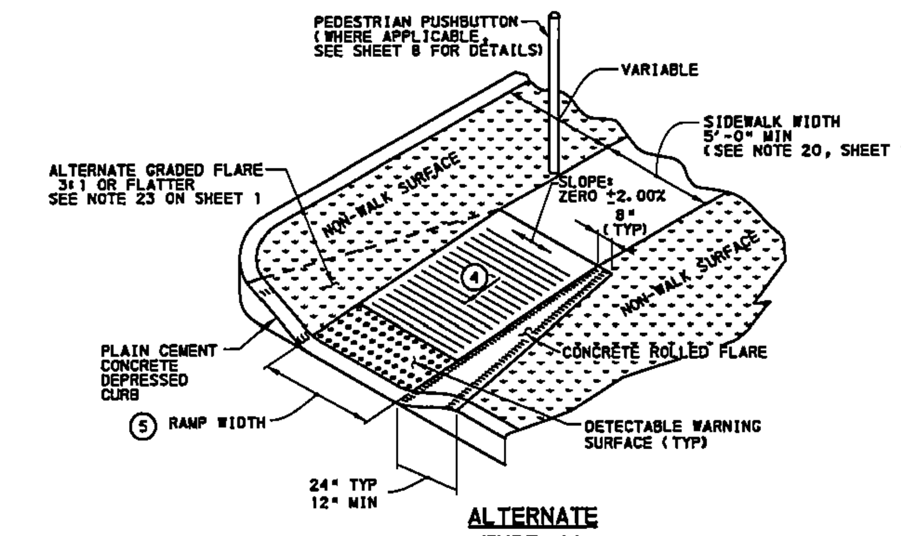

ALTERNATE TYPE 4A CURB RAMP (PARALLEL)

(1) SIDE FLARES 10.00% MAX SLOPE.

(4) 8.33% MAX RAMP SLOPE, SEE NOTE 8 SHEET 1.

(5) CURB RAMP WIDTH IS EQUAL TO SIDEWALK WIDTH WHEN THE SIDEWALK WIDTH IS GREATER THAN OR EQUAL TO THE MINIMUM 4'-0".

(6) SLOPE VARIES SEE RAMP DETAILS.

(18) CURB RAMPS REQUIRE A TURNING SPACE WITH A MAXIMUM CROSS SLOPE AND LONGITUDINAL SLOPE OF 2.00% WHERE PEDESTRIANS PERFORM TURNING MANEUVERS. SEE DETAILS FOR LOCATIONS AND DIMENSIONS.

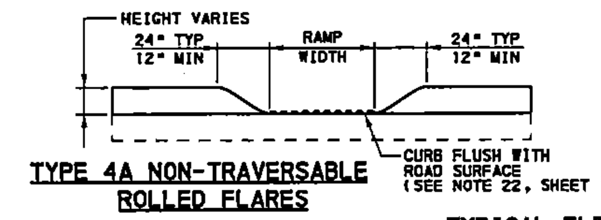

TYPE 4A NON-TRAVERSABLE ROLLED FLARES

TYPICAL ELEVATIONS FOR DEPRESSED CURBS

(1) SIDE FLARES 10.00% MAX SLOPE.

(2) IF THE TURNING SPACE IS INDICATED TO BE LESS THAN 4'-0", CONSTRUCT SIDE FLARES 8.33% MAX SLOPE.

(3) OPTIONAL ROLLED CONCRETE SURFACE OR REGRADE SLOPE CAN BE USED TO MEET THE ADJACENT SURFACES IN LIEU OF A RETURN CURB CHEEK WALL.

(4) 8.33% MAX RAMP SLOPE, SEE NOTE 8 SHEET 1.

(18) CURB RAMPS REQUIRE A TURNING SPACE WITH A MAXIMUM CROSS SLOPE AND LONGITUDINAL SLOPE OF 2.00% WHERE PEDESTRIANS PERFORM TURNING MANEUVERS. SEE DETAILS FOR LOCATIONS AND DIMENSIONS.

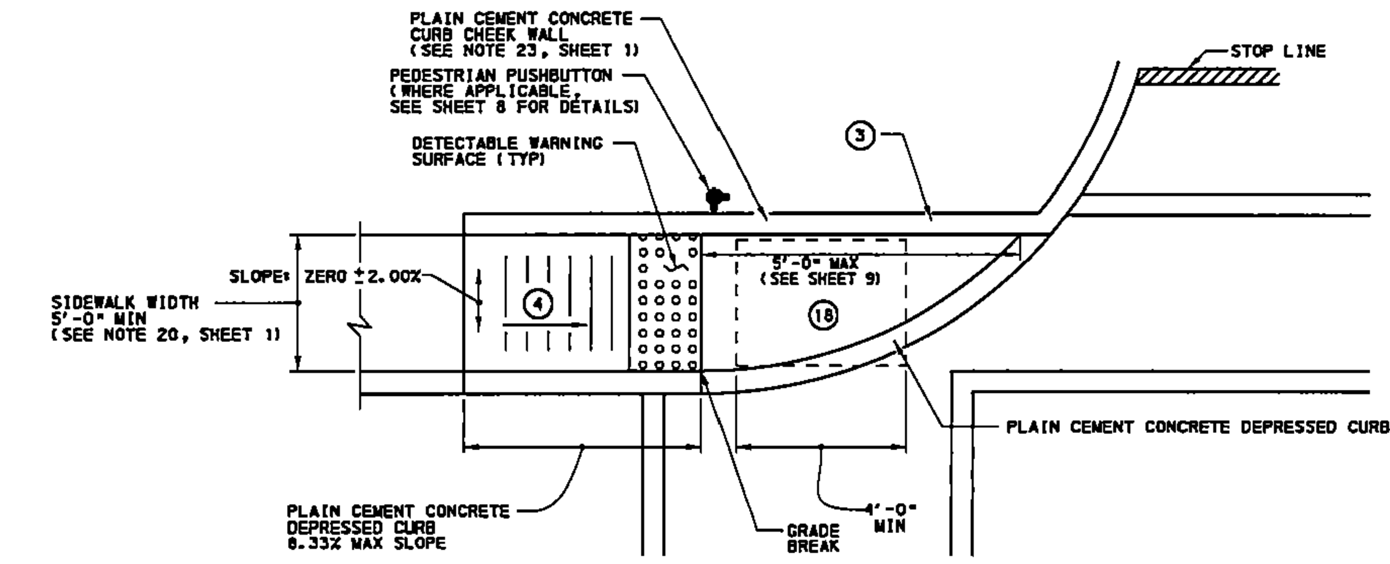

TYPE 1A CURB RAMP ASSISTANT DISTRICT EXECUTIVE APPROVAL REQUIRED IF TURNING SPACE IS NOT ENTIRELY ON SIDEWALK

LEGEND:
G – GAS
T – TELEPHONE
P – POWER
C – CABLE
S – SECONDARY

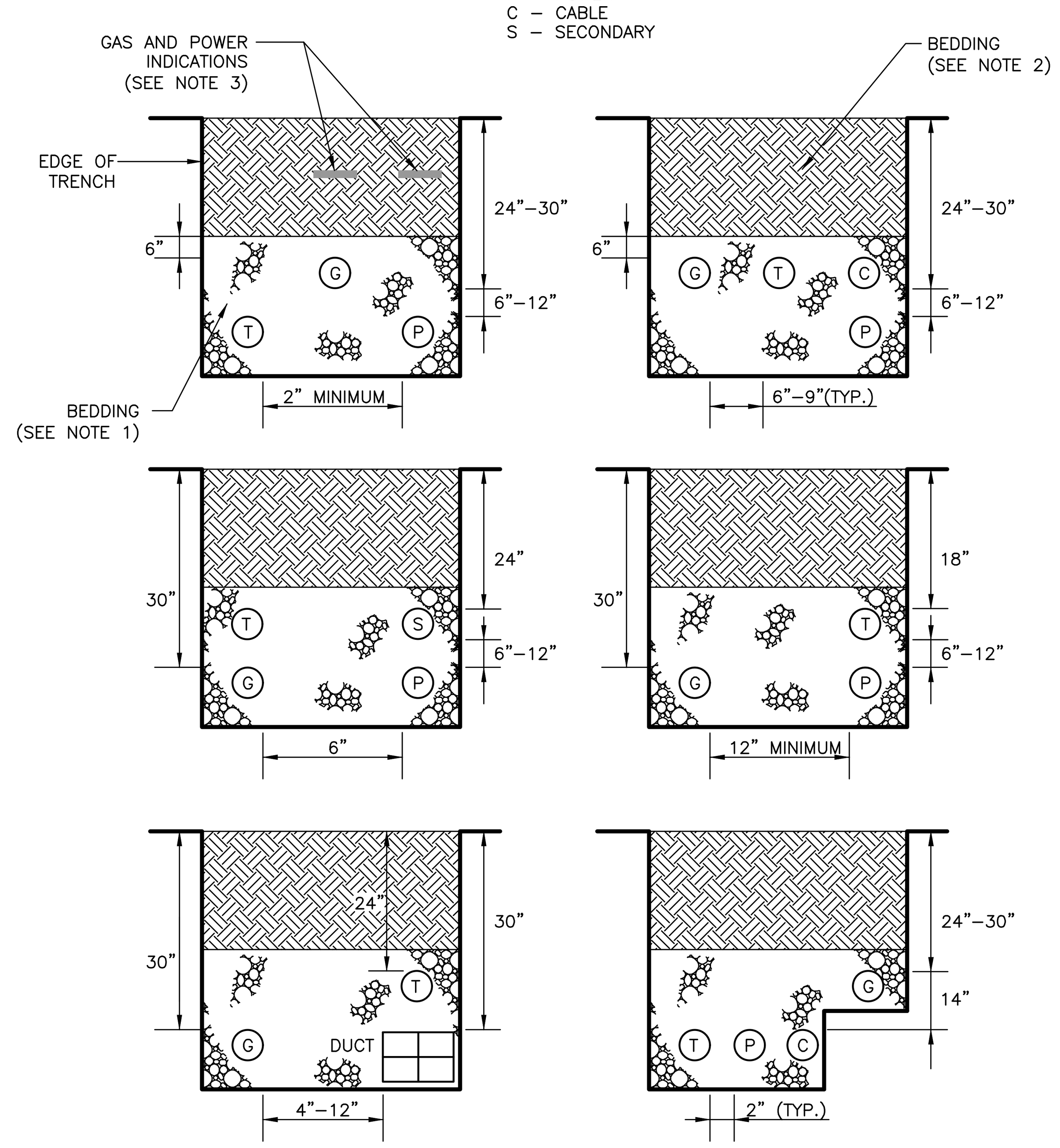

NOTES:
1. BEDDING TO BE PENNDOT 2B COARSE AGGREGATE OR EQUIVALENT.

2. BACKFILL TO BE SUITABLE MATERIAL REASONABLY FREE OF ORGANICS (SEE PENNDOT PUBLICATION 408, SECTION 206.2(a)2).

3. GAS AND/OR POWER INDICATIONS SHALL BE PLACED 12" BELOW FINISHED GRADE (TYPICAL FOR ALL TRENCHES).

COMMON UTILITY TRENCH CONFIGURATIONS
NO SCALE

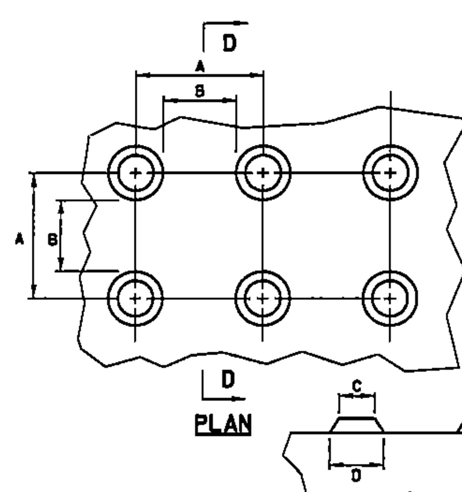

TRUNCATED DOME DIMENSIONS		
DIM	MIN mm (inch)	MAX mm (inch)
A	1.6"	2.4"
B	0.65"	1.5"
C	(13)	(13)
D	0.9"	1.4"

DETECTABLE WARNING SURFACE (DWS) TRUNCATED DOME DETAILS

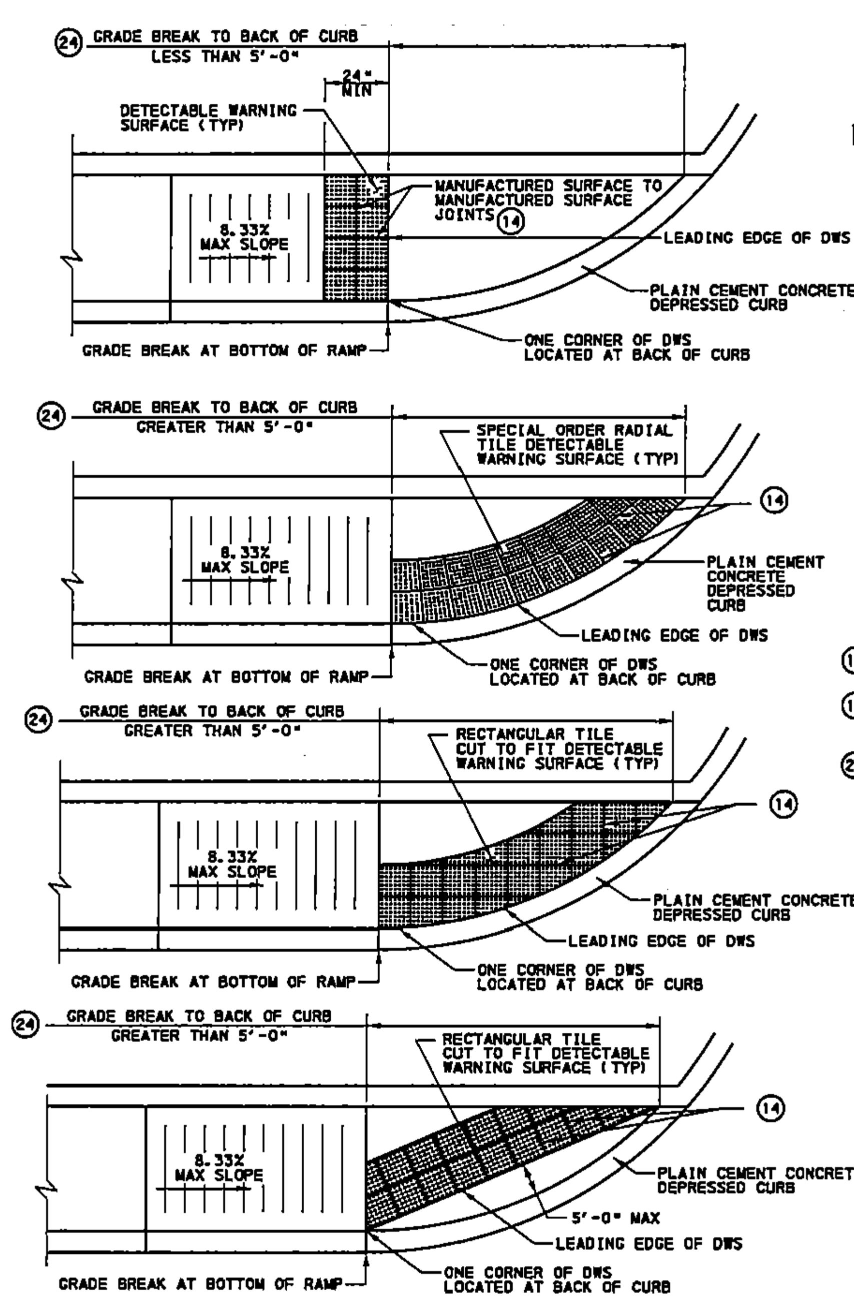

DETECTABLE WARNING SURFACE (DWS) ON CURVED SURFACES

(13) THE C DIMENSION IS 50% TO 65% OF THE D DIMENSION.

(14) PLACE ADJACENT DWS TILES WITH MANUFACTURED SURFACE TO MANUFACTURED SURFACE. CUT TILES ALONG THE PERIMETER ONLY.

(24) LOCATE ONE CORNER OF THE DWS AT THE BACK OF CURB. NO OTHER POINT ON THE LEADING EDGE OF THE DWS MAY BE MORE THAN 5'-0" AWAY FROM THE BACK OF CURB.

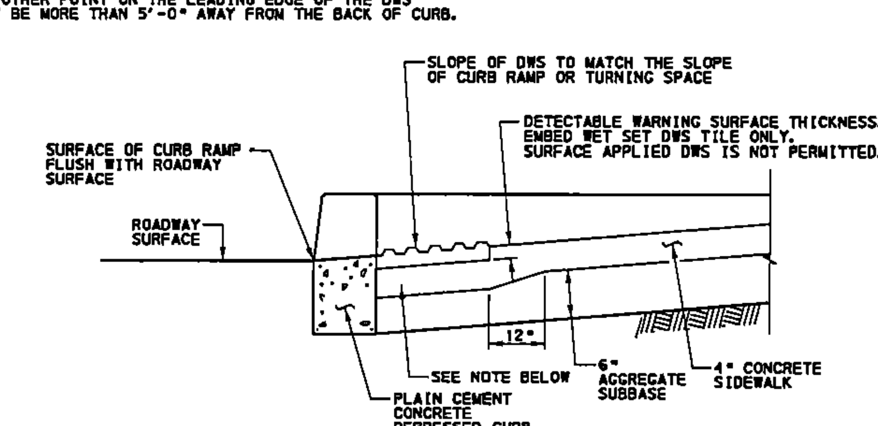

NOTES:
CONSTRUCT NOTCH AS SHOWN TO PROVIDE FULL THICKNESS SIDEWALK UNDER DETECTABLE WARNING SURFACE.

OPTIONAL: CONSTRUCT 2" MAX CONCRETE BORDER AROUND DWS TO PROVIDE PROPER INSTALLATION. SEE PEDESTRIAN PUSHBUTTON ACCESS AREAS DETAIL ON SHEET 14, FOR PLAN VIEW DETAILS.

DETECTABLE WARNING SURFACE EMBEDDING DETAIL

NOTES

1. PROVIDE MATERIALS AND CONSTRUCTION MEETING THE REQUIREMENTS OF PUBLICATION 408, SECTIONS 350, 409, 630, 676, 694, AND 695.
2. PROVIDE EXPANSION JOINT MATERIAL ½" THICK WHERE CURB RAMP ADJOINS ANY RIGID PAVEMENT, SIDEWALK OR STRUCTURE WITH THE TOP OF JOINT FILLER FLUSH WITH ADJACENT CONCRETE SURFACE.
3. CONSTRUCT CURB RAMPS WITH A MINIMUM 4'-0" X 4'-0" CLEAR SPACE BEYOND THE CURB FACE, WITHIN THE WIDTH OF THE CROSSWALK AND WHOLLY OUTSIDE THE PARALLEL VEHICLE TRAVEL LANE. SEE SHEET 7 FOR CROSSWALK DETAILS.
4. SEAL JOINTS WITH AN APPROVED SEALING MATERIAL.
5. PROVIDE SLIP RESISTANT TEXTURE ON CURB RAMP BY COARSE BROOMING TRANSVERSE TO THE SLOPE OF THE RAMP. EXTEND TEXTURE THE FULL WIDTH AND LENGTH OF THE CURB RAMP INCLUDING SIDE FLARES.
6. MODIFY CONSTRUCTION DETAILS TO ADAPT DIMENSIONS TO EXISTING CURB HEIGHTS WHERE THE CURB IS LESS THAN THE STANDARD 8" HEIGHT.
7. CURB RAMP AND SIDE FLARE LENGTHS ARE VARIABLE AND BASED ON CURB HEIGHT AND THE SIDEWALK SLOPE.
8. TO AVOID CHASING GRADE INDEFINITELY WHEN TRAVERSING THE HEIGHT OF CURB, RAMP LENGTH NOT TO EXCEED 15'-0". ADJUST RAMP SLOPE AS NEEDED TO PROVIDE ACCESS TO THE MAXIMUM EXTENT FEASIBLE.
9. NON-WALK AREA IS AN OBSTRUCTED OR GRASS/NON-PAVED AREA ADJACENT TO THE PEDESTRIAN ACCESS ROUTE THAT IS NOT USED BY THE PEDESTRIAN FOR ACCESS.
10. THE DETAILS DEPICT PEDESTRIAN PUSHBUTTON POLES TO ILLUSTRATE THE RECOMMENDED PLACEMENT OF PEDESTRIAN PUSHBUTTONS. FOR ALTERATION PROJECTS, PROVIDE ACCESS TO EXISTING PEDESTRIAN PUSHBUTTONS TO THE MAXIMUM EXTENT FEASIBLE. INSTALL PEDESTRIAN PUSHBUTTON STUB POLES, WHERE APPLICABLE, SO AS NOT TO CREATE PEDESTRIAN OBSTRUCTIONS.
11. SEE TC-8803 FOR ADDITIONAL PEDESTRIAN PUSHBUTTON DETAILS NOT SHOWN.
12. ALIGN DETECTABLE WARNING SURFACE TRUNCATED DOMES ON A SQUARE GRID IN THE PREDOMINANT DIRECTION OF THE RAMP AND PERPENDICULAR TO CURB. SEE SHEET 9 FOR INSTALLATIONS ALONG CURVED SURFACES.
13. PROVIDE DETECTABLE WARNING SURFACES (DWS) 24" MINIMUM (IN THE DIRECTION OF PEDESTRIAN TRAVEL) ACROSS FULL WIDTH OF RAMP AT THE GRADE BREAK NEAR STREET EDGE. PROVIDE DWS THAT CONTRAST VISUALLY WITH ADJACENT WALKWAY SURFACES, EITHER LIGHT-ON-DARK OR DARK-ON-LIGHT FOR THE FULL WIDTH OF RAMP.
14. FOR NEW CONSTRUCTION, DO NOT EXCEED 2.00% CROSS SLOPE ON THE CURB RAMP OR PEDESTRIAN ACCESS ROUTE.
15. FOR NEW CONSTRUCTION AND ALTERATIONS, CONSTRUCT CURB RAMP AND FLARE SLOPES WITH THE FLATTEST SLOPE POSSIBLE. THE SLOPES INDICATED IN THE DETAILS SHOW THE MAX SLOPE ALLOWABLE. SLOPES THAT EXCEED THOSE INDICATED IN THE DETAILS, OR CONTRACT DOCUMENTS AS APPLICABLE, WILL NOT BE ACCEPTED AND WILL BE RECONSTRUCTED.
16. CONSTRUCT SIDEWALKS AT A LONGITUDINAL SLOPE NOT TO EXCEED 5.00%. FOR ROADWAY PROFILE SLOPES THAT EXCEED 5.00%, CONSTRUCT PARALLEL SIDEWALKS ADJACENT TO ROADWAY AT A LONGITUDINAL SLOPE NOT TO EXCEED ROADWAY PROFILE SLOPE.
17. THE CHANGE IN GRADE AT THE BOTTOM OF THE CURB RAMP AND ADJOINING ROAD SURFACE IS NOT TO EXCEED AN ALGEBRAIC DIFFERENCE OF 13.33%. THE COUNTER SLOPE OF THE GUTTER OR ROAD AT THE FOOT OF A CURB RAMP, TURNING SPACE OR BLENDED TRANSITION IS NOT TO EXCEED 5.00%. SEE SHEET 8 FOR DETAILS.
18. THE CONSTRUCTION STANDARDS DEPICTED ARE MOST APPROPRIATE FOR NEW CONSTRUCTION. ALL CONSTRUCTION MUST MEET THE STANDARDS CONTAINED HEREIN UNLESS OTHERWISE NOTED OR DIRECTED.
19. ALL SLOPES ARE MEASURED WITH RESPECT TO A LEVEL PLANE. THEREFORE, THE LENGTH OF RAMP IS NOT SOLELY DEPENDANT ON THE HEIGHT OF CURB. (FOR EXAMPLE, A 6" CURB DOES NOT NECESSARILY MEAN A RAMP LENGTH OF 6'-0" FOR A 12:1 SLOPE.
20. SIDEWALK WIDTH MAY BE REDUCED TO 4'-0", WHEN PASSING AREAS 5'-0" X 5'-0" ARE PROVIDED EVERY 200'.
21. THE TRAVEL LANE IS DEFINED BY THE OUTSIDE EDGE OF THE WHITE PAVEMENT MARKING LINE. IF A WHITE PAVEMENT MARKING LINE DOES NOT EXIST, THE TRAVEL LANE IS DEFINED BY THE CONTRACT DOCUMENTS.
22. CONSTRUCT DEPRESSED CURB FOR CURB RAMPS FLUSH TO ADJACENT ROADWAY. GRADE EDGE OF ROAD ELEVATIONS AT THE FLOW LINE TO ENSURE POSITIVE DRAINAGE AND PREVENT PONDING. FOR LEVEL TURNING SPACES BEHIND DEPRESSED CURB, ADJUST SLOPES TO PROVIDE POSITIVE DRAINAGE. AT THE JOINT BETWEEN DEPRESSED CURB AND ROADWAYS, REMOVE EXCESS JOINT SEALER AND COVER THE SEALED AREA WITH A LIGHT APPLICATION OF DRY SAND.
23. CHEEK WALLS ARE PERMITTED WHEN ADJACENT TO NON-WALK AREAS OR ELEVATION DIFFERENCES CANNOT BE ACCOMMODATED BY FLARES OR GRADING. GRADE GRASS AREAS OR OTHER NON-WALK AREAS AT 3:1 OR FLATTER. DO NOT INSTALL CHEEK WALLS THAT INTERSECT THE PEDESTRIAN PATH.
24. CONSTRUCT TOP OF PLAIN CEMENT CONCRETE DEPRESSED CURB TO BE FLUSH WITH ADJACENT SURFACES (RAMPS, SIDEWALKS, FLARES).
25. FOR CURB RAMPS THAT LEAD TO A SINGLE CROSSWALK, THE RAMP (EXCLUDING FLARES) TO BE FULLY INSIDE OF MARKED CROSSWALK LINES. SEE SHEET 7 FOR DETAILS.
26. A 4'-0" MAXIMUM DIGITAL DISPLAY LEVEL WILL BE USED TO VERIFY THE SLOPES OF CURB RAMPS AND SIDEWALKS.
27. INSTALL DUMMY JOINTS WHERE RAMPS, TURNING SPACES, FLARES, AND SIDEWALKS ABUT.
28. CONSTRUCT DEPRESSED CURB SLOPE TO MATCH ROADWAY PROFILE AND HAVE A FLUSH CONNECTION. TRANSITION CURB RAMP CROSS SLOPE TO MATCH ROADWAY PROFILE AS GRADUALLY AS POSSIBLE. DO NOT EXCEED 3.00% PER 1'-0" CROSS SLOPE RATE OF CHANGE WHEN TRANSITIONING TO ROADWAY PROFILE.
29. DO NOT SCORE OR MAKE GROOVES ON SLOPED SURFACES. LINES SHOWN ON DETAILS ARE FOR ILLUSTRATION ONLY. SEE NOTE 5.

ADA RAMP ADDITIONAL NOTES:

1. SHOP DRAWINGS/INDIVIDUAL DESIGN PLANS FOR EACH ADA RAMP TO BE CONSTRUCTED SHALL BE PREPARED AND PROVIDED TO TOWNSHIP ENGINEER FOR REVIEW AND APPROVAL PRIOR TO CONSTRUCTION.
2. IF BELGIAN BLOCK CURB ALTERNATE IS USED, DEPRESSED CONCRETE CURBS AREA REQUIRED FOR ALL ADA RAMPS FOR THE TRANSITIONS AND DEPRESSED CURB SECTIONS.

© COPYRIGHT BURSICH ASSOCIATES, INC. 2018
ALL REPORTS, DOCUMENTS, SPECIFICATIONS, COMPUTER FILES, FIELD DATA, NOTES AND OTHER DOCUMENTS AND INSTRUMENTS PREPARED BY BURSICH ASSOCIATES, INC. AS INSTRUMENTS OF SERVICE SHALL REMAIN THE PROPERTY OF BURSICH ASSOCIATES, INC. AND THEREFORE SHALL RETAIN ALL COMMON LAW, STATUTORY AND OTHER RESERVED RIGHTS, INCLUDING THE COPYRIGHT THERETO. ANY USE, REUSE OR MODIFICATION/ALTERATION AND REPRODUCTION WITHOUT THE EXPRESS WRITTEN CONSENT OF BURSICH ASSOCIATES, INC. IS STRICTLY PROHIBITED. ANY USE, REUSE OR MODIFICATION/ALTERATION BY ANYONE WITHOUT WRITTEN CONSENT SHALL BE DEEMED AN AGREEMENT BETWEEN THE USER AND BURSICH ASSOCIATES, INC. WHICH SHALL INDEMNIFY AND SAVE HARMLESS BURSICH ASSOCIATES, INC. FOR ALL CLAIMS, DAMAGES, LOSSES AND EXPENSES ARISING FROM THE USE THEREFROM.

NO.	REVISION	DATE	BY
2	REVISED PER TOWNSHIP REVIEW LETTER DATED 12/11/18	1/30/19	BG
1	REVISED PER TOWNSHIP REVIEW LETTERS DATED 9/13/18 & 10/26/18	11/5/18	BG

SEAL

NORTH

MANAGER NF	
DESIGN KK	CHKD. BY
DRAFT BG	CHKD. BY
FILE ROU-01	DATE 8/9/2018
NOTES	SCALE AS NOTED

BURSICH
Sharing your Vision

Corporate Headquarters
2129 East High Street
Pottstown, PA 19464
610-323-4040

Southampton Office
706 Lakeside Drive
Southampton, PA 18966

www.bursich.com

CLIENT
ROUSE/CHAMBERLIN, LTD
500 EXTON COMMONS
EXTON, PA 19341

SUBJECT
CONSTRUCTION DETAILS
PRESERVE AT WILLISTOWN
WILLISTOWN TOWNSHIP, CHESTER COUNTY, PENNSYLVANIA

JOB NO. 187872
SHEET NO. 22 OF 26
DWG. NO. CD287872

P:\ROU-01\187872-00\dwg\LD_Plan\CD187872.dwg

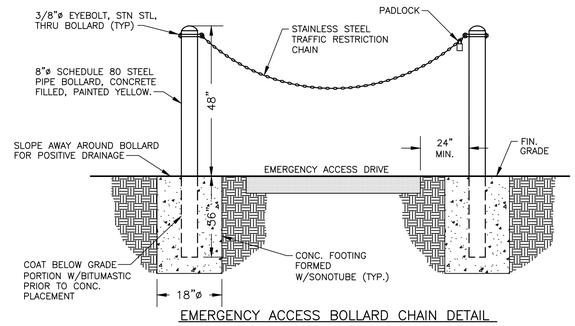

EMERGENCY ACCESS BOLLARD CHAIN DETAIL

DIMENSIONS – IN					
SIGN SIZE A x B	C	D	E	F	G
VAR. x 6"	4*	1	3*	2	1
VAR. x 9"	6*	1.5	4.5*	3	1.4
VAR. x 12"	8*	2	6*	4	2

LEGEND WHITE (REFLECTORIZED)
BACKGROUND GREEN (REFLECTORIZED)

* CHOOSE UPPER/LOWER CASE CLEARVIEWHWY FONT FOR BEST FIT.
NOTE:
WHEN DESCENDING LOWER-CASE LEGEND (E.G., g,j,p,q and y) CANNOT BE ACCOMMODATED ON A STANDARD SIZE SIGN BLANK; THE HEIGHT OF THE BLANK SHOULD BE INCREASED TO ACCOMMODATE THESE LETTERS.

STREET NAME SIGN (D3-1)
NO SCALE

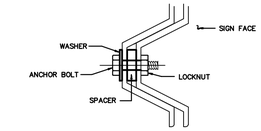

SECTION A-A

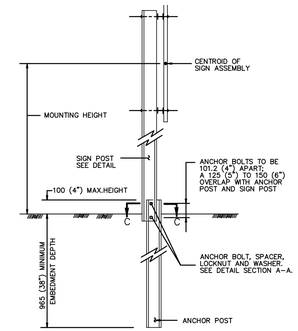

BREAKAWAY SIGN POST (TYPE B) DETAIL

1. TO BE USED FOR ALL NEW SIGN INSTALLATIONS
2. REFER TO PENNDOT PUB. 111M, TC-8600 STANDARD DETAILS FOR ADDITIONAL APPLICABLE INFORMATION.

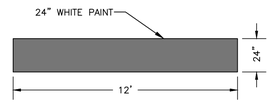

STOP BAR
NO SCALE

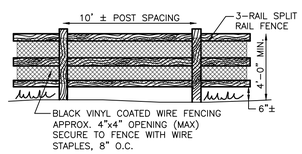

4 FT. HIGH STORWATER BASIN POST AND RAIL FENCE DETAIL
NO SCALE

LEGEND AND BORDER – WHITE (REFLECTORIZED)
BACKGROUND – RED (REFLECTORIZED)

R1-1 STOP SIGN
30"X30"
NO SCALE

LEGEND AND BORDER – BLACK (NON-REFLECTORIZED)
BACKGROUND – WHITE (REFLECTORIZED)

R2-1 SPEED LIMIT SIGN
24"X30"
NO SCALE

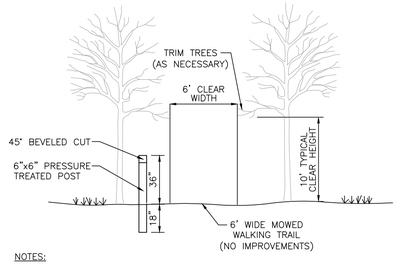

NOTES:

1. THE WALKING TRAIL SHALL BE MAINTAINED BY THE HOA.
2. MAINTENANCE SHALL INCLUDE:
   A. INSPECT TRAILS QUARTERLY FOR EROSION AND REPAIR AS NECESSARY.
   B. REMOVAL OF INVASIVE SPECIES AS NEEDED.
   C. MOWING AS NEEDED (MOST OF CUTTING CAN BE COMPLETED BY A WEEDWHIP OR PRUNERS).
   D. MOWING OF BRUSH SHALL BE RESTRICTED TO THE DESIGNATED TRAIL ROUTE.
   E. TREES SHALL BE INSPECTED ANNUALLY (AT A MINIMUM) AND TRIMMED PER THE DETAIL, ADDITIONAL TRIMMING AS NECESSARY TO MAINTAIN CLEAR WIDTH/HEIGHT.
3. TRAIL MARKERS SHALL BE INSTALLED PRIOR TO THE ISSUANCE OF THE FIRST USE AND OCCUPANCY PERMIT FOR ANY LOT.
4. TRAIL MARKERS SHALL BE INSTALLED IN LOCATIONS AT KEY POINTS ALONG THE TRAIL UPON REVIEW WITH THE APPROPRIATE TOWNSHIP REPRESENTATIVES.
5. TRAIL MARKERS SHALL INCLUDE APPROPRIATE SIGNAGE DEPICTING ICONS FOR THE PROPOSED USES. SHOP DRAWINGS SHALL BE SUBMITTED PRIOR TO INSTALLATION.

NATURAL WALKING TRAIL DETAIL
NO SCALE

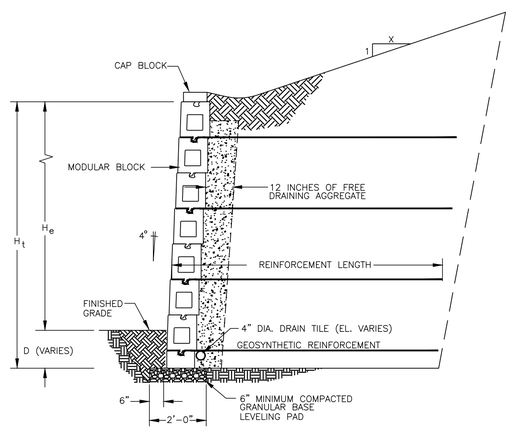

NOTE:
1. RETAINING WALL MANUFACTURER SHALL BE APPROVED BY THE DEVELOPER.
2. SHOP DRAWING WITH SEALED STRUCTURAL CALCULATIONS SHALL BE SUBMITTED AND APPROVED BY THE TOWNSHIP ENGINEER FOR WALLS OVER 4' IN HEIGHT.

TYPICAL MODULAR BLOCK RETAINING WALL
NO SCALE

LEGEND – WHITE (REFLECTORIZED)
BACKGROUND – RED (REFLECTORIZED)

R5-1 DO NOT ENTER SIGN
30"X30"
NO SCALE

ARROW AND BORDER WHITE (REFLECTORIZED)
BACKGROUND AND LEGEND BLACK (NON-REFLECTORIZED)

R6-1L ONE WAY SIGN
36"X12"
NO SCALE

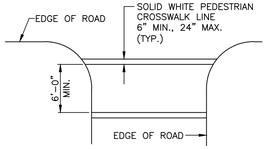

TYPE A – PARALLEL CROSSWALK STRIPING DETAIL
NO SCALE

CROSSWALK NOTE
SEE PENNDOT PUBLICATION 72M, RC-67M FOR PLACEMENT OF CROSSWALKS AT WHEELCHAIR RAMPS.

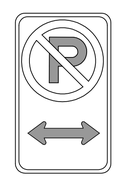

P
LEGEND, BORDER, CIRCLE, AND DIAGONAL BACKGROUND BLACK (NON-REFLECTORIZED)
RED (REFLECTORIZED)
WHITE (REFLECTORIZED)

R7-302 NO PARKING/ARROW SIGN
12"X18"
NO SCALE

ARROW AND BORDER WHITE (REFLECTORIZED)
BACKGROUND AND LEGEND BLACK (NON-REFLECTORIZED)

R6-1R ONE WAY SIGN
36"X12"
NO SCALE

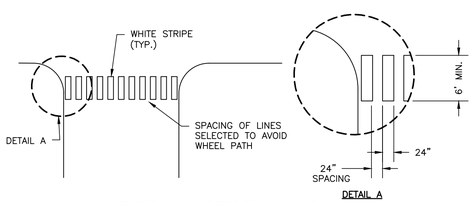

TYPE C – PERPENDICULAR CROSSWALK STRIPING DETAIL
NO SCALE

CROSSWALK NOTE
SEE PENNDOT PUBLICATION 72M, RC-67M FOR PLACEMENT OF CROSSWALKS AT WHEELCHAIR RAMPS.

NO.	REVISION	DATE	BY
2	REVISED PER TOWNSHIP REVIEW LETTER DATED 12/11/18	1/30/19	BG
1	REVISED PER TOWNSHIP REVIEW LETTERS DATED 9/13/18 & 10/26/18	11/5/18	BG

SEAL

NORTH

MANAGER NF	
DESIGN KK	CHKD. BY
DRAFT BG	CHKD. BY
FILE ROU-01	DATE 8/9/2018
NOTES	SCALE AS NOTED

BURSICH
Sharing your Vision

Corporate Headquarters
2129 East High Street
Pottstown, PA 19464
610-323-4040

Southampton Office
706 Lakeside Drive
Southampton, PA 18966

www.bursich.com

CLIENT
ROUSE/CHAMBERLIN, LTD
500 EXTON COMMONS
EXTON, PA 19341

SUBJECT
CONSTRUCTION DETAILS
PRESERVE AT WILLISTOWN
WILLISTOWN TOWNSHIP, CHESTER COUNTY, PENNSYLVANIA

JOB NO. 187872
SHEET NO. 23 OF 26
DWG. NO. CD387872

© COPYRIGHT BURSICH ASSOCIATES, INC., 2018
THE PLANS, SPECIFICATIONS, DRAWINGS, REPORTS, DESIGNS, NOTES AND OTHER DOCUMENTS AND INSTRUMENTS PREPARED BY BURSICH ASSOCIATES, INC. AS INSTRUMENTS OF SERVICE SHALL REMAIN THE PROPERTY OF BURSICH ASSOCIATES, INC. AND THEREFORE SHALL RETAIN ALL COMMON LAW, STATUTORY AND OTHER RESERVED RIGHTS, INCLUDING THE COPYRIGHT THEREIN. THE PLANS, SPECIFICATIONS, DESIGNS, REPORTS AND OTHER DOCUMENTS WITHOUT THE EXPRESS WRITTEN CONSENT OF BURSICH ASSOCIATES, INC. IS STRICTLY PROHIBITED. ANY USE, REUSE OR MODIFICATION WITHOUT SUCH WRITTEN CONSENT SHALL BE AT THE USER'S SOLE RISK AND WITHOUT LIABILITY TO THE USER AND BURSICH ASSOCIATES, INC. WHICH SHALL INDEMNIFY AND SAVE HARMLESS BURSICH ASSOCIATES, INC. FOR ALL CLAIMS, DAMAGES, LOSSES AND EXPENSES ARISING FROM THE USE THEREFROM.

P:\ROU-01\187872-00\dwg\LD_Plan\CD187872.dwg

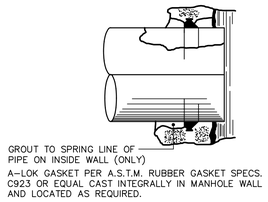

NEW MANHOLE

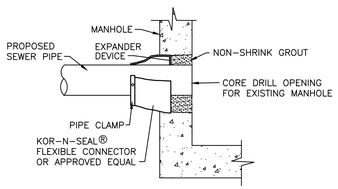

CORE DRILL EXISTING MANHOLE

MANHOLE WALL PENETRATION DETAILS

NOT TO SCALE

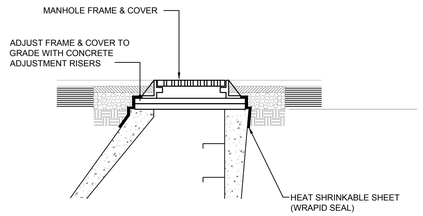

MANHOLE FRAME AND COVER ADJUSTMENT DETAIL S-20

SCALE: NONE

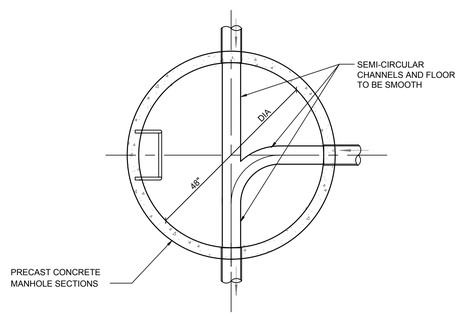

NOTE:

1. ALL FLOW CHANNELS SHALL BE PRE-CAST BY MANUFACTURER UNLESS AUTHORIZED BY ENGINEER

MANHOLE BASE TYPICAL CHANNEL CONFIGURATION S-17

SCALE: NONE

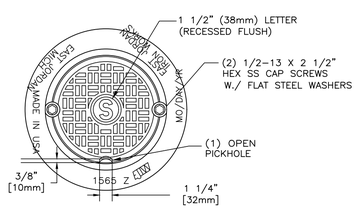

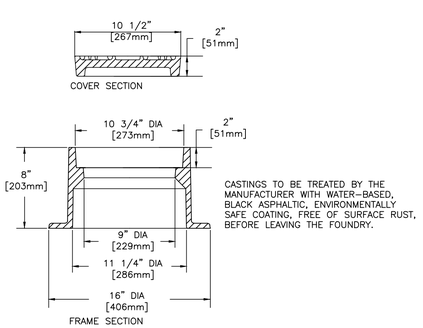

CLEANOUT FRAME AND COVER ASSEMBLY

NOT TO SCALE

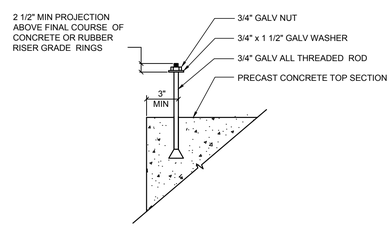

NOTE: FOUR (4) BOLTS REQUIRED PER MANHOLE.

MANHOLE FRAME - ANCHOR BOLT DETAIL S-16

SCALE: NONE

LATERAL NOTES:

1. ALL MATERIAL USED FOR LATERAL INSTALLATIONS SHALL BE NEW, FREE FROM DEFECTS AND CONFORM TO ALL STANDARDS SET FORTH BY A.P.I.
2. ALL LATERALS MUST BE INSPECTED BEFORE BACKFILLING. COMPLETED DRAWINGS SHOWING THE EXACT LOCATION AND DEPTH OF LINE SHALL BE SUBMITTED TO A.P.I. DURING FINAL INSPECTION OR THE LATERAL WILL NOT BE AUTHORIZED TO USE.
3. ALL FEES MUST BE PAID IN PROPER AMOUNT BEFORE A CONNECTION PERMIT WILL BE ISSUED.

MATERIAL ALLOWED BY A.P.I. FOR BUILDING GRAVITY SEWERS S-3

1. PVC BELL AND SPIGOT SEWER PIPE / SDR 35.
2. 4" @ 1/4" / FT. MIN. GRADE
   6" @ 1/8" / FT. MIN. GRADE

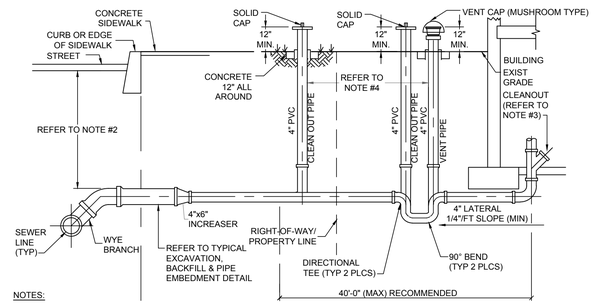

NOTES:

1. 4" SINGLE RUNNING TRAP WILL BE INSTALLED WITHIN ONE PIPE LENGTH OF THE END OF THE 6" LATERAL.
2. MINIMUM DEPTH OF 4" LATERAL WILL BE 48" BELOW FINISHED GRADE UNLESS APPROVED BY ENGINEER.
3. IF THERE IS NOT A CLEANOUT LOCATED INSIDE OF DWELLING AN ADDITIONAL CLEANOUT SHALL BE INSTALLED IMMEDIATELY OUTSIDE OF THE BUILDING PRIOR TO RUNNING TRAP
4. LOCATE VENT CAP AND CLEANOUT IN LAWN AREA. MUSHROOM CAP SHALL BE USED ON VENT.
5. IN GENERAL, SANITARY SEWERS SHOULD BE LOCATED AT LEAST 100 FEET FROM PUBLIC WATER SUPPLY SOURCES AND 50 FEET FROM PRIVATE WATER SUPPLY SOURCES, UNLESS THE SANITARY LINES ARE ENCASED IN CONCRETE OR APPROVED EQUIVALENT.
6. REFER TO DRAWING S- 3 FOR LATERAL NOTES.

TYPICAL BUILDING SEWER S-1

SCALE: NONE

GENERAL NOTES – SANITARY SEWER CONSTRUCTION

1. ALL SANITARY SEWER FACILITIES SHALL BE CONSTRUCTED IN ACCORDANCE WITH THE DESIGN, CONSTRUCTION REQUIREMENTS AND DETAIL DRAWINGS FOR WASTEWATER FACILITIES, AS PREPARED BY AQUA PENNSYLVANIA.
2. THE LOCATION OF EXISTING UTILITIES SHOWN ARE APPROXIMATE. ANY UTILITIES NOT SHOWN, OR NOT LOCATED AS SHOWN, SHALL NOT BE THE CAUSE OF THE CONTRACTOR TO DENY RESPONSIBILITY FOR PROTECTION AND/OR REPAIR DURING CONSTRUCTION. EXACT LOCATION SHALL BE VERIFIED IN THE FIELD BY THE CONTRACTOR.
3. ALL GRAVITY SANITARY SEWERS SHALL BE SDR 26 PVC PIPE UNLESS OTHERWISE LABELED OR NOTED ON THE PLANS.
4. SANITARY SEWER PIPE LENGTHS SHOWN ARE MEASURED FROM CENTER OF MANHOLE TO CENTER OF MANHOLE.
5. SANITARY AND STORM SEWER LINES SHALL HAVE A MINIMUM OF EIGHTEEN (18) INCH VERTICAL SEPARATION FROM THE WATER LINE UNLESS OTHERWISE APPROVED BY PENNSYLVANIA-AMERICAN WATER COMPANY.

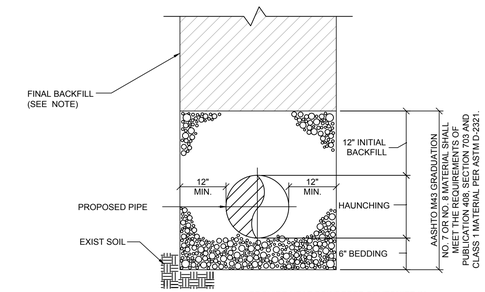

PROVIDE NEAT POWDERED BENTONITE IN THE PIPE BEDDING STONE (BEDDING STONE CHOKED WITH BENTONITE) AT ALL PIPE TO MANHOLE GASKET CONNECTIONS.

NOTE:
COMPACTED 2A STONE BACKFILL FOR PIPES INSTALLED IN PAVED AREAS OR FIELD VERIFIED MONITORING AND COMPACTION CERTIFICATION WILL NEED TO BE PROVIDED BY THE DEVELOPER'S GEOTECHNICAL ENGINEER.

TYPICAL EXCAVATION, BACKFILL & PIPE EMBEDMENT DETAIL S-4

SCALE: NONE

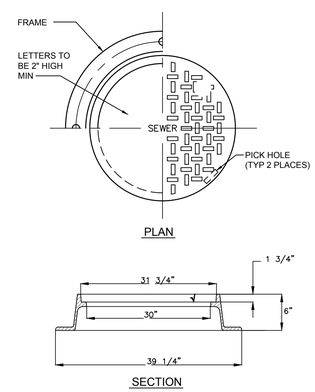

NEENAH R-1743 CAST IRON MANHOLE FRAME & COVER

SCALE: NONE S-14

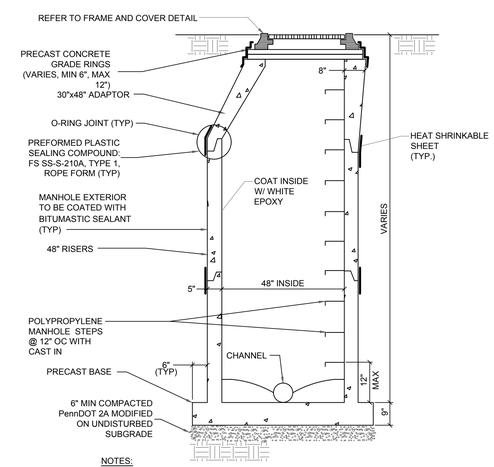

NOTES:

1. ALL PIPE TO MANHOLE CONNECTIONS SHALL BE MADE WITH A CAST-IN-PLACE GASKET. (TYP) (A-LOK OR APPROVED EQUAL)
2. MANHOLES EXCEEDING A DEPTH OF 16 FEET SHALL PROVIDE SAFETY PLATFORM BY HALO SAFETY SYSTEMS, LLC. (WWW.HALOSAFETY.COM)

TYPICAL MANHOLE DETAIL S-13

SCALE: NONE

© COPYRIGHT BURSICH ASSOCIATES, INC., 2018
THIS DOCUMENT, AND THE IDEAS AND DESIGNS INCORPORATED HEREIN, AS AN INSTRUMENT OF SERVICE, SHALL REMAIN THE PROPERTY OF BURSICH ASSOCIATES, INC. AND THEREFORE SHALL RETAIN ALL COMMON LAW, STATUTORY AND OTHER RESERVED RIGHTS, INCLUDING THE COPYRIGHT. THE DOCUMENT MAY NOT BE ASSIGNED TO THE OWNER OR OTHERS WITHOUT THE EXPRESS WRITTEN CONSENT OF BURSICH ASSOCIATES, INC. IS STRICTLY PROHIBITED. ANY USE, REUSE OR MODIFICATION WITHOUT WRITTEN CONSENT BY BURSICH ASSOCIATES, INC. SHALL BE AT THE USER'S SOLE RISK. THE USER AND BURSICH ASSOCIATES, INC. WHICH SHALL INDEMNIFY AND SAVE HARMLESS BURSICH ASSOCIATES, INC. FOR ALL CLAIMS, DAMAGES, LOSSES AND EXPENSES ARISING FROM THE USE THEREFROM.

NO.	REVISION	DATE	BY
2	REVISED PER TOWNSHIP REVIEW LETTER DATED 12/11/18	1/30/19	BG
1	REVISED PER TOWNSHIP REVIEW LETTERS DATED 9/13/18 & 10/26/18	11/5/18	BG

SEAL | NORTH

MANAGER NF	
DESIGN KK	CHKD. BY
DRAFT BG	CHKD. BY
FILE ROU-01	DATE 8/9/2018
NOTES	SCALE AS NOTED

BURSICH Sharing your Vision

Corporate Headquarters
2129 East High Street
Pottstown, PA 19464
610-323-4040

Southampton Office
706 Lakeside Drive
Southampton, PA 18966

www.bursich.com

CLIENT
ROUSE/CHAMBERLIN, LTD
500 EXTON COMMONS
EXTON, PA 19341

SUBJECT
CONSTRUCTION DETAILS
PRESERVE AT WILLISTOWN
WILLISTOWN TOWNSHIP, CHESTER COUNTY, PENNSYLVANIA

JOB NO. 187872
SHEET NO. 24 OF 26
DWG. NO. CD487872

P:\ROU-01\187872-00\dwg\LD_Plan\CD187872.dwg

PEMCO Est. 1882 LIGHTING PRODUCTS
A QSSI COMPANY

HISTORIC Carlsbad

CAR Series

LED

RADIANT™ & CREE LED POST TOPS

EPA: 2.7
WEIGHT: 40 lbs (max.)

The Carlsbad Medium Radiant™ LED luminaire offers historic styling with light control for maximum efficiency, uniformity and low glare. Designed to look like the lighting of yesteryear, these luminaires are the lighting of choice in advanced LED performance.

The NEW PEMCO Radiant™ light engine is available in multiple CCT, lumen output and optical choices.

Specifications and Features:

Radiant™ LED
- Conformal Coating LED light engine
- CCT 3000, 4000, 5000
- IP66

Optical
- Types II, III, IV, V

Electrical
- Electronic Driver, 120-277V, 50/60Hz or 347/480V, 50/60Hz
- Dimmable Driver
- Surge Protection INCLUDED
  - surge protection device meets IEEE C62.41 2002 C High 10kA

Controls
- Button eye photo control (PC)

Housing
- Cast aluminum cage, roof and fitter*

Finish
- Super durable polyester powder coat finish over a chromate conversion coating. Custom finishes available, including patinas and all RAL colors.

Listings & Ratings
- ETL listed to UL 1598 standard for wet location and IP66

Warranty
- 5 year limited warranty

ORDERING FORMAT **Example:** CARL2-FA-45W4K-U-5-J-___-SF3-BK
Blank if pole is top

Model	Globe/Lens		LED Module	Voltage	Distribution
CARL2=Carlsbad Medium Radiant™ **CARL3**=Carlsbad Small Radiant™ Taller CAR1 also available 34"	**CA**=Clear Acrylic **WA**=White (Opal) Acrylic **PA**=Double Pattern Acrylic **FA**=Frosted Acrylic **DA**=Seeded Acrylic	**FB**=Etched Polycarbonate **CP**=Clear Polycarbonate **TG**=Clear Tempered Glass **FG**=Frosted Tempered Glass	**See Chart - LED Light Engine Specifications.**	U=120-277V H=347/480V	1=Type I 2=Type II 3=Type III 4=Type IV 5=Type V

Finial	Mounting	Options	Finish		
B=GF2, **C**=GF3, **D**=GF4, **F**=GF6, **G**=GF7, **H**=GF8, **I**=GF9, **J**=GF10, **K**=GF12 **O**=GF17, **P**=GF18, **V**=GF24	Leave blank for Pole Top **WM**=Wall Mount Select Arm **PM**=Pendant Mount (specify chain or stem) Select Arm	**FS**=Fuse, Single **FD**=Fuse, Double **PC**=Button eye photo control **H**= House Side Shield	Standard Colors **BK**=Black **BZ**=Bronze **DBZ**=Dark Bronze **WH**=White	Standard Colors **GR**=Green **SM**=Silver Metallic **GY**=Light Grey **TBK**=Textured Black	**CC**=Custom (Consult Factory)

Specifications subject to change without notice. Rev. 07/618

Aluminum
DECORATIVE POLES AND BASES

PLB 102-4" DECORATIVE ALUMINUM POLE
4-BOLT ANCHOR BASE & COVER

PEMCO Est. 1882 LIGHTING PRODUCTS A QSSI COMPANY

PLB 102-4

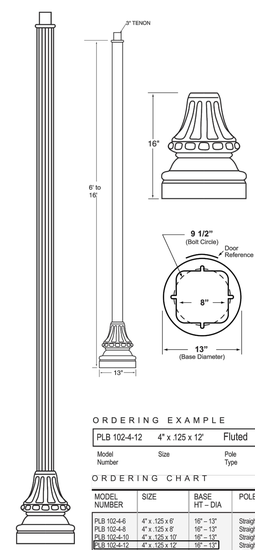

- 4" – 6' to 16' standard heights
- Straight or tapered, smooth or fluted poles
- For single or multiple luminaire mounting

SPECIFICATIONS
All aluminum alloys comply with metallurgical and mechanical properties set forth in the Aluminum Association Standards.

SHAFT
The shaft is extruded from all new 6061 aluminum alloy tubing, and has a fluted or smooth straight upper section on a cast decorative base.

ANCHOR BASE
Each standard includes an A356 alloy cast aluminum four bolt base. The shaft is inserted and joined by a continuous circumferential weld at the outside top and inside bottom of the anchor base. A grounding lug is welded opposite the handhole.

ACCESS DOOR
An extra large access cover is included. A grounding lug is also provided.

ANCHOR BOLTS
Each standard includes four 3/4–10 x 25" steel hot dip galvanized anchor bolts each with two nuts, two flat washers and one lock washer.

FINISH
Standard colors are: black, medium bronze, dark bronze, white, green, or silver metallic. Premium colors are: Verde Patina, Pewter Patina, Silver Sparkle or custom colors. All RAL colors are available to match poles or fixtures. Contact PEMCO for details.

OPTIONS
Smooth tapered shaft 4" to 3".

ORDERING EXAMPLE

PLB 102-4-12	4" x .125 x 12'	Fluted	4"	BK
Model Number	Size	Pole Type	Shaft Diameter	Finish

This example illustrates the standard ordering sequence. Select each part of the ordering number from the Ordering Chart below.

ORDERING CHART

MODEL NUMBER	SIZE	BASE HT – DIA	POLE TYPE	SHAFT DIAMETER	FINISH
PLB 102-4-6	4" x .125 x 6'	16" – 13"	Straight, Smooth or Fluted, Extruded	4"	Standard colors are: BK=Black BZ=Medium Bronze DBZ=Dark Bronze WH=White GR=Green SM=Silver Metallic Premium colors are: VP=Verde Patina PP=Pewter Patina SS=Silver Sparkle CC=Custom color
PLB 102-4-8	4" x .125 x 8'	16" – 13"	Straight, Smooth or Fluted, Extruded	4"	
PLB 102-4-10	4" x .125 x 10'	16" – 13"	Straight, Smooth or Fluted, Extruded	4"	
PLB 102-4-12	4" x .125 x 12'	16" – 13"	Straight, Smooth or Fluted, Extruded	4"	
PLB 102-4-14	4" x .125 x 14'	16" – 13"	Straight, Smooth or Fluted, Extruded	4"	
PLB 102-4-16	4" x .250 x 16'	16" – 13"	Straight, Smooth or Fluted, Extruded	4"	

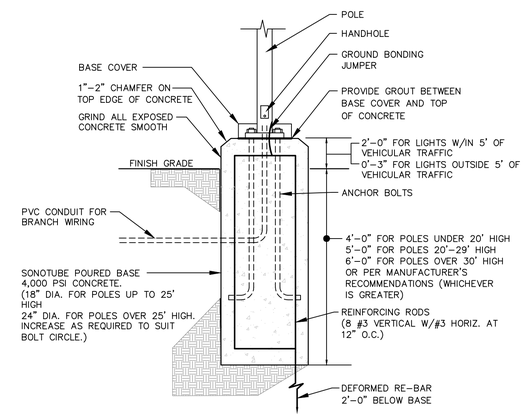

LIGHT POLE BASE
NO SCALE

© COPYRIGHT BURSICH ASSOCIATES, INC., 2018
THE PLANS, SPECIFICATIONS, REPORTS, DRAWINGS, NOTES AND OTHER DOCUMENTS AND INSTRUMENTS PREPARED BY BURSICH ASSOCIATES, INC. AS INSTRUMENTS OF SERVICE SHALL REMAIN THE PROPERTY OF BURSICH ASSOCIATES, INC. AND THEREFORE SHALL RETAIN ALL COMMON LAW, STATUTORY AND OTHER RESERVED RIGHTS, INCLUDING THE COPYRIGHT THERETO. THE REPRODUCTION, ALTERATION OR REPUBLICATION IN WHOLE OR IN PART WITHOUT THE EXPRESS WRITTEN CONSENT OF BURSICH ASSOCIATES, INC. IS STRICTLY PROHIBITED. ANY USE, REUSE OR MODIFICATION BY ANYONE OTHER THAN THE SPECIFIED RECIPIENT IS PROHIBITED. BY ACCEPTANCE OF THESE DOCUMENTS, THE USER AND BURSICH ASSOCIATES, INC. WHICH SHALL INDEMNIFY AND SAVE HARMLESS BURSICH ASSOCIATES, INC. FOR ALL CLAIMS, DAMAGES, LOSSES AND EXPENSES ARISING FROM THE USE THEREFROM.

NO.	REVISION	DATE	BY
2	REVISED PER TOWNSHIP REVIEW LETTER DATED 12/11/18	1/30/19	BG
1	REVISED PER TOWNSHIP REVIEW LETTERS DATED 9/13/18 & 10/26/18	11/5/18	BG

SEAL

NORTH

MANAGER NF	
DESIGN KK	CHKD. BY
DRAFT BG	CHKD. BY
FILE ROU–01	DATE 8/9/2018
NOTES	SCALE AS NOTED

BURSICH
Sharing your Vision

Corporate Headquarters
2129 East High Street
Pottstown, PA 19464
610–323–4040

Southampton Office
706 Lakeside Drive
Southampton, PA 18966

www.bursich.com

CLIENT
ROUSE/CHAMBERLIN, LTD
500 EXTON COMMONS
EXTON, PA 19341

SUBJECT
CONSTRUCTION DETAILS
PRESERVE AT WILLISTOWN
WILLISTOWN TOWNSHIP, CHESTER COUNTY, PENNSYLVANIA

JOB NO. 187872
SHEET NO. 25 OF 26
DWG. NO. CD587872

P:\ROU–01\187872–00\dwg\LD_Plan\CD187872.dwg

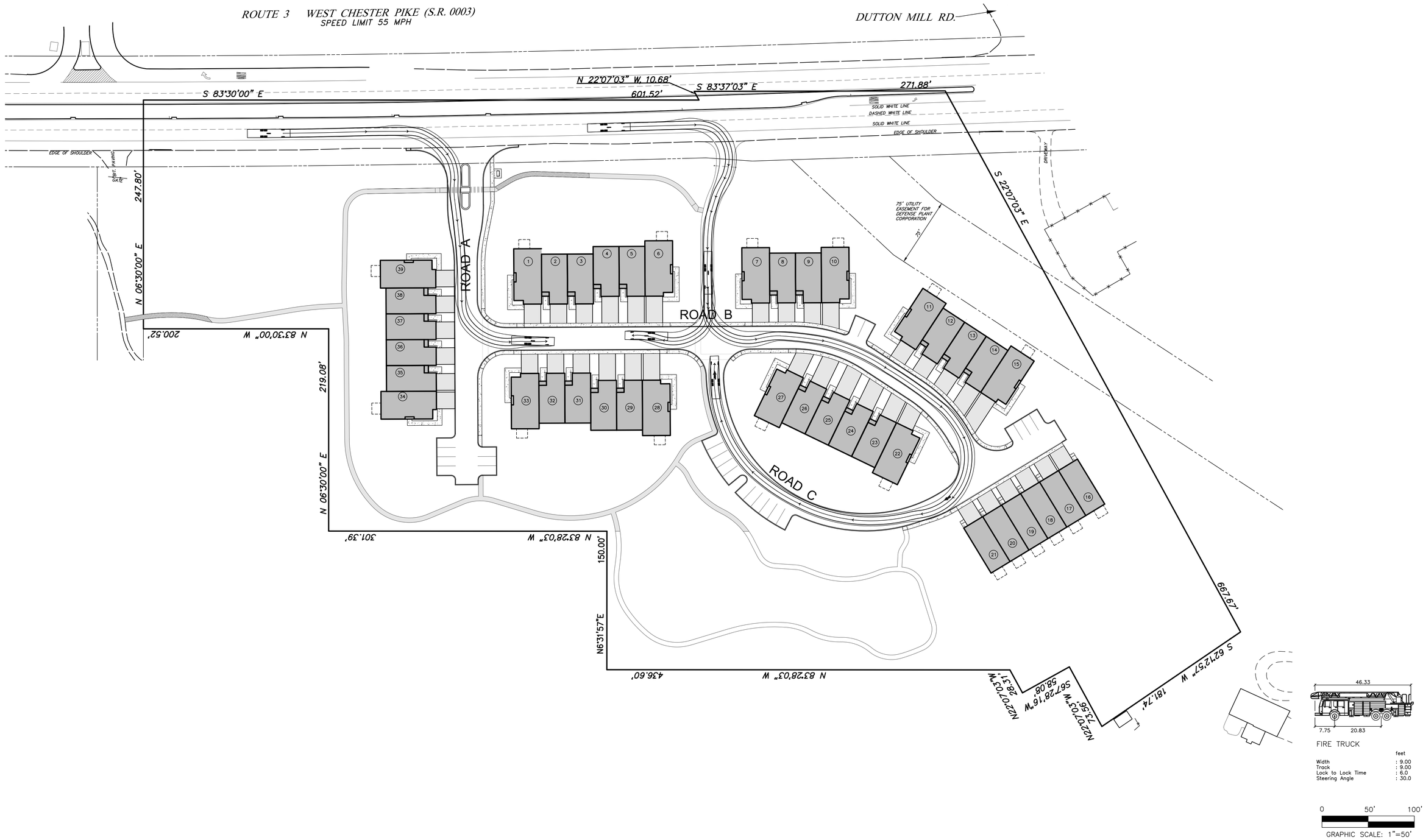

© COPYRIGHT BURSICH ASSOCIATES, INC. 2018
THE PLANS, SPECIFICATIONS, REPORTS, PROGRAMS, PLAN, WATER AND OTHER DOCUMENTS AND INSTRUMENTS PREPARED BY BURSICH ASSOCIATES, INC. AS INSTRUMENTS OF SERVICE SHALL REMAIN THE PROPERTY OF BURSICH ASSOCIATES, INC. AND THEREFORE SHALL RETAIN ALL COMMON LAW, STATUTORY AND OTHER RESERVED RIGHTS, INCLUDING THE COPYRIGHT THEREIN. THE PLANS, SPECIFICATIONS, REPORTS, PROGRAMS, PLAN, WATER AND OTHER DOCUMENTS WITHOUT THE EXPRESS WRITTEN CONSENT OF BURSICH ASSOCIATES, INC. IS STRICTLY PROHIBITED. ANY USE, REUSE OR MODIFICATION OF THE PLANS, SPECIFICATIONS, REPORTS, PROGRAMS, PLAN, WATER AND OTHER DOCUMENTS BY THE USER AND BURSICH ASSOCIATES, INC. WHICH SHALL INDEMNIFY AND SAVE HARMLESS BURSICH ASSOCIATES, INC. FOR ALL CLAIMS, DAMAGES, LOSSES AND EXPENSES ARISING FROM THE USE THEREFROM.

NO.	REVISION	DATE	BY
2	REVISED PER TOWNSHIP REVIEW LETTER DATED 12/11/18	1/30/19	BG
1	REVISED PER TOWNSHIP REVIEW LETTERS DATED 9/13/18 & 10/26/18	11/5/18	BG

SEAL

NORTH

MANAGER NF	
DESIGN KK	CHKD. BY
DRAFT BG	CHKD. BY
FILE ROU-01	DATE 8/9/2018
NOTES	SCALE 1"=50'

BURSICH
Sharing your Vision

Corporate Headquarters
2129 East High Street
Pottstown, PA 19464
610-323-4040

Southampton Office
706 Lakeside Drive
Southampton, PA 18966

www.bursich.com

CLIENT
ROUSE/CHAMBERLIN, LTD
500 EXTON COMMONS
EXTON, PA 19341

SUBJECT
EMERGENCY VEHICLE CIRCULATION PLAN

PRESERVE AT WILLISTOWN

WILLISTOWN TOWNSHIP, CHESTER COUNTY, PENNSYLVANIA

JOB NO. 187872

SHEET NO. 26 OF 26

DWG. NO. TC187872

P:\ROU-01\187872-00\dwg\LD_Plan\TC187872.dwg

WEST CHESTER PIKE (S.R. 0003)

ROCK CONSTRUCTION ENTRANCE (TYP.)

#3–24" SILT SOCK

#4–24" SILT SOCK

LIMITS OF DISTURBANCE (TYP.)

LIMITS OF NPDES (TYP.)

#5–24" SILT SOCK

LIMITS OF DISTURBANCE (TYP.)

TREE PROTECTION FENCING

#2–24" SILT SOCK

#1–24" SILT SOCK

ALL EXISTING STRUCUTRES, DRIVEWAYS, SHEDS, GARAGES, ETC. SHALL BE DEMOLISHED. SEE DEMOLITION PLAN (TYP.)

TREE PROTECTION FENCING

LIMITS OF NPDES (TYP.)

TREE PROTECTION FENCING (SEE SHEET 18 FOR TREE PROTECTION DETAIL)

LIMITS OF DISTURBANCE (TYP.)

TREE PROTECTION FENCING

LIMITS OF DISTURBANCE (TYP.)

TREE PROTECTION FENCING

LIMITS OF NPDES (TYP.)

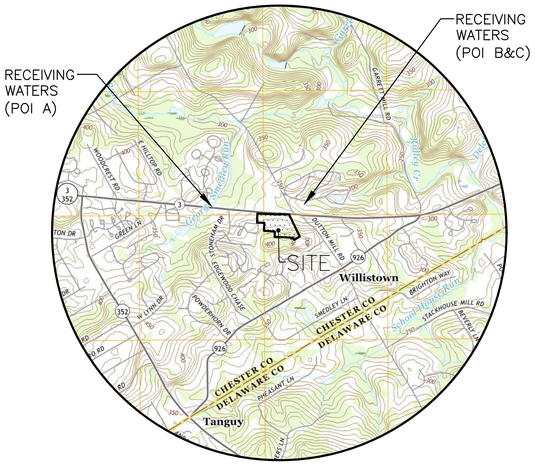

LOCATION MAP

SCALE: 1"=2000'

EXISTING FEATURES LEGEND

- SITE BENCHMARK
- PROPERTY LINE
- ADJOINER LINE
- LEGAL RIGHT OF WAY
- EASEMENT LINE
- CONCRETE CURB
- EDGE OF PAVE
- EDGE OF DRIVE
- CONTOURS (372, 370)
- SPOT ELEVATION (×200.0)
- WOOD LINE
- TREES
- SANITARY SEWER MAIN (S)
- SANITARY SEWER CLEANOUT
- SANITARY SEWER MANHOLE (S)
- STORM SEWER
- M&C TYPE INLETS
- WATER MAIN (W)
- FIRE HYDRANT
- WATER VALVE
- WATER MANHOLE (W)
- GAS MAIN (G)
- GAS VALVE
- OVERHEAD WIRES (OHW)
- UNDERGROUND WIRES (UGW)
- UTILITY POLE
- 15–25% SLOPES
- SOILS (GdD)
- SLANTED TEXT DENOTES EXISTING FEATURE

CRITICAL STAGES

1. INFILTRATION BASIN A
2. UNDERGROUND INFILTRATION TRENCH A
3. BIO–RETENTION BASIN B
4. SOIL AMENDMENT AREAS
5. PERVIOUS PAVEMENT

0 50' 100'

GRAPHIC SCALE: 1"=50'

SOILS

MAP UNIT SYMBOL	MAP UNIT NAME
GdB	GLADSTONE GRAVELLY LOAM, 3–8% SLOPES
GdD	GLADSTONE GRAVELLY LOAM, 15–25% SLOPES
UugB	URBAN LAND–UDORTHENTS, SCHIST AND GNEISS COMPLEX, 0–8% SLOPES
UugD	URBAN LAND–UDORTHENTS, SCHIST AND GNEISS COMPLEX, 8–25% SLOPES

PROPOSED LEGEND

- BUILDING
- ROAD CENTERLINE
- DEPRESSED CURB
- EDGE OF PAVING
- CURB
- SEWER MAIN (S)
- SEWER SERVICE LATERAL (L)
- SANITARY SEWER MANHOLE
- SANITARY SEWER CLEANOUT
- SANITARY SEWER STRUCTURE IDENTIFIER
- STORMWATER PIPE
- C&M TYPE STORMWATER INLET
- HEADWALL/ENDWALL
- RIP–RAP APRON
- STORMWATER MANHOLE (D)
- STORMWATER STRUCTURE IDENTIFIER (A21)
- WATER MAIN (W)
- WATER SERVICE LATERAL (WS)
- WATER GATE VALVE
- WATER SERVICE SHUTOFF
- FIRE HYDRANT
- SPOT ELEVATION
- INTERMEDIATE CONTOUR (362)
- INDEX CONTOUR (360)
- DIRECTION OF FLOW
- WOODS LINE
- UNIT NUMBER (15)
- FENCE
- TREE PROTECTION FENCING
- ADA DETECTABLE WARNING STRIP
- TOPSOIL STOCK PILE
- SILT SOCK
- DIVERSION SOCK
- CHANNEL LINING
- TRIBUTARY AREA TO SED. BASIN
- TEMPORARY GRADING
- CONSTRUCTION ENTRANCE
- CONCRETE WASHOUT
- INLET PROTECTION
- SPILLWAY MATTING
- EROSION CONTROL MATTING
- LIMIT OF DISTURBANCE
- LIMIT OF NPDES
- CLEAN OUT STAKE
- SOIL AMENDMENT

© COPYRIGHT BURSICH ASSOCIATES, INC., 2018
THE PLANS, SPECIFICATIONS, REPORTS, DESIGNS, DRAWINGS, MAPS AND OTHER DOCUMENTS AND INSTRUMENTS PREPARED BY BURSICH ASSOCIATES, INC. AS INSTRUMENTS OF SERVICE SHALL REMAIN THE PROPERTY OF BURSICH ASSOCIATES, INC. AND THEREFORE SHALL RETAIN ALL COMMON LAW, STATUTORY AND OTHER RESERVED RIGHTS, INCLUDING THE COPYRIGHT THERETO. THE REPRODUCTION, ALTERATION OR REPUBLICATION WITHOUT THE EXPRESS WRITTEN CONSENT OF BURSICH ASSOCIATES, INC. IS STRICTLY PROHIBITED. ANY USE, REUSE OR MODIFICATION WITHOUT WRITTEN CONSENT OF BURSICH ASSOCIATES, INC. WILL BE DEEMED A MATERIAL BREACH BY THE USER AND BURSICH ASSOCIATES, INC. WHICH SHALL INDEMNIFY AND SAVE HARMLESS BURSICH ASSOCIATES, INC. FOR ALL CLAIMS, DAMAGES, LOSSES AND EXPENSES ARISING FROM THE USE THEREFROM.

NO.	REVISION	DATE	BY
2	REVISED PER TOWNSHIP REVIEW LETTER DATED 12/11/18	1/30/19	BG
1	REVISED PER TOWNSHIP REVIEW LETTERS DATED 9/13/18 & 10/26/18	11/5/18	BG

SEAL

NORTH

MANAGER NF	
DESIGN KK	CHKD. BY
DRAFT BG	CHKD. BY
FILE ROU–01	DATE 8/9/2018
NOTES	SCALE 1"=50'

BURSICH
Sharing your Vision

Corporate Headquarters
2129 East High Street
Pottstown, PA 19464
610–323–4040

Southampton Office
706 Lakeside Drive
Southampton, PA 18966

www.bursich.com

CLIENT

ROUSE/CHAMBERLIN, LTD
500 EXTON COMMONS
EXTON, PA 19341

SUBJECT

EROSION & SEDIMENT CONTROL PLAN

PRESERVE AT WILLISTOWN

WILLISTOWN TOWNSHIP, CHESTER COUNTY, PENNSYLVANIA

JOB NO. 187872

SHEET NO. 1 OF 6

DWG. NO. ES187872

P:\ROU–01\187872–00\dwg\LD_Plan\ES187872.dwg

WEST CHESTER PIKE (S.R. 0003)

ROCK CONSTRUCTION ENTRANCE (TYP.)

SILT SOCKS SHALL BE INSTALLED PARALLEL TO EXISTING CONTOURS AND SHALL POINT UPSLOPE A MINIMUM OF THEIR HEIGHT TO ENSURE END AROUND FLOWS DO NOT OCCUR (TYP.)

EROSION CONTROL MATTING ON ALL 3:1 SLOPES (TYP.)

LIMITS OF DISTURBANCE (TYP.)

#3-24" SILT SOCK

INLET PROTECTION (TYP.)

#4-24" SILT SOCK

TEMP PIPE INV. UP 358.0 INV. DN 354.0 112-24" CMP/HDPE

SOIL AMENDMENT (TYP.) CREATE SUMPED AREA TO COLLECT STORMWATER

TEMP DIVERSION SOCK 5

LIMITS OF NPDES (TYP.)

#5-24" SILT SOCK

LIMITS OF DISTURBANCE (TYP.)

TREE PROTECTION FENCING

#2-24" SILT SOCK

#1-24" SILT SOCK

SEDIMENT BASIN A BOTT. ELEV. 349.00 BERM ELEV. 356.00 C/O ELEV. 350.00 RISER: ELEV. 353.00 NAC PX069 64" S/W ● ELEV. 354.50

SKIMMER

INFILTRATION BASIN A

CLEANOUT STAKE

PLANTING SOIL (TYP.)

UNDERDRAIN (TYP.)

UNDERDRAIN CLEANOUT (TYP.)

UNDERGROUND TRENCH A

FOREBAY A

WATERBAR (PROVIDE COVER OVER TEMP PIPE)

ROAD A

CONCRETE WASHOUT

ROAD B

ROOF DRAIN 6" @ 1% MIN (TYP.)

ROOF DRAIN CLEANOUT (TYP.)

BIO-RETENTION BASIN B

ROOF DRAIN 8" @ 1% MIN (TYP.)

ROOF DRAIN CLEANOUT (TYP.)

SOIL AMENDMENT (TYP.)

TREE PROTECTION FENCING

PERMANENT SWALE 1

LIMITS OF NPDES (TYP.)

SOIL AMENDMENT (TYP.)

PERMANENT SWALE 5

PERMANENT SWALE 2

SOIL AMENDMENT (TYP.)

ROAD C

SWALE 5 WSHED

PERMANENT SWALE 4

SWALE 1 WSHED

TREE PROTECTION FENCING (SEE SHEET 18 FOR TREE PROTECTION DETAIL)

LIMITS OF DISTURBANCE (TYP.)

DURING CONSTRUCTION ALL STORM SEWERS WITHOUT A MINIMUM OF 1 FOOT OF COVER SHALL TEMPORARILY PLACE FILL TO PROVIDE NECESSARY COVER (TYP.)

SEDIMENT BASIN A1 WSHED

SWALE 2 WSHED

LIMITS OF DISTURBANCE (TYP.)

INLET TOP UNITS SHALL BE RAISED UP TO ENSURE SEDIMENT LADEN WATER IS ROUTED TO SEDIMENT BASIN/TRAP UNTIL BINDER COURSE IS PAVED (TYP.)

TREE PROTECTION FENCING

PERMANENT SWALE 3

TREE PROTECTION FENCING

EROSION CONTROL MATTING ON ALL 3:1 SLOPES (TYP.)

SWALE 4 WSHED

SWALE 3 WSHED

LIMITS OF NPDES (TYP.)

SEDIMENT BASIN A1 WSHED

GdB GdD UugB UugD

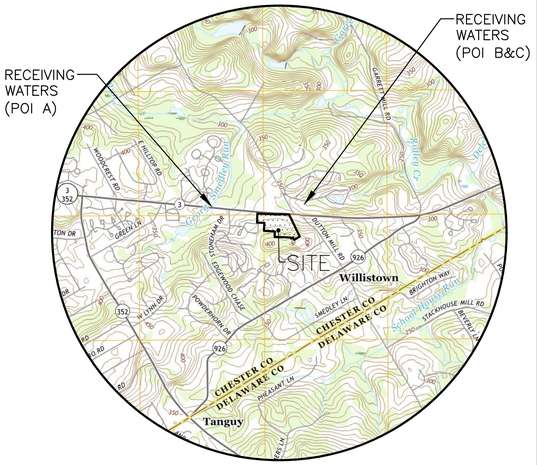

LOCATION MAP
SCALE: 1"=2000'

EXISTING FEATURES LEGEND

SITE BENCHMARK
PROPERTY LINE
ADJOINER LINE
LEGAL RIGHT OF WAY
EASEMENT LINE
CONCRETE CURB
EDGE OF PAVE
EDGE OF DRIVE
CONTOURS (372, 370)
SPOT ELEVATION (200.0)
WOOD LINE
TREES
SANITARY SEWER MAIN (S)
SANITARY SEWER CLEANOUT
SANITARY SEWER MANHOLE
STORM SEWER
M&C TYPE INLETS
WATER MAIN (W)
FIRE HYDRANT
WATER VALVE
WATER MANHOLE
GAS MAIN (G)
GAS VALVE
OVERHEAD WIRES (OHW)
UNDERGROUND WIRES (UGW)
UTILITY POLE
15-25% SLOPES
SOILS (GdD)
SLANTED TEXT DENOTES EXISTING FEATURE

CRITICAL STAGES

1. INFILTRATION BASIN A
2. UNDERGROUND INFILTRATION TRENCH A
3. BIO-RETENTION BASIN B
4. SOIL AMENDMENT AREAS
5. PERVIOUS PAVEMENT

GRAPHIC SCALE: 1"=50' (0, 50', 100')

SOILS

MAP UNIT SYMBOL	MAP UNIT NAME
GdB	GLADSTONE GRAVELLY LOAM, 3-8% SLOPES
GdD	GLADSTONE GRAVELLY LOAM, 15-25% SLOPES
UugB	URBAN LAND-UDORTHENTS, SCHIST AND GNEISS COMPLEX, 0-8% SLOPES
UugD	URBAN LAND-UDORTHENTS, SCHIST AND GNEISS COMPLEX, 8-25% SLOPES

PROPOSED LEGEND

BUILDING
ROAD CENTERLINE
DEPRESSED CURB
EDGE OF PAVING
CURB
SEWER MAIN (S)
SEWER SERVICE LATERAL (L)
SANITARY SEWER MANHOLE
SANITARY SEWER CLEANOUT
SANITARY SEWER STRUCTURE IDENTIFIER
STORMWATER PIPE
C&M TYPE STORMWATER INLET
HEADWALL/ENDWALL
RIP-RAP APRON
STORMWATER MANHOLE (D)
STORMWATER STRUCTURE IDENTIFIER (A21)
WATER MAIN (W)
WATER SERVICE LATERAL (WS)
WATER GATE VALVE
WATER SERVICE SHUTOFF
FIRE HYDRANT
SPOT ELEVATION
INTERMEDIATE CONTOUR (362)
INDEX CONTOUR (360)
DIRECTION OF FLOW
WOODS LINE
UNIT NUMBER (15)
FENCE
TREE PROTECTION FENCING
ADA DETECTABLE WARNING STRIP
VERTICAL TEXT DENOTES PROPOSED FEATURE
TOPSOIL STOCK PILE
SILT SOCK
DIVERSION SOCK
CHANNEL LINING
TRIBUTARY AREA TO SED. BASIN
TEMPORARY GRADING
CONSTRUCTION ENTRANCE
CONCRETE WASHOUT
INLET PROTECTION
SPILLWAY MATTING
EROSION CONTROL MATTING
LIMIT OF DISTURBANCE
LIMIT OF NPDES
CLEAN OUT STAKE
SOIL AMENDMENT

© COPYRIGHT BURSICH ASSOCIATES, INC. 2018
THE PLANS, SPECIFICATIONS, REPORTS, DRAWINGS, DATA NOTES AND OTHER DOCUMENTS AND INSTRUMENTS PREPARED BY BURSICH ASSOCIATES, INC. AS INSTRUMENTS OF SERVICE SHALL REMAIN THE PROPERTY OF BURSICH ASSOCIATES, INC. AND THEREFORE SHALL RETAIN ALL COMMON LAW, STATUTORY AND OTHER RESERVED RIGHTS, INCLUDING THE COPYRIGHT THERETO. THE PLANS, SPECIFICATIONS, REPORTS, DRAWINGS AND SPECIFICATIONS WITHOUT THE EXPRESS WRITTEN CONSENT OF BURSICH ASSOCIATES, INC. IS STRICTLY PROHIBITED. ANY USE, REUSE OR OWNERSHIP BY ANYONE OTHER THAN THE INTENDED OWNER WITH RESPECT TO THE PROJECT AND SITE IS PROHIBITED. THE USER AND BURSICH ASSOCIATES, INC. WHICH SHALL INDEMNIFY AND SAVE HARMLESS BURSICH ASSOCIATES, INC. FOR ALL CLAIMS, DAMAGES, LOSSES AND EXPENSES ARISING FROM THE USE THEREFROM.

NO.	REVISION	DATE	BY
2	REVISED PER TOWNSHIP REVIEW LETTER DATED 12/11/18	1/30/19	BG
1	REVISED PER TOWNSHIP REVIEW LETTERS DATED 9/13/18 & 10/26/18	11/5/18	BG

SEAL

NORTH

MANAGER NF	
DESIGN KK	CHKD. BY
DRAFT BG	CHKD. BY
FILE ROU-01	DATE 8/9/2018
NOTES	SCALE 1"=50'

BURSICH Sharing your Vision

Corporate Headquarters
2129 East High Street
Pottstown, PA 19464
610-323-4040

Southampton Office
706 Lokeside Drive
Southampton, PA 18966

www.bursich.com

CLIENT
ROUSE/CHAMBERLIN, LTD
500 EXTON COMMONS
EXTON, PA 19341

SUBJECT
EROSION & SEDIMENT CONTROL PLAN
PRESERVE AT WILLISTOWN
WILLISTOWN TOWNSHIP, CHESTER COUNTY, PENNSYLVANIA

JOB NO. 187872
SHEET NO. 2 OF 6
DWG. NO. ES287872

P:\ROU-01\187872-00\dwg\LD_Plan\ES187872.dwg

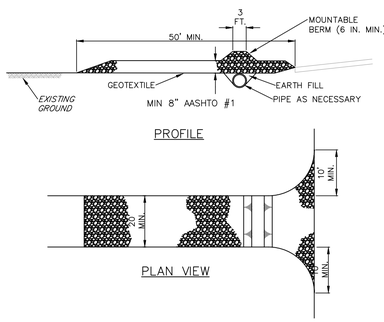

* MOUNTABLE BERM USED TO PROVIDE PROPER COVER FOR PIPE

NOTES:

REMOVE TOPSOIL PRIOR TO INSTALLATION OF ROCK CONSTRUCTION ENTRANCE. EXTEND ROCK OVER FULL WIDTH OF ENTRANCE.

RUNOFF SHALL BE DIVERTED FROM ROADWAY TO A SUITABLE SEDIMENT REMOVAL BMP PRIOR TO ENTERING ROCK CONSTRUCTION ENTRANCE.

MOUNTABLE BERM SHALL BE INSTALLED WHEREVER OPTIONAL CULVERT PIPE IS USED AND PROPER PIPE COVER AS SPECIFIED BY MANUFACTURER IS NOT OTHERWISE PROVIDED. PIPE SHALL BE SIZED APPROPRIATELY FOR SIZE OF DITCH BEING CROSSED.

MAINTENANCE: ROCK CONSTRUCTION ENTRANCE THICKNESS SHALL BE CONSTANTLY MAINTAINED TO THE SPECIFIED DIMENSIONS BY ADDING ROCK. A STOCKPILE SHALL BE MAINTAINED ON SITE FOR THIS PURPOSE. ALL SEDIMENT DEPOSITED ON PAVED ROADWAYS SHALL BE REMOVED AND RETURNED TO THE CONSTRUCTION SITE IMMEDIATELY. IF EXCESSIVE AMOUNTS OF SEDIMENT ARE BEING DEPOSITED ON ROADWAY, EXTEND LENGTH OF ROCK CONSTRUCTION ENTRANCE BY 50 FOOT INCREMENTS UNTIL CONDITION IS ALLEVIATED OR INSTALL WASH RACK. WASHING THE ROADWAY OR SWEEPING THE DEPOSITS INTO ROADWAY DITCHES, SEWERS, CULVERTS, OR OTHER DRAINAGE COURSES IS NOT ACCEPTABLE.

STANDARD CONSTRUCTION DETAIL #3-1
ROCK CONSTRUCTION ENTRANCE

NOT TO SCALE

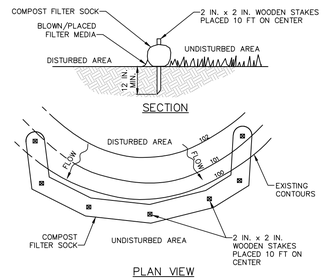

NOTES:

SOCK FABRIC SHALL MEET STANDARDS OF TABLE 4.1 OF THE PA DEP EROSION CONTROL MANUAL. COMPOST SHALL MEET THE STANDARDS OF TABLE 4.2 OF THE PA DEP EROSION CONTROL MANUAL.

COMPOST FILTER SOCK SHALL BE PLACED AT EXISTING LEVEL GRADE. BOTH ENDS OF THE BARRIER SHALL BE EXTENDED AT LEAST 8 FEET UP SLOPE AT 45 DEGREES TO THE MAIN BARRIER ALIGNMENT. MAXIMUM SLOPE LENGTH ABOVE ANY BARRIER SHALL NOT EXCEED THAT SPECIFIED FOR THE SIZE OF THE SOCK AND THE SLOPE OF ITS TRIBUTARY AREA.

TRAFFIC SHALL NOT BE PERMITTED TO CROSS COMPOST FILTER SOCKS.

ACCUMULATED SEDIMENT SHALL BE REMOVED WHEN IT REACHES 1/2 THE ABOVE GROUND HEIGHT OF THE BARRIER AND DISPOSED IN THE MANNER DESCRIBED ELSEWHERE IN THE PLAN.

COMPOST FILTER SOCKS SHALL BE INSPECTED WEEKLY AND AFTER EACH RUNOFF EVENT. DAMAGED SOCKS SHALL BE REPAIRED ACCORDING TO MANUFACTURER'S SPECIFICATIONS OR REPLACED WITHIN 24 HOURS OF INSPECTION.

BIODEGRADABLE COMPOST FILTER SOCKS SHALL BE REPLACED AFTER 6 MONTHS; PHOTODEGRADABLE SOCKS AFTER 1 YEAR. POLYPROPYLENE SOCKS SHALL BE REPLACED ACCORDING TO MANUFACTURER'S RECOMMENDATIONS.

UPON STABILIZATION OF THE AREA TRIBUTARY TO THE SOCK, STAKES SHALL BE REMOVED. THE SOCK MAY BE LEFT IN PLACE AND VEGETATED OR REMOVED. IN THE LATTER CASE, THE MESH SHALL BE CUT OPEN AND THE MULCH SPREAD AS A SOIL SUPPLEMENT.

STANDARD CONSTRUCTION DETAIL #4-1
COMPOST FILTER SOCK

NOT TO SCALE

TABLE 4.1 – COMPOST SOCK FABRIC MINIMUM SPECIFICATIONS

MATERIAL TYPE	3 MIL HDPE	5 MIL HDPE	5 MIL HDPE	MULTI-FILAMENT POLYPROIPYLENE (MFPP)	HEAVY DUTY MULTI-FILAMENT POLYPROPYLENE (HDMFPP)
MATERIAL CHARACTERISTICS	PHOTO-DEGRADABLE	PHOTO-DEGRADABLE	BIO-DEGRADABLE	PHOTO-DEGRADABLE	PHOTO-DEGRADABLE
SOCK DIAMETERS	12" 18"	12" 18" 24" 32"	12" 18" 24" 32"	12" 18" 24" 32"	12" 18" 24" 32"
MESH OPENING	3/8"	3/8"	3/8"	3/8"	1/8"
TENSILE STRENGTH		26 PSI	26 PSI	44 PSI	202 PSI
ULTRAVIOLET STABILITY % ORIGINAL STRENGTH (ASTM G-155)	% AT 1000 HR	23% AT 1000 HR		100% AT 1000 HR	100% AT 1000 HR
MINIMUM FUNCTIONAL LONGEVTY	6 MONTHS	9 MONTHS	6 MONTHS	1 YEAR	2 YEARS
TWO-PLY SYSTEMS					
INNER CONTAINMENT NETTING		HDPE BIAXIAL NET CONTINUOUSLY WOUND FUSION-WELDED JUNCTURES 3/4" X 3/4" MAX. APERTURE SIZE			
OUTER FILTRATION MESH		COMPOSITE POLYPROPYLENE FABRIC (WOVEN LAYER & NON-WOVEN FLEECE MECHANICALLY FUSED VIA NEDDLE PUNCH) 3/16" MAX. APERTURE SIZE			
SOCK FABRICS COMPOSED OF BURLAP MAY BE USED ON PROJECTS LASTING 6 MONTHS OR LESS					

TABLE 4.2 – COMPOST STANDARDS

ORGANIC MATTER CONTENT	25% – 100% (DRY WEIGHT BASIS)
ORGANIC PORTION	FIBROUS AND ELONGATED
PH	5.5 – 8.5
MOISTURE CONTENT	30% – 60%
PARTICLE SIZE	30%-50% PASS THROUGH 3/8" SIEVE
SOLUBLE SALT CONCENTRATION	5.0dS/m (mmhos/cm) MAXIMUM

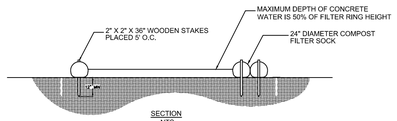

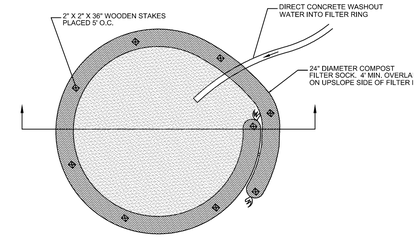

NOTES:
1. INSTALL ON FLAT GRADE FOR OPTIMUM PERFORMANCE
2. 18" DIAMETER FILTER SOCK MAY BE STACKED ONTO DOUBLE 24" DIAMETER SOCKS IN PYRAMIDAL CONFIGURATION FOR ADDED HEIGHT.
3. A SUITABLE IMPERVIOUS GEOMEMBRANE SHALL BE PLACED AT THE LOCATION OF THE WASHOUT PRIOR TO INSTALLING THE SOCKS.

COMPOST SOCK WASHOUT DETAIL

STANDARD WORKSHEET #21
Temporary and Permanent Vegetative Stabilization Specifications

PROJECT NAME: 1720 W. CHESTER PIKE
LOCATION: WILLISTOWN TWP., CHESTER COUNTY, PA.
PREPARED BY: JJ DATE: AUGUST 6, 2018
CHECKED BY: _____ DATE: _____

SPECIFICATIONS: The Department recommends the use of the Penn State publication "Erosion Control & Conservation Plantings on Noncropland" as the standard to use for the selection of species, seed specifications, mixtures, liming and fertilizing, time of seeding, and seeding methods. Specifications for these items may also be obtained from Penn DOT's Publication # 408, Section 804 or by contacting the applicable county conservation district. Upon selection of a reference, that reference should be used to provide all specifications for seeding, mulching, and soil amendments. The following specification will be used for this project:

(TEMPORARY)
*SPECIES: ANNUAL RYEGRASS
% PURE LIVE SEED: 88.20 %
APPLICATION RATE: 48.4 LB./ACRE
FERTILIZER TYPE: 10–10–10 (X-X-X)
FERTILIZER APPL. RATE: 500 LB./ACRE
LIMING RATE: 1 T./ACRE
MULCH TYPE: STRAW OR HAY
MULCHING RATE: 3 T./ACRE

(PERMANENT) TOPSOIL PLACEMENT DEPTH: 4–8 IN.
*SPECIES: PERENNIAL RYEGRASS MIXTURE/CREEPING FESCUE OR CHEWINGS FESCUE/KENTUCKY BLUEGRASS MIXTURE
% PURE LIVE SEED: 88.2/83.3/78.4 %
APPLICATION RATE 19.4/29.0/53.2 LB./ACRE
FERTILIZER TYPE: 10–10–20 (X-X-X)
FERTILIZER APPL. RATE: 1000 LB./ACRE
LIMING RATE: 6 T./ACRE
MULCH TYPE: STRAW OR HAY
MULCHING RATE: 3 T./ACRE
ANCHOR MATERIAL: CELLULOSE FIBER
ANCHORING METHOD: SPRAYED
RATE OF ANCHOR MATERIAL APPL.: 1800 LB./ACRE
SEEDING SEASON DATES: (MARCH 15–JUNE 1) & (AUGUST 1–OCTOBER 15)

(PERMANENT – STEEP SLOPE)
TOPSOIL PLACEMENT DEPTH: 4–8 IN.
*SPECIES: TALL FESCUE/CREEPING FESCUE OR CHEWINGS FESCUE/ANNUAL RYEGRASS
% PURE LIVE SEED: 83.3/83.3/88.2 %
APPLICATION RATE: 61.0/30.5/10.2 LB./ACRE
FERTILIZER TYPE: 10–10–20 (X-X-X)
FERTILIZER APPL. RATE: 1000 LB./ACRE
LIMING RATE: 6 T./ACRE
MULCH TYPE: STRAW OR HAY
MULCHING RATE: 3 T./ACRE
ANCHOR MATERIAL: CELLULOSE FIBER
ANCHORING METHOD: SPRAYED
RATE OF ANCHOR MATERIAL APPL.: 2000 LB./ACRE
SEEDING SEASON DATES: (FESCUE (MARCH 15–JUNE 1) & (AUGUST 1–OCTOBER 15)) (RYE–3/1 – 10/15)

*If more than one species is used, indicate application rate for each species.
Note: This worksheet should be added to the plan drawings.

NOTES:
1. AREAS WHICH ARE TO BE TOPSOILED SHALL BE SCARIFIED TO A MINIMUM DEPTH OF 3 TO 5 INCHES (6 TO 12 INCHES ON COMPACTED SOILS) PRIOR TO PLACEMENT OF TOPSOIL. AREAS TO BE VEGETATED SHALL HAVE A MINIMUM OF 4 INCHES OF TOPSOIL IN PLACE PRIOR TO SEEDING AND MULCHING.
2. IMMEDIATELY AFTER EARTH DISTURBANCE ACTIVITIES CEASE, THE OPERATOR SHALL STABILIZE ANY AREAS DISTURBED BY THE ACTIVITIES. DURING NON-GERMINATING PERIODS, MULCH MUST BE APPLIED AT THE SPECIFIED RATES. DISTURBED AREAS WHICH ARE NOT AT FINISHED GRADE AND WHICH WILL BE RE-DISTURBED WITHIN 1 YEAR MUST BE STABILIZED IN ACCORDANCE WITH THE TEMPORARY VEGETATIVE STABILIZATION SPECIFICATIONS. DISTURBED AREAS WHICH ARE AT FINISHED GRADE OR WHICH WILL NOT BE RE-DISTURBED WITHIN 1 YEAR MUST BE STABILIZED IN ACCORDANCE WITH THE PERMANENT VEGETATIVE STABILIZATION SPECIFICATIONS.
3. UPON COMPLETION OR TEMPORARY CESSATION OF THE EARTH DISTURBANCE ACTIVITY THAT WILL EXCEED 4 DAYS, OR ANY STAGE THEREOF, THE PROJECT SITE SHALL BE IMMEDIATELY STABILIZED WITH THE APPROPRIATE TEMPORARY OR PERMANENT STABILIZATION.
4. SOIL TESTING SHOULD BE COMPLETED PRIOR TO SEEDING AND MULCHING TO DETERMINE THE PROPER SOIL AMENDMENTS AND APPLICATION RATES FOR THE PROPOSED SEED MIXTURES. IF SOIL TESTS ARE NOT COMPLETED SOIL AMENDMENTS SHOULD BE ADDED AT THE RATES SPECIFIED BY THE SELECTED SEEDING REFERENCE ABOVE.
5. STRAW OR HAY MULCH SHOULD BE ANCHORED OR TACKIFIED IMMEDIATELY AFTER APPLICATION TO PREVENT BEING WINDBLOWN. A TRACTOR DRAWN IMPLEMENT MAY BE USED TO "CRIMP" THE STRAW OR HAY INTO THE SOIL, ABOUT 3 INCHES. THIS METHOD SHOULD BE LIMITED TO SLOPES NO STEEPER THAN 3H:1V. THE MACHINERY SHOULD BE OPERATED ON THE CONTOUR.
6. NO MORE THAN 15,000 SQUARE FEET OF DISTURBED AREA AT FINAL GRADE SHOULD BE LEFT WITHOUT SEEDING AND MULCHING.

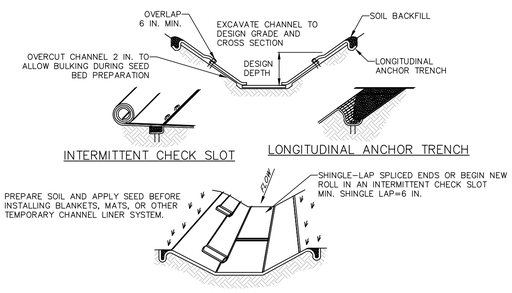

* SEE MANUFACTURER'S LINING INSTALLATION DETAIL FOR STAPLE PATTERNS, VEGETATIVE STABILIZATION FOR SOIL AMENDMENTS, SEED MIXTURES AND MULCHING INFORMATION

CHANNEL NO.	STATIONS	BOTTOM WIDTH B (FT)	DEPTH D (FT)	TOP WIDTH W (FT)	Z1 (FT)	Z2 (FT)	LINING *
PERM 1	ALL	2.5	0.90	7.9	3	3	NAG S75
PERM 2	ALL	3.0	1.02	9.1	3	3	NAG S75
PERM 3	ALL	1.0	1.21	8.3	3	3	NAG S75
PERM 4	ALL	1.0	0.97	6.8	3	3	NAG C125
PERM 5	ALL	2.0	1.49	11.0	3	3	NAG S75

NOTES:

ANCHOR TRENCHES SHALL BE INSTALLED AT BEGINNING AND END OF CHANNEL IN THE SAME MANNER AS LONGITUDINAL ANCHOR TRENCHES.

CHANNEL DIMENSIONS SHALL BE CONSTANTLY MAINTAINED. CHANNEL SHALL BE CLEANED WHENEVER TOTAL CHANNEL DEPTH IS REDUCED BY 25% AT ANY LOCATION.
SEDIMENT DEPOSITS SHALL BE REMOVED WITHIN 24 HOURS OF DISCOVERY OR AS SOON AS SOIL CONDITIONS PERMIT ACCESS TO CHANNEL WITHOUT FURTHER DAMAGE. DAMAGED LINING SHALL BE REPAIRED OR REPLACED WITHIN 48 HOURS OF DISCOVERY.

NO MORE THAN ONE THIRD OF THE SHOOT (GRASS LEAF) SHALL BE REMOVED IN ANY MOWING. GRASS HEIGHT SHALL BE MAINTAINED BETWEEN 2 AND 3 INCHES UNLESS OTHERWISE SPECIFIED. EXCESS VEGETATION SHALL BE REMOVED FROM PERMANENT CHANNELS TO ENSURE SUFFICIENT CHANNEL CAPACITY.

STANDARD CONSTRUCTION DETAIL #6-1
VEGETATED CHANNEL

NOT TO SCALE

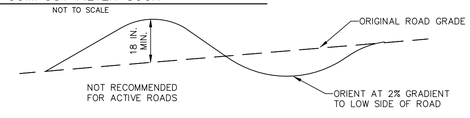

SECTION VIEW

NOTES:

WATERBARS SHALL DISCHARGE TO A STABLE AREA.

WATERBARS SHALL BE INSPECTED WEEKLY (DAILY ON ACTIVE ROADS) AND AFTER EACH RUNOFF EVENT. DAMAGED OR ERODED WATERBARS SHALL BE RESTORED TO ORIGINAL DIMENSIONS WITHIN 24 HOURS OF INSPECTION.

MAINTENANCE OF WATERBARS SHALL BE PROVIDED UNTIL ROADWAY, SKIDTRAIL, OR RIGHT-OF-WAY HAS ACHIEVED PERMANENT STABILIZATION.

WATERBARS ON RETIRED ROADWAYS, SKIDTRAILS, AND RIGHT-OF-WAYS SHALL BE LEFT IN PLACE AFTER PERMANENT STABILIZATION HAS BEEN ACHIEVED.

SEE PA DEP EROSION CONTROL MANUAL TABLE 3.1 FOR WATERBAR SPACING.

STANDARD CONSTRUCTION DETAIL #3-5
WATERBAR

NOT TO SCALE

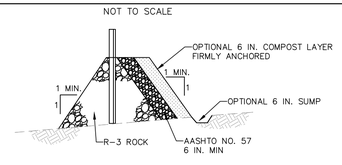

OUTLET CROSS-SECTION

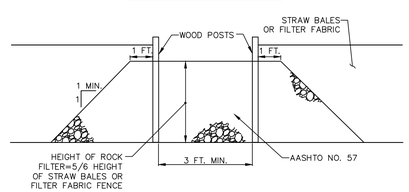

UP-SLOPE FACE

NOTES:

A ROCK FILTER OUTLET SHALL BE INSTALLED WHERE FAILURE OF A SILT FENCE OR STRAW BALE BARRIER HAS OCCURRED DUE TO CONCENTRATED FLOW. ANCHORED COMPOST LAYER SHALL BE USED ON UPSLOPE FACE IN HQ AND EV WATERSHEDS.

SEDIMENT SHALL BE REMOVED WHEN ACCUMULATIONS REACH 1/3 THE HEIGHT OF THE OUTLET.

STANDARD CONSTRUCTION DETAIL #4-6
ROCK FILTER OUTLET

NOT TO SCALE

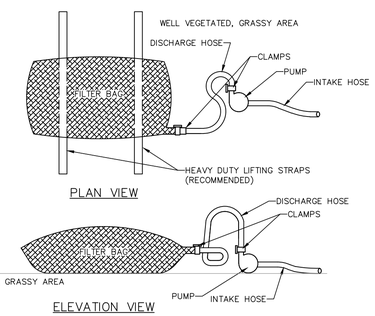

NOTES:

LOW VOLUME FILTER BAGS SHALL BE MADE FROM NON-WOVEN GEOTEXTILE MATERIAL SEWN WITH HIGH STRENGTH, DOUBLE STITCHED "J" TYPE SEAMS. THEY SHALL BE CAPABLE OF TRAPPING PARTICLES LARGER THAN 150 MICRONS. HIGH VOLUME FILTER BAGS SHALL BE MADE FROM WOVEN GEOTEXTILES THAT MEET THE FOLLOWING STANDARDS:

PROPERTY	TEST METHOD	MINIMUM STANDARD
AVG. WIDE WIDTH STRENGTH	ASTM D-4884	60 LB/IN
GRAB TENSILE	ASTM D-4632	205 LB
PUNCTURE	ASTM D-4833	110 LB
MULLEN BURST	ASTM D-3786	350 PSI
UV RESISTANCE	ASTM D-4355	70%
AOS % RETAINED	ASTM D-4751	80 SIEVE

A SUITABLE MEANS OF ACCESSING THE BAG WITH MACHINERY REQUIRED FOR DISPOSAL PURPOSES SHALL BE PROVIDED. FILTER BAGS SHALL BE REPLACED WHEN THEY BECOME 1/2 FULL OF SEDIMENT. SPARE BAGS SHALL BE KEPT AVAILABLE FOR REPLACEMENT OF THOSE THAT HAVE FAILED OR ARE FILLED. BAGS SHALL BE PLACED ON STRAPS TO FACILITATE REMOVAL UNLESS BAGS COME WITH LIFTING STRAPS ALREADY ATTACHED.

BAGS SHALL BE LOCATED IN WELL-VEGETATED (GRASSY) AREA, AND DISCHARGE ONTO STABLE, EROSION RESISTANT AREAS. WHERE THIS IS NOT POSSIBLE, A GEOTEXTILE UNDERLAYMENT AND FLOW PATH SHALL BE PROVIDED. BAGS MAY BE PLACED ON FILTER STONE TO INCREASE DISCHARGE CAPACITY. BAGS SHALL NOT BE PLACED ON SLOPES GREATER THAN 5%. FOR SLOPES EXCEEDING 5%, CLEAN ROCK OR OTHER NON-ERODIBLE AND NON-POLLUTING MATERIAL MAY BE PLACED UNDER THE BAG TO REDUCE SLOPE STEEPNESS.

NO DOWNSLOPE SEDIMENT BARRIER IS REQUIRED FOR MOST INSTALLATIONS. COMPOST BERM OR COMPOST FILTER SOCK SHALL BE INSTALLED BELOW BAGS LOCATED IN HQ OR EV WATERSHEDS, WITHIN 50 FEET OF ANY RECEIVING SURFACE WATER OR WHERE GRASSY AREA IS NOT AVAILABLE.

THE PUMP DISCHARGE HOSE SHALL BE INSERTED INTO THE BAGS IN THE MANNER SPECIFIED BY THE MANUFACTURER AND SECURELY CLAMPED. A PIECE OF PVC PIPE IS RECOMMENDED FOR THIS PURPOSE.

THE PUMPING RATE SHALL BE NO GREATER THAN 750 GPM OR 1/2 THE MAXIMUM SPECIFIED BY THE MANUFACTURER, WHICHEVER IS LESS. PUMP INTAKE'S SHALL BE FLOATING AND SCREENED.

FILTER BAGS SHALL BE INSPECTED DAILY. IF ANY PROBLEM IS DETECTED, PUMPING SHALL CEASE IMMEDIATELY AND NOT RESUME UNTIL THE PROBLEM IS CORRECTED.

STANDARD CONSTRUCTION DETAIL #3-16
PUMPED WATER FILTER BAG

NOT TO SCALE

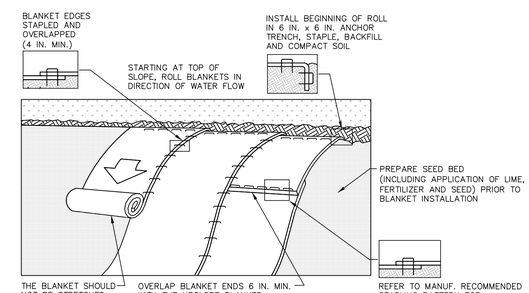

NOTES:

SEED AND SOIL AMENDMENTS SHALL BE APPLIED ACCORDING TO THE RATES IN THE PLAN DRAWINGS PRIOR TO INSTALLING THE BLANKET.

PROVIDE ANCHOR TRENCH AT TOE OF SLOPE IN SIMILAR FASHION AS AT TOP OF SLOPE.

SLOPE SURFACE SHALL BE FREE OF ROCKS, CLODS, STICKS, AND GRASS.

BLANKET SHALL HAVE GOOD CONTINUOUS CONTACT WITH UNDERLYING SOIL THROUGHOUT ENTIRE LENGTH. LAY BLANKET LOOSELY AND STAKE OR STAPLE TO MAINTAIN DIRECT CONTACT WITH SOIL. DO NOT STRETCH BLANKET.

THE BLANKET SHALL BE STAPLED IN ACCORDANCE WITH THE MANUFACTURER'S RECOMMENDATIONS.

BLANKETED AREAS SHALL BE INSPECTED WEEKLY AND AFTER EACH RUNOFF EVENT UNTIL PERENNIAL VEGETATION IS ESTABLISHED TO A MINIMUM UNIFORM 70% COVERAGE THROUGHOUT THE BLANKETED AREA. DAMAGED OR DISPLACED BLANKETS SHALL BE RESTORED OR REPLACED WITHIN 4 CALENDAR DAYS.

STANDARD CONSTRUCTION DETAIL #11-1
EROSION CONTROL BLANKET INSTALLATION

NOT TO SCALE

© COPYRIGHT BURSICH ASSOCIATES, INC., 2018
THE DRAWINGS, SPECIFICATIONS, PLANS, REPORTS, PAPERS, DATA, NOTES AND OTHER DOCUMENTS AND INSTRUMENTS PREPARED BY BURSICH ASSOCIATES, INC. AS INSTRUMENTS OF SERVICE SHALL REMAIN THE PROPERTY OF BURSICH ASSOCIATES, INC. AND THEREFORE SHALL RETAIN ALL COMMON LAW, STATUTORY AND OTHER RESERVED RIGHTS, INCLUDING THE COPYRIGHT THERETO. THE REPRODUCTION, DISTRIBUTION AND USE OF THE DOCUMENTS WITHOUT THE EXPRESS WRITTEN CONSENT OF BURSICH ASSOCIATES, INC. IS STRICTLY PROHIBITED. ANY USE, REUSE OR MODIFICATION BY THIRD PARTIES WITHOUT WRITTEN CONSENT OF BURSICH ASSOCIATES, INC. SHALL BE AT THE USER'S SOLE RISK AND WITHOUT LIABILITY TO THE USER AND BURSICH ASSOCIATES, INC. WHICH SHALL INDEMNIFY AND SAVE HARMLESS BURSICH ASSOCIATES, INC. FOR ALL CLAIMS, DAMAGES, LOSSES AND EXPENSES ARISING FROM THE USE THEREFROM.

NO.	REVISION	DATE	BY
2	REVISED PER TOWNSHIP REVIEW LETTER DATED 12/11/18	1/30/19	BG
1	REVISED PER TOWNSHIP REVIEW LETTERS DATED 9/13/18 & 10/26/18	11/5/18	BG

SEAL

NORTH

MANAGER NF	
DESIGN KK	CHKD. BY
DRAFT BG	CHKD. BY
FILE ROU-01	DATE 8/9/2018
NOTES	SCALE NTS

BURSICH
Sharing your Vision

Corporate Headquarters
2129 East High Street
Pottstown, PA 19464
610-323-4040

Southampton Office
706 Lakeside Drive
Southampton, PA 18966

www.bursich.com

CLIENT
ROUSE/CHAMBERLIN, LTD
500 EXTON COMMONS
EXTON, PA 19341

SUBJECT
EROSION & SEDIMENT CONTROL DETAILS

PRESERVE AT WILLISTOWN

WILLISTOWN TOWNSHIP, CHESTER COUNTY, PENNSYLVANIA

JOB NO. 187872
SHEET NO. 3 OF 6
DWG. NO. ES387872

P:\ROU-01\187872-00\dwg\LD_Plan\ES187872.dwg

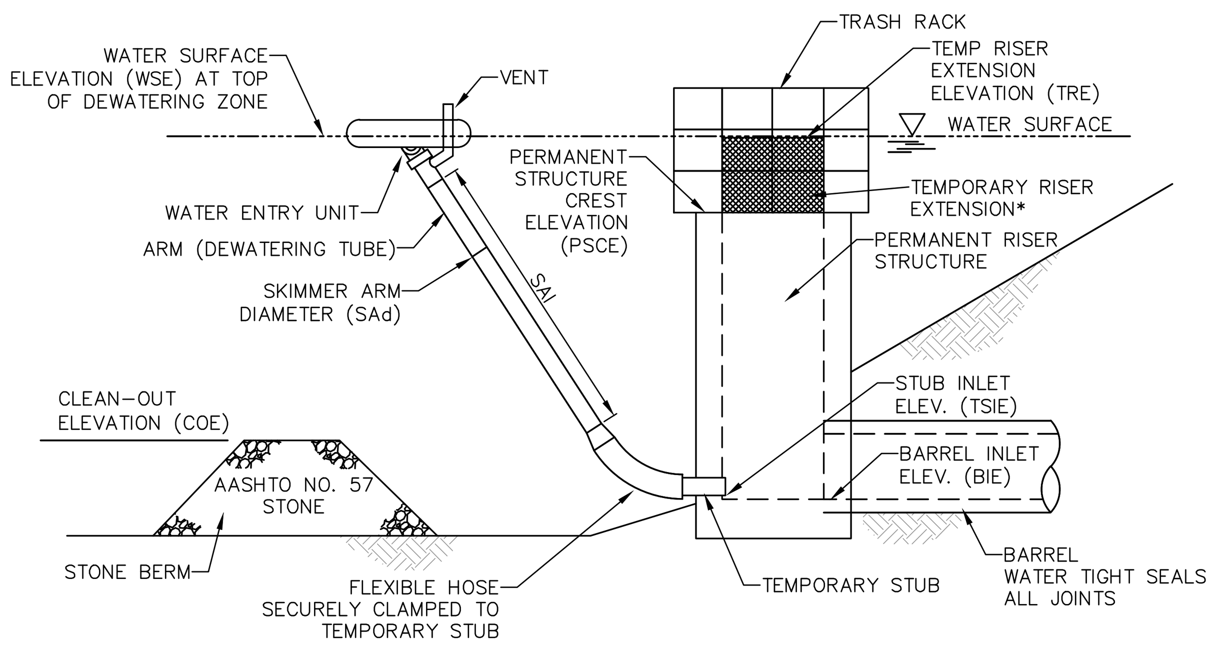

SECTION VIEW

BASIN NO.	WATER SURFACE ELEV. WSE (FT)	SKIMMER								
		ORIFICE		ARM			FLEXIBLE HOSE			
		DIA. (IN)	HEAD (FT)	DIA. SAd (IN)	LENGTH SAL (FT)	MAT'L	DIA. (IN)	LENGTH (IN)	MAT'L	
A	354.00	2.5	0.25	6	10	PVC	6	36	PVC	

TEMPORARY STUB			PERMANENT RISER			RISER EXTENSION			BARREL
INSIDE DIA (IN)	INVERT ELEV TSIE (FT)	MAT'L	CREST ELEV PSCE (FT)	HORIZ OPENING LENGTH El (IN)	HORIZ OPENING WIDTH Ew (IN)	CREST ELEV TRE (FT)	HORIZ OPENING LENGTH (IN)	HORIZ OPENING WIDTH (IN)	INLET ELEV BIE (FT)
6	347.50	PVC	354.00	48	24	N/A	N/A	N/A	346.00

NOTES:

ALL ORIFICES ON PERMANENT RISER BELOW TEMPORARY RISER EXTENSION SHALL HAVE WATER-TIGHT TEMPORARY SEALS PROVIDED. TEMPORARY STUB INVERT ELEVATION SHALL BE SET AT OR BELOW SEDIMENT CLEAN-OUT ELEVATION.

A ROPE SHALL BE ATTACHED TO THE SKIMMER ARM TO FACILITATE ACCESS TO THE SKIMMER ONCE INSTALLED.

SKIMMER SHALL BE INSPECTED WEEKLY AND AFTER EACH RUNOFF EVENT.
ANY MALFUNCTIONING SKIMMER SHALL BE REPAIRED OR REPLACED WITHIN 24 HOURS OF INSPECTION.

ICE OR SEDIMENT BUILDUP AROUND THE PRINCIPAL SPILLWAY SHALL BE REMOVED SO AS TO ALLOW THE SKIMMER TO RESPOND TO FLUCTUATING WATER ELEVATIONS.

SEDIMENT SHALL BE REMOVED FROM THE BASIN WHEN IT REACHES THE LEVEL MARKED ON THE SEDIMENT CLEAN-OUT STAKE OR THE TOP OF THE STONE BERM. SEE STANDARD CONSTRUCTION DETAIL #7-3 FOR CONFIGURATION OF STONE BERM.

STANDARD CONSTRUCTION DETAIL #7-2
SKIMMER ATTACHED TO PERMANENT RISER

NOT TO SCALE

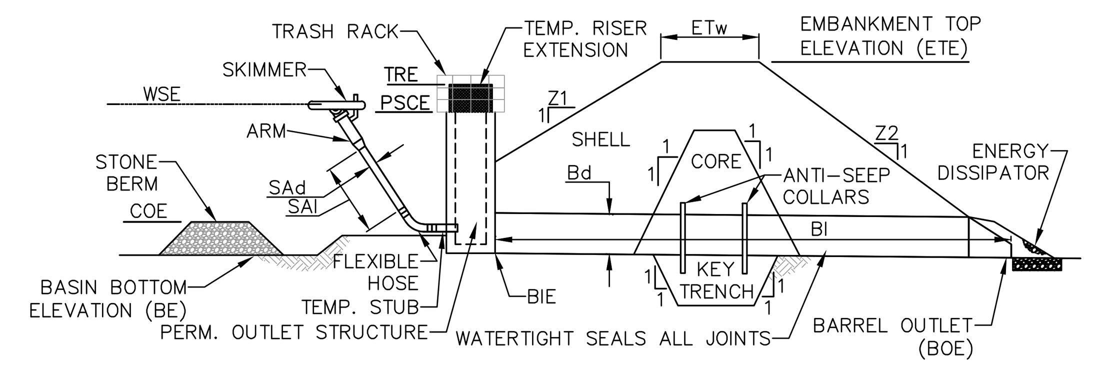

BASIN NO.	Z1 (FT)	Z2 (FT)	TEMP RISER EXT. ELEV TRE (FT)	EMBANKMENT TOP ELEV ETE (FT)	EMBANKMENT TOP WIDTH ETw (FT)	EMBANKMENT KEY TRENCH DEPTH (FT)	EMBANKMENT KEY TRENCH WIDTH (FT)	CLEAN OUT ELEV COE (FT)	BOTTOM ELEV BE (FT)
A	3	3	N/A	356.0	10	4	4	350.25	349.00

SKIMMER			OUTLET BARREL				
DIA SAd (IN)	LENGTH SAi (FT)	MAT'L	DIA Bd (IN)	INLET ELEV BIE (FT)	MAT'L	LENGTH Bl (FT)	OUTLET ELEV BOE (FT)
6	10	PVC	18	346.00	RCP	75	339.97

NOTES:

SEDIMENT BASINS, INCLUDING ALL APPURTENANT WORKS, SHALL BE CONSTRUCTED TO THE DETAIL AND DIMENSIONS SHOWN ON THE E&S PLAN DRAWINGS.

AREA UNDER EMBANKMENT SHALL BE CLEARED, GRUBBED, AND STRIPPED OF TOPSOIL TO A DEPTH OF TWO FEET PRIOR TO ANY PLACEMENT AND COMPACTION OF EARTHEN FILL. IN ORDER TO FACILITATE MAINTENANCE AND RESTORATION, THE POOL AREA SHALL BE CLEARED OF ALL BRUSH, TREES, AND OBJECTIONABLE MATERIAL. FILL MATERIAL FOR THE EMBANKMENTS SHALL BE FREE OF ROOTS, OR OTHER WOODY VEGETATION, ORGANIC MATERIAL, LARGE STONES, AND OTHER OBJECTIONABLE MATERIALS. THE EMBANKMENT SHALL BE COMPACTED IN LAYERED LIFTS OF NOT MORE THAN 6 TO 9 IN. THE MAXIMUM ROCK SIZE SHALL BE NO GREATER THAN 2/3 THE LIFT THICKNESS.

UPON COMPLETION, THE EMBANKMENT SHALL BE SEEDED, MULCHED, BLANKETED OR OTHERWISE STABILIZED ACCORDING TO THE SPECIFICATIONS OF THE E&S PLAN DRAWINGS. TREES SHALL NOT BE PLANTED ON THE EMBANKMENT.

INSPECT ALL SEDIMENT BASINS ON AT LEAST A WEEKLY BASIS AND AFTER EACH RUNOFF EVENT. PROVIDE ACCESS FOR SEDIMENT REMOVAL AND OTHER REQUIRED MAINTENANCE ACTIVITIES. A CLEAN OUT STAKE SHALL BE PLACED NEAR THE CENTER OF EACH BASIN. ACCUMULATED SEDIMENT SHALL BE REMOVED WHEN IT HAS REACHED THE CLEAN OUT ELEVATION ON THE STAKE AND THE BASIN RESTORED TO ITS ORIGINAL DIMENSIONS. DISPOSE OF MATERIALS REMOVED FROM THE BASIN IN THE MANNER DESCRIBED IN THE E&S PLAN.

BASIN EMBANKMENTS, SPILLWAYS, AND OUTLETS SHALL BE INSPECTED FOR EROSION, PIPING AND SETTLEMENT. NECESSARY REPAIRS SHALL BE IMMEDIATELY. DISPLACED RIPRAP WITHIN THE OUTLET ENERGY DISSIPATER SHALL BE REPLACED IMMEDIATELY.

ACCUMULATED SEDIMENT SHALL BE REMOVED AND DISTURBED AREAS SHALL BE STABILIZED INSIDE THE BASIN BEFORE CONVERSION TO A STORMWATER MANAGEMENT FACILITY. THE DEVICE SHOWN IN STANDARD CONSTRUCTION DETAIL #7-16 MAY BE USED TO DEWATER SATURATED SEDIMENT PRIOR TO ITS REMOVAL. ROCK FILTERS SHALL BE ADDED AS NECESSARY.

STANDARD CONSTRUCTION DETAIL #7-4
SEDIMENT BASIN EMBANKMENT AND SPILLWAY DETAILS – SKIMMER

NOT TO SCALE

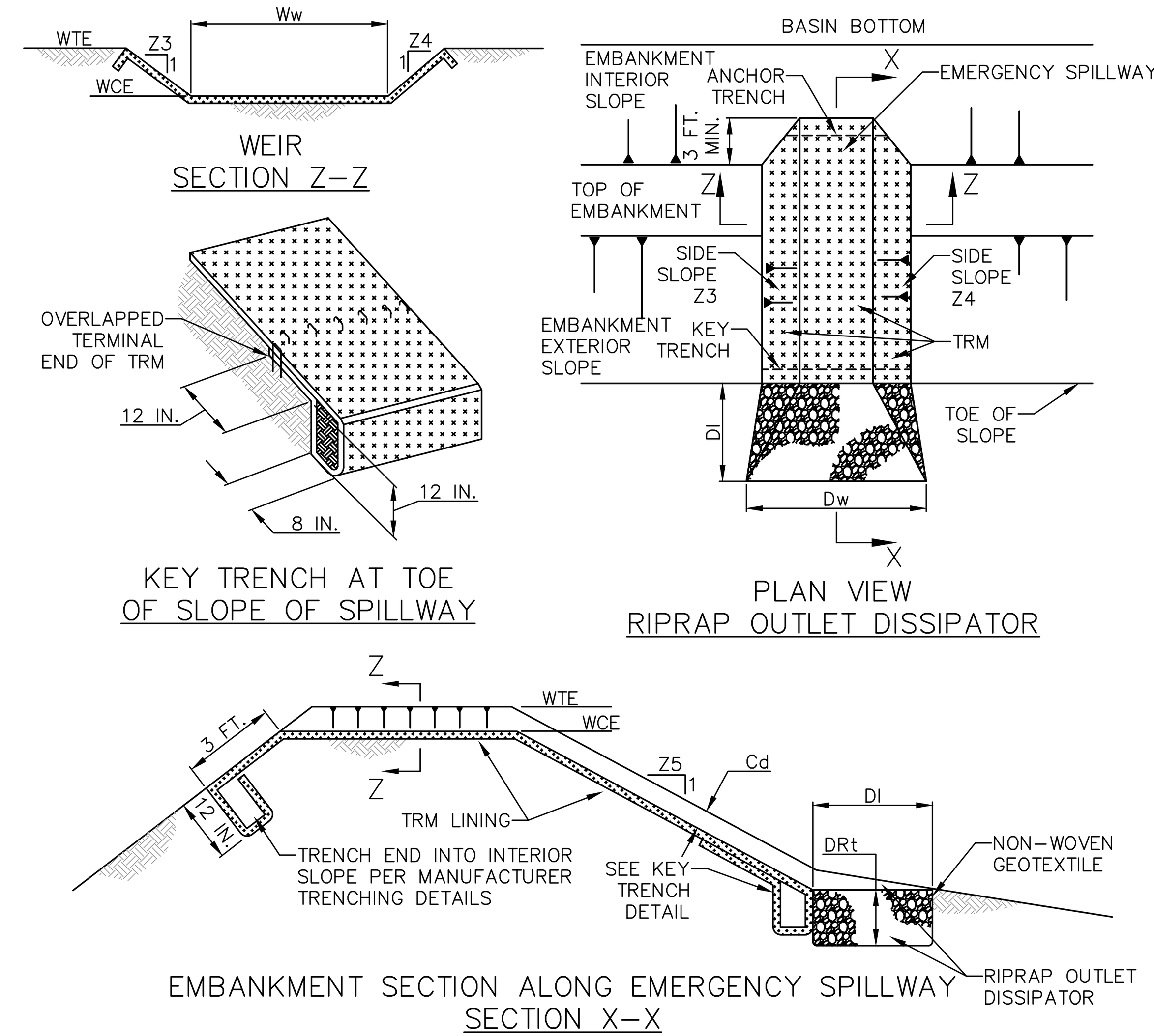

BASIN NO.	WEIR Z3 (FT)	WEIR Z4 (FT)	WEIR TOP ELEV WTE (FT)	WEIR CREST ELEV WCE (FT)	WEIR WIDTH Ww (FT)	LINING TRM TYPE	LINING STAPLE PATTERN	CHANNEL Z5 (FT)	CHANNEL DEPTH Cd (FT)	DISSIPATOR LENGTH Dl (FT)	DISSIPATOR WIDTH Dw (FT)	DISSIPATOR RIPRAP SIZE (R-_)	DISSIPATOR RIPRAP THICK. DRt (IN)
A	3	3	356.0	354.5	64	NAG P300	NAG	3	1.0	15	64	3	9

NOTES:

HEAVY EQUIPMENT SHALL NOT CROSS OVER SPILLWAY WITHOUT PRECAUTIONS TAKEN TO PROTECT TRM LINING.

DISPLACED LINER WITHIN THE SPILLWAY AND/OR OUTLET CHANNEL SHALL BE REPLACED IMMEDIATELY.

RIPRAP AT TOE OF EMBANKMENT SHALL BE EXTENDED A SUFFICIENT LENGTH IN BOTH DIRECTIONS TO PREVENT SCOUR.

THE USE OF BAFFLES THAT REQUIRE SUPPORT POSTS ARE RESTRICTED FROM USE IN BASINS REQUIRING IMPERVIOUS LINERS.

STANDARD CONSTRUCTION DETAIL #7-13
SEDIMENT BASIN EMERGENCY SPILLWAY WITH TRM LINING

NOT TO SCALE

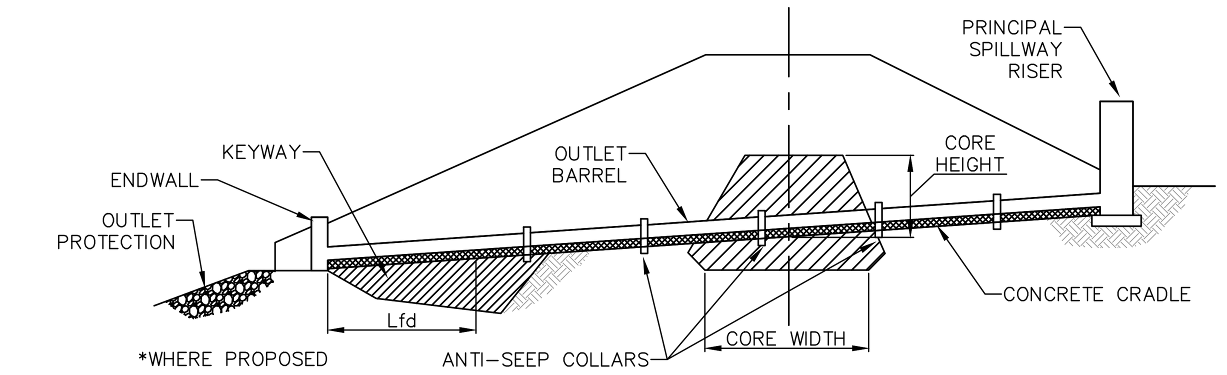

EMBANKMENT ALONG PRINCIPAL SPILLWAY

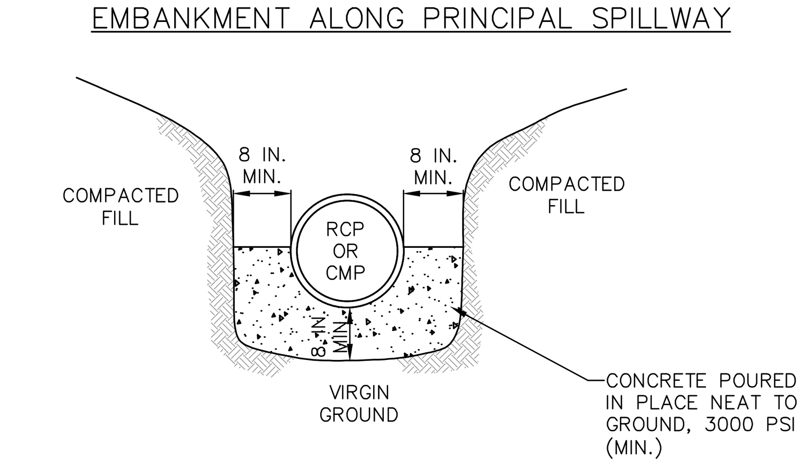

CROSS-SECTION AT OUTLET BARREL

NOTES:

A CONCRETE CRADLE MAY BE USED IN CONJUNCTION WITH ANTI-SEEP COLLARS.

ANTI-SEEP COLLAR NUMBER, SIZE AND SPACING SHALL BE AS SHOWN ELSEWHERE IN PLAN.

STANDARD CONSTRUCTION DETAIL #7-17
CONCRETE CRADLE FOR BASIN OR TRAP OUTLET BARREL

NOT TO SCALE

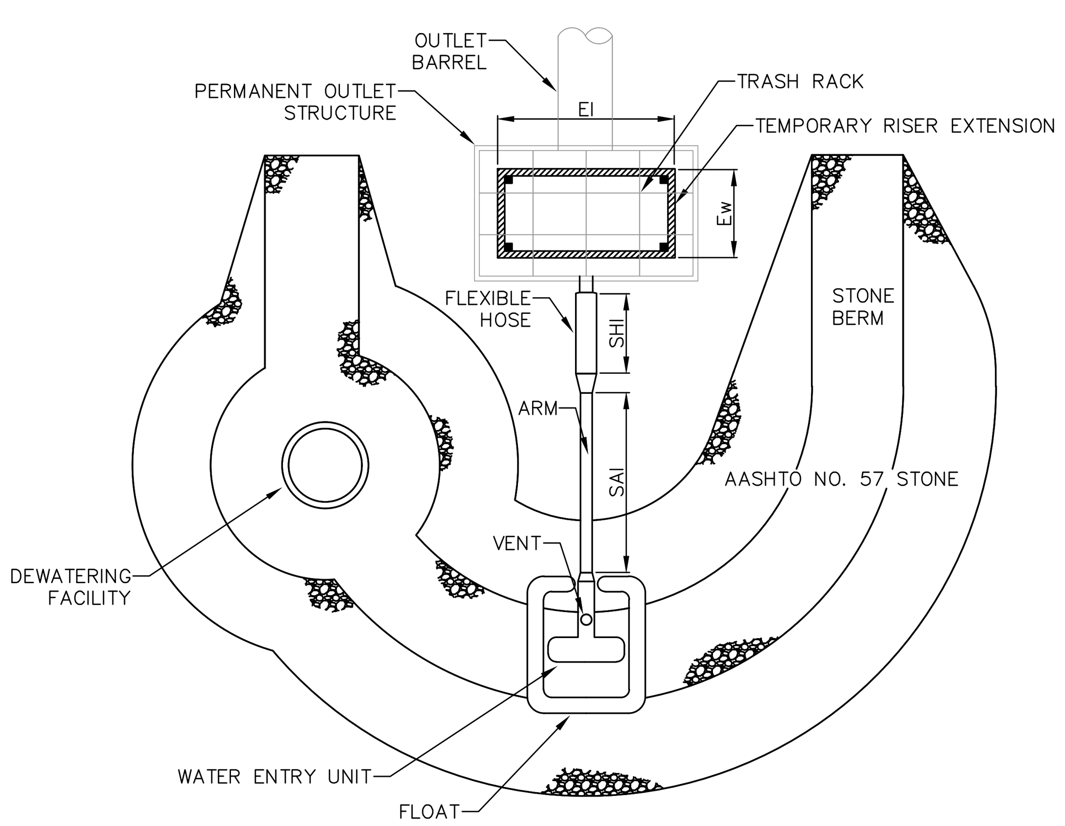

PLAN VIEW

NOTES:

NO GUIDE RAILS SHALL BE REQUIRED FOR THIS INSTALLATION.

THIS DETAIL SHALL BE USED IN CONJUNCTION WITH STANDARD CONSTRUCTION DETAILS #7-2 AND #7-4.

STANDARD CONSTRUCTION DETAIL #7-3
SKIMMER WITH STONE LANDING BERM

NOT TO SCALE

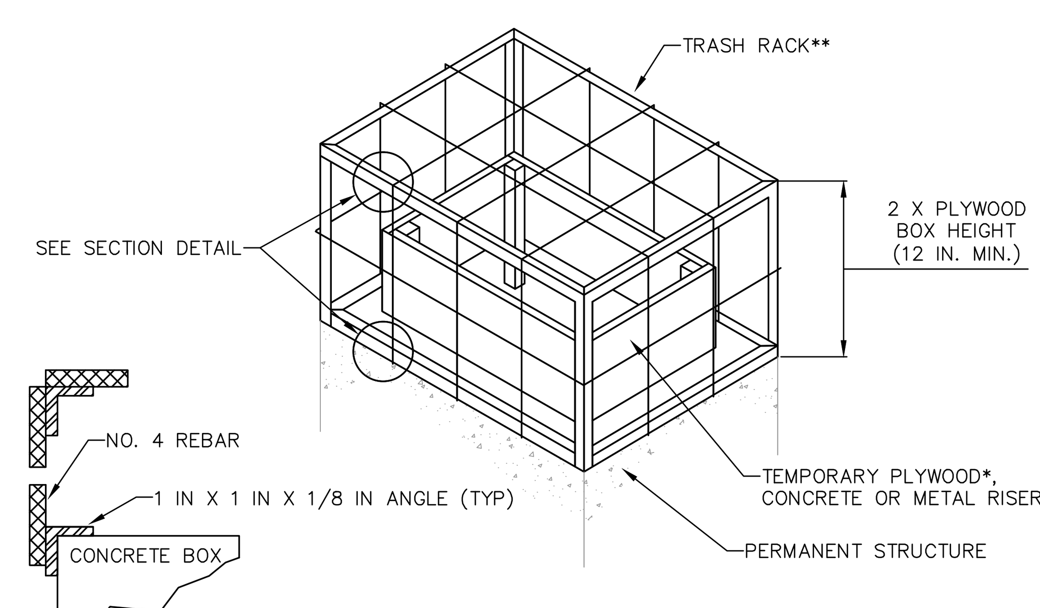

SECTION DETAIL

* 3/4 IN. PRESSURE TREATED PLYWOOD BOX WITH 2 IN. X 2 IN. PRESSURE TREATED CORNER SUPPORTS, SET INTO 1-1/2 IN. GRATE OFFSETS, CAULK ALL SEAMS TO FORM WATERTIGHT SEALS.
** TRASH RACK COMPOSED OF 1 IN. X 1 IN. X 1/8 IN. L (TYP.) AND #4 BARS (TYP.) WELDED TO THE ANGLES AND AT EACH INTERSECTION OF THE BARS; #4 BARS SPACED AT HALF THE DIAMETER OF THE BARREL MAX.

NOTES:

BOX SHALL BE BOLTED, STRAPPED, OR OTHERWISE SECURED TO THE PERMANENT RISER.

TOP OF TEMPORARY RISER EXTENSION SHALL BE AT LEAST AS HIGH AS SEDIMENT BASIN TEMPORARY RISER AND SHALL BE 6 IN. (MINIMUM) BELOW CREST OF EMERGENCY SPILLWAY.

ALL JOINTS SHALL BE WATER TIGHT.

CLOGGED OR DAMAGED SPILLWAYS SHALL BE REPAIRED IMMEDIATELY. TRASH AND OTHER DEBRIS SHALL BE REMOVED FROM THE BASIN AND RISER.

STANDARD CONSTRUCTION DETAIL #7-10
TEMPORARY RISER EXTENSION AND TRASH RACK FOR PERMANENT STRUCTURE

NOT TO SCALE

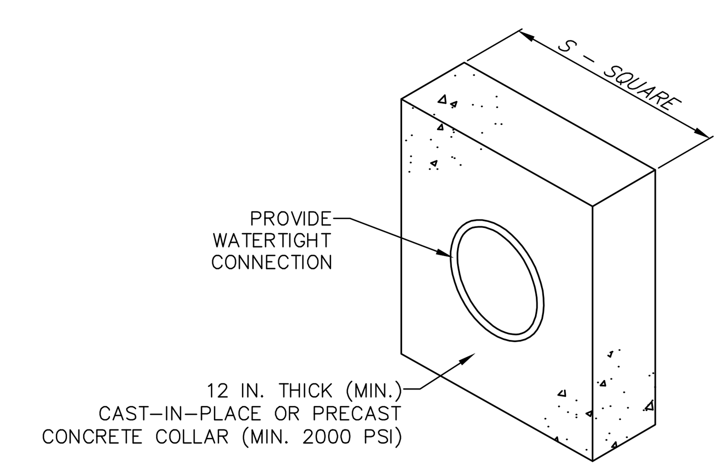

BASIN OR TRAP NO.	PIPE SIZE (IN)	S (IN)	NO. OF COLLARS	RISER TO FIRST COLLAR (FT)	COLLAR SPACING (FT)
A	18	72	2	20	12
B	15	72	2	13	10

NOTES:

ALL COLLARS SHALL BE INSTALLED SO AS TO BE WATERTIGHT.

COLLAR SIZE AND SPACING SHALL BE AS INDICATED WITHIN TABLE.

STANDARD CONSTRUCTION DETAIL #7-16
CONCRETE ANTI-SEEP COLLAR FOR PERMANENT BASINS OR TRAPS

NOT TO SCALE

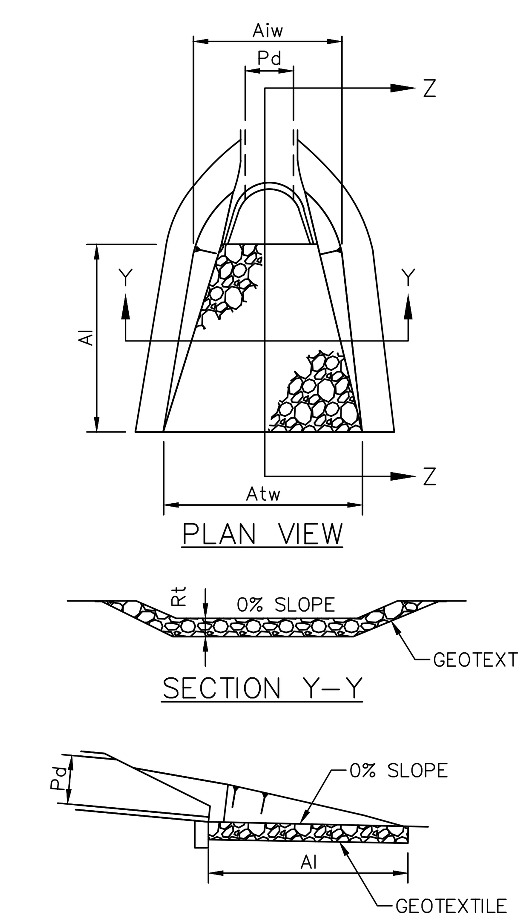

OUTLET NO.	PIPE DIA Pd (IN)	RIPRAP SIZE R-_	RIPRAP THICK. Rt (IN)	APRON LENGTH Al (FT)	APRON INITIAL WIDTH Aiw (FT)	APRON TERMINAL WIDTH Atw (FT)
A3	30	4	18	16	7.5	23.5
A5	30	4	18	16	7.5	23.5
B1	15	5	27	8	3.75	11.75
B3	15	3	9	8	3.75	11.75

NOTES:

ALL APRONS SHALL BE CONSTRUCTED TO THE DIMENSIONS SHOWN. TERMINAL WIDTHS SHALL BE ADJUSTED AS NECESSARY TO MATCH RECEIVING CHANNELS.

ALL APRONS SHALL BE INSPECTED AT LEAST WEEKLY AND AFTER EACH RUNOFF EVENT. DISPLACED RIPRAP WITHIN THE APRON SHALL BE REPLACED IMMEDIATELY.

STANDARD CONSTRUCTION DETAIL #9-1
RIPRAP APRON AT PIPE OUTLET WITH FLARED END SECTION OR ENDWALL

NOT TO SCALE

© COPYRIGHT BURSICH ASSOCIATES, INC. 2018
ALL REPORTS, DOCUMENTS, SPECIFICATIONS, COMPUTER FILES, FIELD DATA, NOTES AND OTHER DOCUMENTS AND INSTRUMENTS PREPARED BY BURSICH ASSOCIATES, INC. AS INSTRUMENTS OF SERVICE SHALL REMAIN THE PROPERTY OF BURSICH ASSOCIATES, INC. AND THEREFORE SHALL RETAIN ALL COMMON LAW, STATUTORY AND OTHER RESERVED RIGHTS, INCLUDING THE COPYRIGHT THERETO. ANY USE, REUSE OR MODIFICATION/ALTERATION AND REPRODUCTION WITHOUT THE EXPRESS WRITTEN CONSENT OF BURSICH ASSOCIATES, INC. IS STRICTLY PROHIBITED. ANY USE, REUSE OR MODIFICATION/ALTERATION BY ANYONE WITHOUT WRITTEN CONSENT SHALL BE DEEMED AN AGREEMENT BETWEEN THE USER AND BURSICH ASSOCIATES, INC. WHICH SHALL INDEMNIFY AND SAVE HARMLESS BURSICH ASSOCIATES, INC. FOR ALL CLAIMS, DAMAGES, LOSSES AND EXPENSES ARISING FROM THE USE THEREFROM.

NO.	REVISION	DATE	BY
2	REVISED PER TOWNSHIP REVIEW LETTER DATED 12/11/18	1/30/19	BG
1	REVISED PER TOWNSHIP REVIEW LETTERS DATED 9/13/18 & 10/26/18	11/5/18	BG

SEAL

NORTH

MANAGER NF	
DESIGN KK	CHKD. BY
DRAFT BG	CHKD. BY
FILE ROU-01	DATE 8/9/2018
NOTES	SCALE NTS

BURSICH
Sharing your Vision
Corporate Headquarters
2129 East High Street
Pottstown, PA 19464
610-323-4040
Southampton Office
706 Lakeside Drive
Southampton, PA 18966
w w w . b u r s i c h . c o m

CLIENT
ROUSE/CHAMBERLIN, LTD
500 EXTON COMMONS
EXTON, PA 19341

SUBJECT
EROSION & SEDIMENT CONTROL DETAILS

PRESERVE AT WILLISTOWN

WILLISTOWN TOWNSHIP, CHESTER COUNTY, PENNSYLVANIA

JOB NO. 187872

SHEET NO. 4 OF 6

DWG. NO. ES487872

P:\ROU-01\187872-00\dwg\LD_Plan\ES187872.dwg

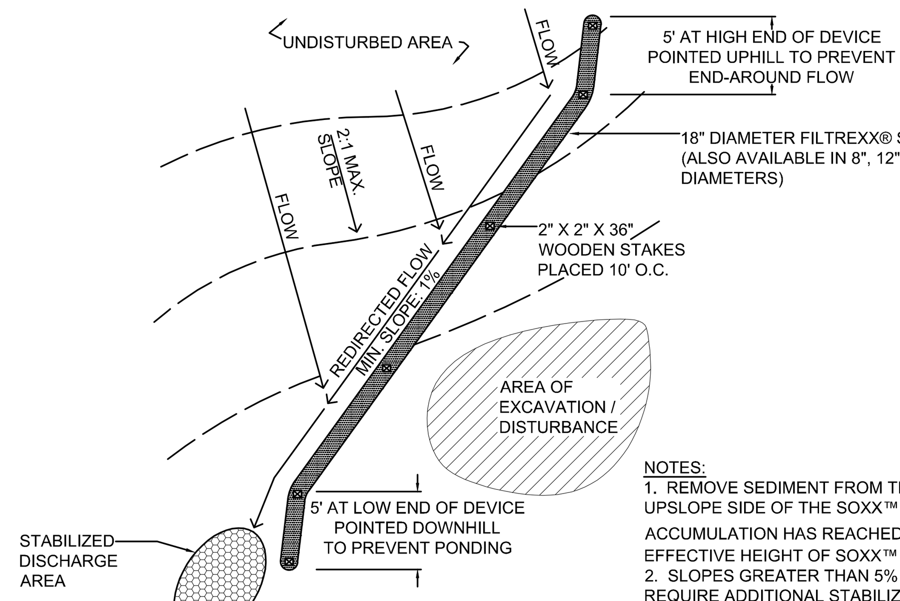

NOTES:
1. REMOVE SEDIMENT FROM THE UPSLOPE SIDE OF THE SOXX™ WHEN ACCUMULATION HAS REACHED ½ OF EFFECTIVE HEIGHT OF SOXX™
2. SLOPES GREATER THAN 5% MAY REQUIRE ADDITIONAL STABILIZATION PRACTICES
3. SOXX™ MAY BE SEEDED AT THE TIME OF INSTALLATION

FILTREXX® RUNOFF DIVERSION

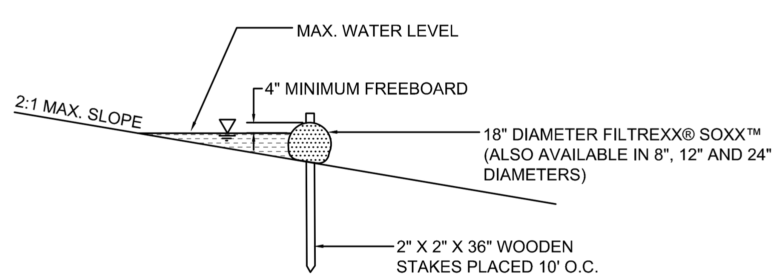

SINGLE INSTALLATION SECTION
NTS

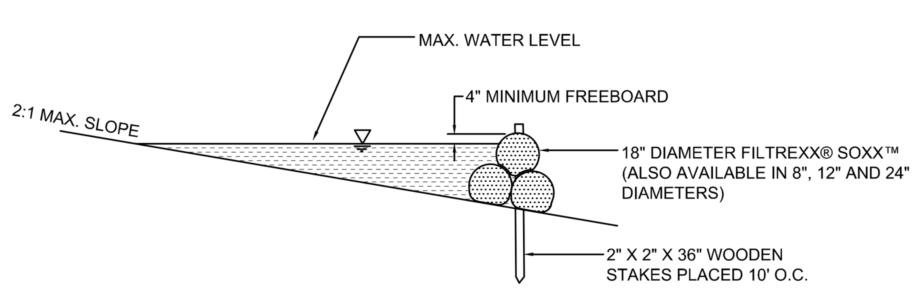

PYRAMID INSTALLATION SECTION
NTS

FILTREXX® RUNOFF DIVERSION SECTIONS
NTS

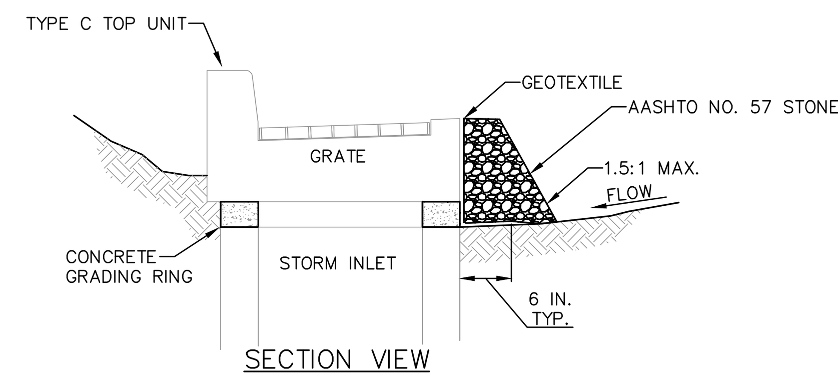

SECTION VIEW

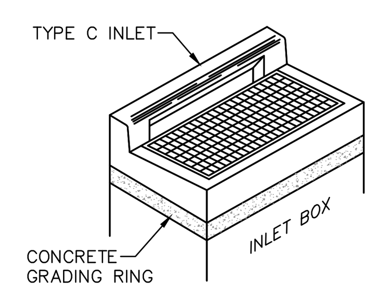

ISOMETRIC VIEW

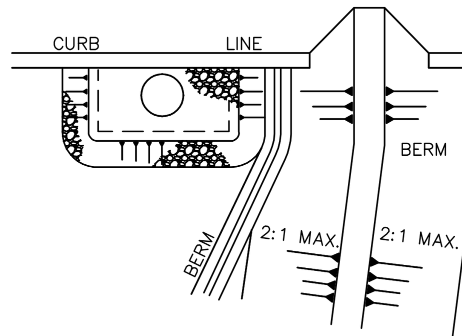

PLAN VIEW

NOTES:

INLET PROTECTION SHALL NOT BE REQUIRED FOR INLETS TRIBUTARY TO SEDIMENT BASINS OR SEDIMENT TRAPS. ALTERNATE TYPE C INLET PROTECTION CAN BE USED ON ONE ACRE MAXIMUM DRAINAGE AREA WITH 15 IN. OVERFLOW PIPE AND 4 IN. HEAD.

BERMS SHALL BE REQUIRED FOR ALL INSTALLATIONS NOT LOCATED AT LOW POINTS. EARTHEN BERMS SHALL BE STABILIZED WITH VEGETATION AND MAINTAINED UNTIL ROADWAY IS STONED OR TRIBUTARY AREA IS PERMANENTLY VEGETATED. ROAD SUBBASE BERMS SHALL BE MAINTAINED UNTIL ROADWAY IS PAVED.

INLETS SHALL BE INSPECTED WEEKLY AND AFTER EACH RUNOFF EVENT. ACCUMULATED SEDIMENT SHALL BE REMOVED WHEN IT REACHES HALF THE HEIGHT OF THE STONE. DAMAGED INSTALLATIONS SHALL BE REPAIRED OR REPLACED WITHIN 24 HOURS OF INSPECTION.

FOR SYSTEMS DISCHARGING TO HQ OR EV SURFACE WATER, A 6 INCH THICK COMPOST LAYER SHALL BE SECURELY ANCHORED ON OUTSIDE AND OVER TOP OF STONE. COMPOST SHALL MEET THE STANDARDS IN TABLE 4.2 OF THE PA DEP EROSION CONTROL MANUAL.

TEMPORARY TYPE C INLET INSTALLATION DETAIL – NOT AT GRADE
NOT TO SCALE

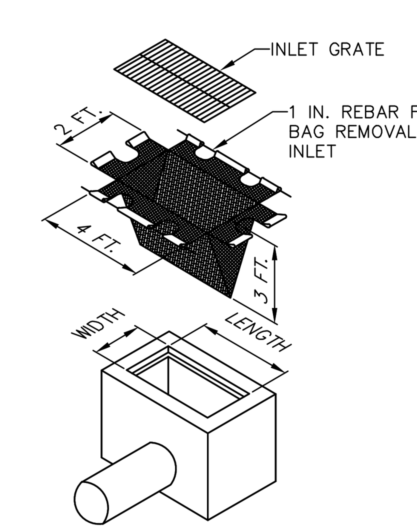

ISOMETRIC VIEW

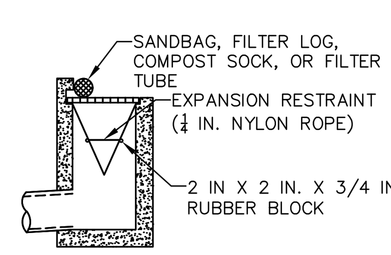

INSTALLATION DETAIL

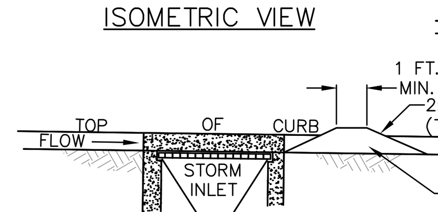

SECTION VIEW

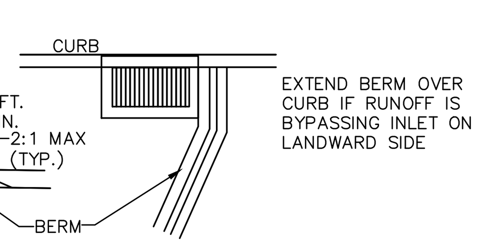

PLAN VIEW

NOTES:

MAXIMUM DRAINAGE AREA = 1/2 ACRE.

INLET PROTECTION SHALL NOT BE REQUIRED FOR INLET TRIBUTARY TO SEDIMENT BASIN OR TRAP. BERMS SHALL BE REQUIRED FOR ALL INSTALLATIONS.

ROLLED EARTHEN BERM SHALL BE MAINTAINED UNTIL ROADWAY IS STONED. ROAD SUBBASE BERM SHALL BE MAINTAINED UNTIL ROADWAY IS PAVED. SIX INCH MINIMUM HEIGHT ASPHALT BERM SHALL BE MAINTAINED UNTIL ROADWAY SURFACE RECEIVES FINAL COAT.
AT A MINIMUM, THE FABRIC SHALL HAVE A MINIMUM GRAB TENSILE STRENGTH OF 120 LBS, A MINIMUM BURST STRENGTH OF 200 PSI, AND A MINIMUM TRAPEZOIDAL TEAR STRENGTH OF 50 LBS. FILTER BAGS SHALL BE CAPABLE OF TRAPPING ALL PARTICLES NOT PASSING A NO. 40 SIEVE.

INLET FILTER BAGS SHALL BE INSPECTED ON A WEEKLY BASIS AND AFTER EACH RUNOFF EVENT. BAGS SHALL BE EMPTIED AND RINSED OR REPLACED WHEN HALF FULL OR WHEN FLOW CAPACITY HAS BEEN REDUCED SO AS TO CAUSE FLOODING OR BYPASSING OF THE INLET. DAMAGED OR CLOGGED BAGS SHALL BE REPLACED. A SUPPLY SHALL BE MAINTAINED ON SITE FOR REPLACEMENT OF BAGS. ALL NEEDED REPAIRS SHALL BE INITIATED IMMEDIATELY AFTER THE INSPECTION. DISPOSE OF ACCUMULATED SEDIMENT AS WELL AS ALL USED BAGS ACCORDING TO THE PLAN NOTES.

DO NOT USE ON MAJOR PAVED ROADWAYS WHERE PONDING MAY CAUSE TRAFFIC HAZARDS.

STANDARD CONSTRUCTION DETAIL #4–15
FILTER BAG INLET PROTECTION – TYPE C INLET
NOT TO SCALE

PROJECT NARRATIVE

THE SITE IS KNOWN AS 1720 W. CHESTER PIKE IN WILLISTOWN TOWNSHIP, CHESTER COUNTY, PENNSYLVANIA. THE PROJECT IS BOUND BY WEST CHESTER PIKE TO THE NORTH AND PRIVATE PARCELS ON THE OTHER SIDES. THE PROPOSED DEVELOPMENT FOR THIS SITE INCLUDES THE CONSTRUCTION OF 39 TOWNHOMES AND ASSOCIATED DRIVES AND PARKING AREAS ON A 12.15 ACRE PROPERTY. APPROXIMATELY 3.6 ACRES OF OPEN SPACE WILL BE PROVIDED ON THE SITE. THE SITE WILL BE SERVICED BY PUBLIC WATER AND SEWER. APPROXIMATELY 8.55 ACRES WILL BE DISTURBED FROM THE CONSTRUCTION OF THE SITE.

THE PLAN INDICATES THE NECESSARY EROSION CONTROL FACILITIES WHICH WILL BE IMPLEMENTED DURING THE CONSTRUCTION OF THE PROJECT. THESE CONTROLS INCLUDE BUT ARE NOT LIMITED TO ROCK CONSTRUCTION ENTRANCES, SEDIMENT BASINS, SEDIMENT TRAPS, COLLECTOR SWALES, EROSION CONTROL BLANKETS, SEDIMENT FILTER SOCK AND FENCING, CONCRETE WASHOUTS AND TEMPORARY AND PERMANENT SEEDING.

THESE CONTROLS ALONG WITH THE SEQUENCE OF CONSTRUCTION MINIMIZES THE EXTENT AND DURATION OF EARTH DISTURBANCE BY REQUIRING THE ROADS BE CUT IN AND DIRECTING STORMWATER TO THE SEDIMENT BASIN BEFORE OVERALL SITE GRADING MAY COMMENCE. THE E&S DESIGN MAXIMIZES THE PROTECTION OF EXISTING DRAINAGE FEATURES AND VEGETATION BY PROTECTING THE WOODLANDS AND STEEP SLOPES, APPROXIMATELY 3.60 ACRES OF OPEN SPACE IS PROVIDED. THE E&S PLAN PREVENTS THE GENERATION OF INCREASED STORMWATER RUNOFF BY PROVIDING A SEDIMENT BASIN, FOREBAY AND SEDIMENT TRAP WHICH WILL ALLOW STORMWATER TO BE STORED AND DISCHARGED AT PRE DEVELOPMENT RATES OR BELOW. WATERSHEDS A DISCHARGES TO A PENNDOT STORM SEWER SYSTEM AT RATES LOWER THAN PRE DEVELOPMENT LEVELS, WATERSHED B & C DISCHARGES TO OFFSITE AREAS WHICH ARE NOT WATERCOURSES. IN ORDER TO ENSURE THE DISCHARGE WILL NOT CAUSE EROSION, DAMAGE OR DEGRADE ANY DOWNSLOPE AREAS THE RATES AND VOLUMES OF STORMWATER RUNOFF HAVE BEEN REDUCED TO LEVELS LOWER THAN PRE DEVELOPMENT. THE STORMWATER FLOWS ALSO LEAVE THE SITE IN SHEET FLOW, WHICH IS GENERALLY NON-EROSIVE. THIS WILL ENSURE NO DAMAGE IS DONE DOWNSLOPE OF THE PROJECT SITE. NOTES HAVE BEEN INCLUDED ON THE E&S PLANS AND THE SEQUENCE OF CONSTRUCTION TO MINIMIZE SOIL COMPACTION THROUGHOUT THE SITE, EXCEPT FOR BUILDING PAD ENVELOPES AND ROADWAYS.

THE POTENTIAL FOR THERMAL IMPACTS EXISTS FROM THE DEVELOPMENT OF THIS SITE, IN ORDER TO MITIGATE THIS VEGETATED SWALES AND LAWN AREAS ARE PROPOSED THROUGHOUT THE SITE TO INCREASE THE TRAVEL TIME OF STORMWATER AND ALLOW IT TO INFILTRATE INTO THE GROUND, REDUCING THE QUANTITY AND TEMPERATURE OF RUNOFF WHILE INCREASING THE QUALITY OF STORMWATER RUNOFF. AMENDED SOILS ARE PROPOSED IN LAWN AREAS, WHICH PROVIDES WATER QUALITY AND QUANTITY BENEFITS TO ALL STORMWATER, WHICH WILL REDUCE THE TEMPERATURE OF RUNOFF. THE EXISTING TREES AND BUFFERS, PROPOSED PLANTINGS AND PROPOSED TREES SPREAD THROUGHOUT THE SITE WILL PROVIDE SHADING THUS DECREASING THE TEMPERATURE OF RUNOFF. AN INFILTRATION BASIN, BIO-RETENTION BASIN AND FOREBAY ARE PROPOSED WITH WET TOLERANT PLANTINGS WHICH WILL ALLOW FOR INFILTRATION, IMPROVE WATER QUALITY AND DECREASE THE QUANITITY AND TEMPERATURE OF RUNOFF. ALL OF THESE MEASURES TOGETHER WILL SERVE TO MITIGATE ANY POTENTIAL INCREASE IN THERMAL IMPACTS TO THE RECEIVING WATERCOURSE FROM THE PROJECT.

SITE DATA

THE SITE IS CURRENTLY SEVERAL RESIDENTIAL DWELLINGS AND ASSOCIATED DRIVEWAYS AND OUTBUILDINGS, OVERGROWN FIELDS AND WOODLANDS AND HAS BEEN FOR THE LAST 5 YEARS. PREVIOUSLY THE SITE CONSISTED OF SEVERAL SINGLE FAMILY DWELLINGS, FARM FIELDS AND WOODLANDS FOR OVER 50 YEARS PRIOR. INFORMATION RELATIVE TO TOPOGRAPHY, SOILS, EXISTING TOPOGRAPHICAL FEATURES, UTILITIES AND GRADING ARE SHOWN ON THE ATTACHED PLANS. THE SITE DRAINS TO THREE DIFFERENT WATERSHEDS, WATERSHED A DRAINS IN A WESTERLY DIRECTION INTO A PENNDOT STORM SEWER SYTEM AND ULTIMATELY INTO GEORGE SMEDLEY RUN, A DESIGNATED AND EXISTING USE OF HQ-TSF ; MF, A HIGH QUALITY TROUT STOCKED FISHERY MIGRATORY FISH WATERSHED PER CHAPTER 93 CLASSIFICATIONS. WATERSHED B AND C DRAIN IN AN EASTERLY DIRECTION INTO A PENNDOT STORM SEWER SYSTEM, A DESIGNATED AND EXISTING USE OF HQ-TSF ; MF, A HIGH QUALITY TROUT STOCKED FISHERY MIGRATORY FISH WATERSHED PER CHAPTER 93 CLASSIFICATIONS. WATERSHED B AND C DRAIN TO THE SAME STORM SEWER SYSTEM, HOWEVER THEY ARE ANALYZED SEPARATELY AS THEY ENTER TO SYSTEM VIA DIFFERENT CATCH BASINS.

SOILS

INFORMATION PERTAINING TO SOILS OF THE TRACT ARE SHOWN ON THE ATTACHED PLANS AND WERE INTERPOLATED FROM THE NATIONAL RESOURCE CONSERVATION SERVICE SOIL SURVEY. THE FOLLOWING DESCRIPTIONS PERTAIN TO THE INDIVIDUAL SOIL TYPES FOUND IN THE CONSTRUCTION AREAS OF THE SITE: THERE ARE NO NATURALLY OCCURRING GEOLOGIC FORMATION OR SOIL CONDITIONS THAT HAVE THE POTENTIAL TO CAUSE POLLUTION.

GDB--GLADSTONE GRAVELLY LOAM, 3 TO 8 PERCENT SLOPES
MAP UNIT SETTING
NATIONAL MAP UNIT SYMBOL: 2V7GK
ELEVATION: 250 TO 1,200 FEET
MEAN ANNUAL PRECIPITATION: 30 TO 64 INCHES
MEAN ANNUAL AIR TEMPERATURE: 46 TO 79 DEGREES F
FROST-FREE PERIOD: 131 TO 178 DAYS
FARMLAND CLASSIFICATION: ALL AREAS ARE PRIME FARMLAND
MAP UNIT COMPOSITION
GLADSTONE AND SIMILAR SOILS: 85 PERCENT
MINOR COMPONENTS: 15 PERCENT
ESTIMATES ARE BASED ON OBSERVATIONS, DESCRIPTIONS, AND TRANSECTS OF THE MAPUNIT.
DESCRIPTION OF GLADSTONE
SETTING
LANDFORM: HILLS
LANDFORM POSITION (TWO-DIMENSIONAL): SHOULDER
LANDFORM POSITION (THREE-DIMENSIONAL): SIDE SLOPE
DOWN-SLOPE SHAPE: LINEAR
ACROSS-SLOPE SHAPE: CONVEX
PARENT MATERIAL: LOAMY COLLUVIUM DERIVED FROM GRANITE AND GNEISS AND/OR LOAMY RESIDUUM WEATHERED FROM GRANITE AND GNEISS
TYPICAL PROFILE
AP – 0 TO 10 INCHES: GRAVELLY LOAM
BT1 – 10 TO 22 INCHES: SANDY CLAY LOAM
BT2 – 22 TO 37 INCHES: LOAM
C – 37 TO 66 INCHES: SANDY LOAM
R – 66 TO 76 INCHES: BEDROCK
PROPERTIES AND QUALITIES
SLOPE: 3 TO 8 PERCENT
DEPTH TO RESTRICTIVE FEATURE: 60 TO 80 INCHES TO LITHIC BEDROCK
NATURAL DRAINAGE CLASS: WELL DRAINED
CAPACITY OF THE MOST LIMITING LAYER TO TRANSMIT WATER (KSAT): VERY LOW TO MODERATELY LOW (0.00 TO 0.06 IN/HR)
DEPTH TO WATER TABLE: MORE THAN 80 INCHES
FREQUENCY OF FLOODING: NONE
FREQUENCY OF PONDING: NONE
AVAILABLE WATER STORAGE IN PROFILE: MODERATE (ABOUT 8.4 INCHES)
INTERPRETIVE GROUPS
LAND CAPABILITY CLASSIFICATION (IRRIGATED): NONE SPECIFIED
LAND CAPABILITY CLASSIFICATION (NONIRRIGATED): 2E
HYDROLOGIC SOIL GROUP: B
HYDRIC SOIL RATING: NO
MINOR COMPONENTS
CALIFON
PERCENT OF MAP UNIT: 5 PERCENT
LANDFORM: FLATS
LANDFORM POSITION (TWO-DIMENSIONAL): FOOTSLOPE
LANDFORM POSITION (THREE-DIMENSIONAL): BASE SLOPE
DOWN-SLOPE SHAPE: CONCAVE
ACROSS-SLOPE SHAPE: LINEAR
HYDRIC SOIL RATING: NO
ANNANDALE
PERCENT OF MAP UNIT: 5 PERCENT
LANDFORM: HILLS
LANDFORM POSITION (TWO-DIMENSIONAL): SUMMIT
LANDFORM POSITION (THREE-DIMENSIONAL): INTERFLUVE
DOWN-SLOPE SHAPE: CONVEX
ACROSS-SLOPE SHAPE: LINEAR
HYDRIC SOIL RATING: NO
PARKER
PERCENT OF MAP UNIT: 5 PERCENT
LANDFORM: HILLS
LANDFORM POSITION (TWO-DIMENSIONAL): SHOULDER
LANDFORM POSITION (THREE-DIMENSIONAL): SIDE SLOPE
DOWN-SLOPE SHAPE: CONVEX
ACROSS-SLOPE SHAPE: LINEAR
HYDRIC SOIL RATING: NO

GDD--GLADSTONE GRAVELLY LOAM, 15 TO 25 PERCENT SLOPES
MAP UNIT SETTING
NATIONAL MAP UNIT SYMBOL: WPHJ
ELEVATION: 200 TO 1,200 FEET
MEAN ANNUAL PRECIPITATION: 40 TO 48 INCHES
MEAN ANNUAL AIR TEMPERATURE: 45 TO 55 DEGREES F
FROST-FREE PERIOD: 150 TO 190 DAYS
FARMLAND CLASSIFICATION: NOT PRIME FARMLAND
MAP UNIT COMPOSITION
GLADSTONE AND SIMILAR SOILS: 90 PERCENT
MINOR COMPONENTS: 10 PERCENT
ESTIMATES ARE BASED ON OBSERVATIONS, DESCRIPTIONS, AND TRANSECTS OF THE MAPUNIT.
DESCRIPTION OF GLADSTONE
SETTING
LANDFORM: HILLSLOPES
LANDFORM POSITION (TWO-DIMENSIONAL): SUMMIT, SHOULDER
LANDFORM POSITION (THREE-DIMENSIONAL): NOSE SLOPE, SIDE SLOPE
DOWN-SLOPE SHAPE: LINEAR, CONVEX
ACROSS-SLOPE SHAPE: LINEAR, CONVEX
PARENT MATERIAL: LOCAL COLLUVIUM AND RESIDUUM WEATHERED FROM GRANITE AND GNEISS
TYPICAL PROFILE
AP – 0 TO 10 INCHES: GRAVELLY LOAM
BT – 10 TO 42 INCHES: GRAVELLY CLAY LOAM
C – 42 TO 68 INCHES: VERY GRAVELLY LOAM
R – 68 TO 78 INCHES: BEDROCK
PROPERTIES AND QUALITIES
SLOPE: 15 TO 25 PERCENT
DEPTH TO RESTRICTIVE FEATURE: 60 TO 100 INCHES TO LITHIC BEDROCK
NATURAL DRAINAGE CLASS: WELL DRAINED
RUNOFF CLASS: MEDIUM
CAPACITY OF THE MOST LIMITING LAYER TO TRANSMIT WATER (KSAT): VERY LOW TO HIGH (0.00 TO 6.00 IN/HR)
DEPTH TO WATER TABLE: MORE THAN 80 INCHES
FREQUENCY OF FLOODING: NONE
FREQUENCY OF PONDING: NONE
AVAILABLE WATER STORAGE IN PROFILE: MODERATE (ABOUT 6.9 INCHES)
INTERPRETIVE GROUPS
LAND CAPABILITY CLASSIFICATION (IRRIGATED): NONE SPECIFIED
LAND CAPABILITY CLASSIFICATION (NONIRRIGATED): 4E
HYDROLOGIC SOIL GROUP: A
HYDRIC SOIL RATING: NO
MINOR COMPONENTS
CALIFON
PERCENT OF MAP UNIT: 5 PERCENT
LANDFORM: HILLS
LANDFORM POSITION (TWO-DIMENSIONAL): BACKSLOPE, FOOTSLOPE
LANDFORM POSITION (THREE-DIMENSIONAL): HEAD SLOPE
DOWN-SLOPE SHAPE: CONCAVE, LINEAR
ACROSS-SLOPE SHAPE: CONCAVE, LINEAR
HYDRIC SOIL RATING: NO
COKESBURY
PERCENT OF MAP UNIT: 5 PERCENT
LANDFORM: DEPRESSIONS
LANDFORM POSITION (TWO-DIMENSIONAL): TOESLOPE, FOOTSLOPE
LANDFORM POSITION (THREE-DIMENSIONAL): BASE SLOPE
DOWN-SLOPE SHAPE: CONCAVE
ACROSS-SLOPE SHAPE: CONCAVE
HYDRIC SOIL RATING: YES

UUGB--URBAN LAND-UDORTHENTS, SCHIST AND GNEISS COMPLEX, 0 TO 8 PERCENT SLOPES
MAP UNIT SETTING
NATIONAL MAP UNIT SYMBOL: PJNY
ELEVATION: 200 TO 2,000 FEET
MEAN ANNUAL PRECIPITATION: 35 TO 55 INCHES
MEAN ANNUAL AIR TEMPERATURE: 45 TO 61 DEGREES F
FROST-FREE PERIOD: 110 TO 235 DAYS
FARMLAND CLASSIFICATION: NOT PRIME FARMLAND
MAP UNIT COMPOSITION
URBAN LAND: 80 PERCENT
UDORTHENTS, SCHIST AND GNEISS, AND SIMILAR SOILS: 15 PERCENT
MINOR COMPONENTS: 5 PERCENT
ESTIMATES ARE BASED ON OBSERVATIONS, DESCRIPTIONS, AND TRANSECTS OF THE MAPUNIT.
DESCRIPTION OF URBAN LAND
SETTING
LANDFORM: HILLS
LANDFORM POSITION (TWO-DIMENSIONAL): SUMMIT, SHOULDER, BACKSLOPE
LANDFORM POSITION (THREE-DIMENSIONAL): INTERFLUVE, SIDE SLOPE, NOSE SLOPE
DOWN-SLOPE SHAPE: LINEAR, CONVEX
ACROSS-SLOPE SHAPE: CONVEX, LINEAR
PARENT MATERIAL: PAVEMENT, BUILDINGS AND OTHER ARTIFICALLY COVERED AREAS
TYPICAL PROFILE
C – 0 TO 6 INCHES: VARIABLE
PROPERTIES AND QUALITIES
SLOPE: 0 TO 8 PERCENT
DEPTH TO RESTRICTIVE FEATURE: 10 TO 99 INCHES TO LITHIC BEDROCK
AVAILABLE WATER STORAGE IN PROFILE: VERY LOW (ABOUT 0.0 INCHES)
INTERPRETIVE GROUPS
LAND CAPABILITY CLASSIFICATION (IRRIGATED): NONE SPECIFIED
LAND CAPABILITY CLASSIFICATION (NONIRRIGATED): 8S
HYDRIC SOIL RATING: NO
DESCRIPTION OF UDORTHENTS, SCHIST AND GNEISS
SETTING
LANDFORM: HILLS
LANDFORM POSITION (TWO-DIMENSIONAL): SUMMIT, SHOULDER, BACKSLOPE
LANDFORM POSITION (THREE-DIMENSIONAL): INTERFLUVE, SIDE SLOPE, NOSE SLOPE
DOWN-SLOPE SHAPE: LINEAR, CONVEX
ACROSS-SLOPE SHAPE: CONVEX, LINEAR
PARENT MATERIAL: GRADED AREAS OF SCHIST AND/OR GNEISS
TYPICAL PROFILE
AP – 0 TO 6 INCHES: LOAM
C – 6 TO 40 INCHES: SILTY CLAY LOAM
R – 40 TO 60 INCHES: BEDROCK
PROPERTIES AND QUALITIES
SLOPE: 0 TO 8 PERCENT
DEPTH TO RESTRICTIVE FEATURE: 20 TO 70 INCHES TO PARALITHIC BEDROCK
NATURAL DRAINAGE CLASS: WELL DRAINED
RUNOFF CLASS: MEDIUM
CAPACITY OF THE MOST LIMITING LAYER TO TRANSMIT WATER (KSAT): MODERATELY LOW TO MODERATELY HIGH (0.06 TO 0.20 IN/HR)
DEPTH TO WATER TABLE: ABOUT 60 INCHES
FREQUENCY OF FLOODING: NONE
FREQUENCY OF PONDING: NONE
AVAILABLE WATER STORAGE IN PROFILE: MODERATE (ABOUT 6.8 INCHES)
INTERPRETIVE GROUPS
LAND CAPABILITY CLASSIFICATION (IRRIGATED): NONE SPECIFIED
LAND CAPABILITY CLASSIFICATION (NONIRRIGATED): 7S
HYDROLOGIC SOIL GROUP: C
HYDRIC SOIL RATING: NO
MINOR COMPONENTS
GLENELG
PERCENT OF MAP UNIT: 1 PERCENT
LANDFORM: HILLSLOPES
LANDFORM POSITION (TWO-DIMENSIONAL): SUMMIT, SHOULDER, BACKSLOPE
LANDFORM POSITION (THREE-DIMENSIONAL): INTERFLUVE, SIDE SLOPE, NOSE SLOPE
DOWN-SLOPE SHAPE: LINEAR, CONVEX
ACROSS-SLOPE SHAPE: CONVEX, LINEAR
HYDRIC SOIL RATING: NO
EDGEMONT
PERCENT OF MAP UNIT: 1 PERCENT
LANDFORM: RIDGES
LANDFORM POSITION (TWO-DIMENSIONAL): SUMMIT
LANDFORM POSITION (THREE-DIMENSIONAL): MOUNTAINTOP
DOWN-SLOPE SHAPE: CONVEX, LINEAR
ACROSS-SLOPE SHAPE: LINEAR, CONVEX
HYDRIC SOIL RATING: NO
GLENVILLE
PERCENT OF MAP UNIT: 1 PERCENT
LANDFORM: HILLSLOPES
LANDFORM POSITION (TWO-DIMENSIONAL): FOOTSLOPE, BACKSLOPE
LANDFORM POSITION (THREE-DIMENSIONAL): SIDE SLOPE, HEAD SLOPE
DOWN-SLOPE SHAPE: LINEAR, CONCAVE
ACROSS-SLOPE SHAPE: CONCAVE, LINEAR
HYDRIC SOIL RATING: NO
BAILE
PERCENT OF MAP UNIT: 1 PERCENT
LANDFORM: DEPRESSIONS
LANDFORM POSITION (TWO-DIMENSIONAL): FOOTSLOPE
LANDFORM POSITION (THREE-DIMENSIONAL): BASE SLOPE
DOWN-SLOPE SHAPE: LINEAR, CONCAVE
ACROSS-SLOPE SHAPE: CONCAVE, LINEAR
HYDRIC SOIL RATING: YES
GLADSTONE
PERCENT OF MAP UNIT: 1 PERCENT
LANDFORM: HILLSLOPES
LANDFORM POSITION (TWO-DIMENSIONAL): SUMMIT, SHOULDER
LANDFORM POSITION (THREE-DIMENSIONAL): NOSE SLOPE, SIDE SLOPE
DOWN-SLOPE SHAPE: LINEAR, CONVEX
ACROSS-SLOPE SHAPE: LINEAR, CONVEX
HYDRIC SOIL RATING: NO

UUGD--URBAN LAND-UDORTHENTS, SCHIST AND GNEISS COMPLEX, 8 TO 25 PERCENT SLOPES
MAP UNIT SETTING
NATIONAL MAP UNIT SYMBOL: PJNZ
ELEVATION: 200 TO 2,000 FEET
MEAN ANNUAL PRECIPITATION: 35 TO 55 INCHES
MEAN ANNUAL AIR TEMPERATURE: 45 TO 61 DEGREES F
FROST-FREE PERIOD: 110 TO 235 DAYS
FARMLAND CLASSIFICATION: NOT PRIME FARMLAND
MAP UNIT COMPOSITION
URBAN LAND: 80 PERCENT
UDORTHENTS, SCHIST AND GNEISS, AND SIMILAR SOILS: 15 PERCENT
MINOR COMPONENTS: 5 PERCENT
ESTIMATES ARE BASED ON OBSERVATIONS, DESCRIPTIONS, AND TRANSECTS OF THE MAPUNIT.
DESCRIPTION OF URBAN LAND
SETTING
LANDFORM: HILLS
LANDFORM POSITION (TWO-DIMENSIONAL): SUMMIT, SHOULDER, BACKSLOPE
LANDFORM POSITION (THREE-DIMENSIONAL): INTERFLUVE, SIDE SLOPE, NOSE SLOPE
DOWN-SLOPE SHAPE: LINEAR, CONVEX
ACROSS-SLOPE SHAPE: CONVEX, LINEAR
PARENT MATERIAL: PAVEMENT, BUILDINGS AND OTHER ARTIFICALLY COVERED AREAS
TYPICAL PROFILE
C – 0 TO 6 INCHES: VARIABLE
PROPERTIES AND QUALITIES
SLOPE: 8 TO 25 PERCENT
DEPTH TO RESTRICTIVE FEATURE: 10 TO 99 INCHES TO LITHIC BEDROCK
AVAILABLE WATER STORAGE IN PROFILE: VERY LOW (ABOUT 0.0 INCHES)
INTERPRETIVE GROUPS
LAND CAPABILITY CLASSIFICATION (IRRIGATED): NONE SPECIFIED
LAND CAPABILITY CLASSIFICATION (NONIRRIGATED): 8S
HYDRIC SOIL RATING: NO
DESCRIPTION OF UDORTHENTS, SCHIST AND GNEISS
SETTING
LANDFORM: HILLS
LANDFORM POSITION (TWO-DIMENSIONAL): SUMMIT, SHOULDER, BACKSLOPE
LANDFORM POSITION (THREE-DIMENSIONAL): INTERFLUVE, SIDE SLOPE, NOSE SLOPE
DOWN-SLOPE SHAPE: LINEAR, CONVEX
ACROSS-SLOPE SHAPE: CONVEX, LINEAR
PARENT MATERIAL: GRADED AREAS OF SCHIST AND/OR GNEISS
TYPICAL PROFILE
AP – 0 TO 6 INCHES: LOAM
C – 6 TO 40 INCHES: SILTY CLAY LOAM
R – 40 TO 60 INCHES: BEDROCK
PROPERTIES AND QUALITIES
SLOPE: 8 TO 25 PERCENT
DEPTH TO RESTRICTIVE FEATURE: 20 TO 70 INCHES TO PARALITHIC BEDROCK
NATURAL DRAINAGE CLASS: WELL DRAINED
RUNOFF CLASS: HIGH
CAPACITY OF THE MOST LIMITING LAYER TO TRANSMIT WATER (KSAT): MODERATELY LOW TO MODERATELY HIGH (0.06 TO 0.20 IN/HR)
DEPTH TO WATER TABLE: ABOUT 60 INCHES
FREQUENCY OF FLOODING: NONE
FREQUENCY OF PONDING: NONE
AVAILABLE WATER STORAGE IN PROFILE: MODERATE (ABOUT 6.8 INCHES)
INTERPRETIVE GROUPS
LAND CAPABILITY CLASSIFICATION (IRRIGATED): NONE SPECIFIED
LAND CAPABILITY CLASSIFICATION (NONIRRIGATED): 7E
HYDROLOGIC SOIL GROUP: C
HYDRIC SOIL RATING: NO
MINOR COMPONENTS
EDGEMONT
PERCENT OF MAP UNIT: 1 PERCENT
LANDFORM: RIDGES
LANDFORM POSITION (TWO-DIMENSIONAL): SUMMIT
LANDFORM POSITION (THREE-DIMENSIONAL): MOUNTAINTOP
DOWN-SLOPE SHAPE: CONVEX, LINEAR
ACROSS-SLOPE SHAPE: LINEAR, CONVEX
HYDRIC SOIL RATING: NO
GLENVILLE
PERCENT OF MAP UNIT: 1 PERCENT
LANDFORM: HILLSLOPES
LANDFORM POSITION (TWO-DIMENSIONAL): FOOTSLOPE, BACKSLOPE
LANDFORM POSITION (THREE-DIMENSIONAL): SIDE SLOPE, HEAD SLOPE
DOWN-SLOPE SHAPE: LINEAR, CONCAVE
ACROSS-SLOPE SHAPE: CONCAVE, LINEAR
HYDRIC SOIL RATING: NO
BAILE
PERCENT OF MAP UNIT: 1 PERCENT
LANDFORM: DEPRESSIONS
LANDFORM POSITION (TWO-DIMENSIONAL): FOOTSLOPE
LANDFORM POSITION (THREE-DIMENSIONAL): BASE SLOPE
DOWN-SLOPE SHAPE: CONCAVE, LINEAR
ACROSS-SLOPE SHAPE: CONCAVE, LINEAR
HYDRIC SOIL RATING: YES
GLADSTONE
PERCENT OF MAP UNIT: 1 PERCENT
LANDFORM: HILLSLOPES
LANDFORM POSITION (TWO-DIMENSIONAL): SUMMIT, SHOULDER
LANDFORM POSITION (THREE-DIMENSIONAL): NOSE SLOPE, SIDE SLOPE
DOWN-SLOPE SHAPE: LINEAR, CONVEX
ACROSS-SLOPE SHAPE: LINEAR, CONVEX
HYDRIC SOIL RATING: NO
GLENELG
PERCENT OF MAP UNIT: 1 PERCENT
LANDFORM: HILLSLOPES
LANDFORM POSITION (TWO-DIMENSIONAL): SUMMIT, SHOULDER, BACKSLOPE
LANDFORM POSITION (THREE-DIMENSIONAL): INTERFLUVE, SIDE SLOPE, NOSE SLOPE
DOWN-SLOPE SHAPE: LINEAR, CONVEX
ACROSS-SLOPE SHAPE: CONVEX, LINEAR
HYDRIC SOIL RATING: NO

SOIL LIMITATIONS AND RESOLUTIONS

Soil Limitations																
Soil Name	Cutbanks Cave	Corrosive to Concrete/Steel	Droughty	Easily Erodible	Flooding	Depth to Saturated Zone / Seasonal High Water Table	Hydric / Hydric Inclusions	Low Strength / Landslide Prone	Slow Percolation	Piping	Poor Source of Topsoil	Frost Action	Shrink - Swell	Potential Sinkhole	Ponding	Wetness
Gladstone	x	c/s		x			x		x			x	X			
Udorthents	x	c/s	x	x				x	x		x	x				

NO.	REVISION	DATE	BY
2	REVISED PER TOWNSHIP REVIEW LETTER DATED 12/11/18	1/30/19	BG
1	REVISED PER TOWNSHIP REVIEW LETTERS DATED 9/13/18 & 10/26/18	11/5/18	BG

SEAL

NORTH

MANAGER NF	
DESIGN KK	CHKD. BY
DRAFT BG	CHKD. BY
FILE ROU-01	DATE 8/9/2018
NOTES	SCALE NTS

BURSICH
Sharing your Vision

Corporate Headquarters
2129 East High Street
Pottstown, PA 19464
610-323-4040

Southampton Office
706 Lakeside Drive
Southampton, PA 18966

w w w . b u r s i c h . c o m

CLIENT
ROUSE/CHAMBERLIN, LTD
500 EXTON COMMONS
EXTON, PA 19341

SUBJECT
EROSION & SEDIMENT CONTROL DETAILS/NOTES

PRESERVE AT WILLISTOWN

WILLISTOWN TOWNSHIP, CHESTER COUNTY, PENNSYLVANIA

JOB NO. 187872
SHEET NO. 5 OF 6
DWG. NO. ES587872

P:\ROU-01\187872-00\dwg\LD_Plan\ES187872.dwg

© COPYRIGHT BURSICH ASSOCIATES, INC. 2018
ALL REPORTS, DOCUMENTS, SPECIFICATIONS, COMPUTER FILES, FIELD DATA, NOTES AND OTHER DOCUMENTS AND INSTRUMENTS PREPARED BY BURSICH ASSOCIATES, INC. AS INSTRUMENTS OF SERVICE SHALL REMAIN THE PROPERTY OF BURSICH ASSOCIATES, INC. AND THEREFORE SHALL RETAIN ALL COMMON LAW, STATUTORY AND OTHER RESERVED RIGHTS, INCLUDING THE COPYRIGHT THERETO. ANY USE, REUSE OR MODIFICATION/ALTERATION AND REPRODUCTION WITHOUT THE EXPRESS WRITTEN CONSENT OF BURSICH ASSOCIATES, INC. IS STRICTLY PROHIBITED. ANY USE, REUSE OR MODIFICATION/ALTERATION BY ANYONE WITHOUT WRITTEN CONSENT SHALL BE DEEMED AN AGREEMENT BETWEEN THE USER AND BURSICH ASSOCIATES, INC. WHICH SHALL INDEMNIFY AND SAVE HARMLESS BURSICH ASSOCIATES, INC. FOR ALL CLAIMS, DAMAGES, LOSSES AND EXPENSES ARISING FROM THE USE THEREFROM.

SOIL LIMITATIONS AND RESOLUTIONS

CUTBANKS CAVE – SLOPE LAY-BACKS OR SHORE/TRENCH BOX SHALL BE UTILIZED FOR ALL TRENCH EXCAVATIONS TO MEET OSHA REGULATIONS.

CORROSIVE TO CONCRETE STEEL – PIPE ALTERNATIVES HAVE BEEN PROVIDED.

DROUGHTY – SEEDING AND SOIL SUPPLEMENTS SHALL BE APPLIED AT THE RECOMMENDED RATES TO ENSURE PROPER VEGETATIVE COVER, MULCHING SHALL ALSO BE APPLIED AT THE RECOMMENDED RATES TO RETAIN MOISTURE.

EASILY ERODIBLE – ROLLED EROSION CONTROL PRODUCTS SHALL BE PROVIDED ON ALL SEEDED AND MULCHED SLOPES 3H: 1V OR STEEPER.

DEPTH TO SATURATED ZONE/ SEASONAL HIGH WATER TABLE – PUMPED WATER FILTER BAGS SHALL BE USED TO DEWATER EXCAVATION AREAS WHERE STANDING WATER OCCURS DURING CONSTRUCTION.

HYDRIC / HYDRIC INCLUSIONS – WETLANDS, IF PRESENT, HAVE BEEN IDENTIFIED, PROTECTED AND/OR MITIGATED WHERE NECESSARY.

LOW STRENGTH / LANDSLIDE PRONE – ALL SLOPES (CUT OR FILL) SHALL BE CONSTRUCTED IN ACCORDANCE WITH THE SPECIFICATIONS; GEOTECHNICAL ANALYSIS HAS BEEN PERFORMED IF DEEMED NECESSARY.

SLOW PERCOLATION – INFILTRATION TESTING HAS BEEN PERFORMED AS INFILTRATION BMP LOCATIONS.

PIPING – ANTI-SEEP COLLARS HAVE BEEN PROVIDED FOR THE BASIN OUTLET TO PREVENT EMBANKMENT FAILURE.

POOR SOURCE OF TOPSOIL – TOPSOIL SHALL BE APPLIED AT THE RECOMMENDED RATE. IF THE PROJECT SITE DOES NOT MEET THE REQUIRED AMOUNT, TOPSOIL SHALL BE SUPPLIED FROM AN OUTSIDE SOURCE, SEEDING AND SOIL SUPPLEMENTS SHALL BE APPLIED AT THE RECOMMENDED RATES TO ENSURE PROPER VEGETATIVE COVER.

FROST ACTION – ROADWAY SUBBASE SHALL DRAIN TO A SLOPE OR SHALL BE DRAINED WITH PAVEMENT BASE DRAIN, ALSO, THE BULK OF CONSTRUCTION ACTIVITIES SHALL BE PERFORMED DURING THE CONSTRUCTION SEASON.

WETNESS – PUMPED WATER FILTER BAGS SHALL BE USED TO DEWATER EXCAVATION AREAS WHERE STANDING WATER OCCURS DURING CONSTRUCTION.

PROPOSED GRADING

THE ATTACHED SOIL EROSION CONTROL PLANS INDICATE THE PROPOSED GRADING FOR THE ENTIRE SITE TO BE DEVELOPED. ALL PERMANENT GRADING SHALL BE GRADED AT SLOPES NOT STEEPER THAN 3 FOOT HORIZONTAL TO 1 FOOT VERTICAL. TEMPORARY GRADING CAN BE GRADED AT SLOPES NOT STEEPER THAN 2 FOOT HORIZONTAL TO 1 FOOT VERTICAL.

HYDROLOGIC INFORMATION

THE DESIGN OF THE FACILITIES WITHIN THIS DEVELOPMENT ARE CONSISTENT WITH THE TOWNSHIP'S AND DEP'S REQUIREMENTS FOR STORM DRAINAGE DESIGN, WHICH MITIGATE ANY INCREASE IN STORMWATER RATE OR VOLUME, ULTIMATELY RESULTING IN NO NEGATIVE IMPACTS TO THE DOWNSTREAM WATERCOURSES.

STABILIZATION

THE DEVELOPMENT WILL BE CONSIDERED TO BE PERMANENTLY STABILIZED WHEN ALL PERMANENT CONTROL MEASURES/FACILITIES HAVE BEEN COMPLETED AND ARE OPERATIONAL, TEMPORARY CONTROL MEASURES/FACILITIES REMOVED, AND UNIFORM EROSION RESISTANT PERENNIAL VEGETATION IS ESTABLISHED TO THE POINT WHERE THE SURFACE SOIL IS CAPABLE OF RESISTING EROSION DURING RUNOFF EVENTS. THE STANDARD FOR THIS VEGETATIVE COVER WILL BE UNIFORM COVERAGE OR DENSITY OF 70 PERCENT ACROSS THE DISTURBED AREA.

GENERAL EROSION CONTROL NOTES

1. EROSION AND SEDIMENT CONTROL MEASURES MUST BE IN COMPLIANCE WITH THE "EROSION AND SEDIMENT POLLUTION CONTROL PROGRAM MANUAL". THE DEVELOPER OR ITS AUTHORIZED REPRESENTATIVE WILL BE RESPONSIBLE FOR THE PROPER CONSTRUCTION, STABILIZATION AND MAINTENANCE OF ALL EROSION AND SEDIMENTATION CONTROLS AND RELATED ITEMS INCLUDED WITHIN THE EROSION AND SEDIMENTATION CONTROL PLAN. THE CONTRACTOR IS ADVISED TO BECOME THOROUGHLY FAMILIAR WITH THE PROVISIONS OF APPENDIX B-4, EROSION CONTROL RULES AND REGULATIONS, TITLE 24, PART 1, DEPARTMENT OF ENVIRONMENTAL RESOURCES, SUBPART C, WATER RESOURCES, CHAPTER 102, EROSION CONTROL.

2. THE CONTRACTOR SHALL NOTIFY THE TOWNSHIP ENGINEER AT LEAST 48 HOURS PRIOR TO THE START OF CONSTRUCTION.

3. A COPY OF THE APPROVED EROSION AND SEDIMENT CONTROL PLAN MUST BE AVAILABLE AT THE PROJECT SITE AT ALL TIMES. ADDITIONALLY, THE OPERATOR SHALL ASSURE THAT EROSION AND SEDIMENT CONTROL PLAN HAS BEEN PREPARED, AND HAS BEEN APPROVED BY THE CHESTER COUNTY CONSERVATION DISTRICT AND/OR LOCAL MUNICIPALITY IN COMPLIANCE WITH CHAPTER 102 RULES & REGULATIONS, AND IS BEING IMPLEMENTED AND MAINTAINED FOR ALL OFFSITE SOIL AND/OR ROCK SPOIL AND/OR BORROW AREAS.

4. BEFORE GRADING OR GENERAL SITE CONSTRUCTION BEGINS, THE DEVELOPER OR ITS AUTHORIZED REPRESENTATIVE IS TO CONSTRUCT AND COMPLETE SEDIMENT CONTROL MEASURES AND DEVICES AS SHOWN ON THE EROSION AND SEDIMENT CONTROL PLANS.

5. SHOULD ADDITIONAL EROSION OR SEDIMENTATION OCCUR DURING CONSTRUCTION OR SHOULD QUESTIONS REGARDING THE MAINTENANCE OF CONTROL PRACTICES ARISE, CONTACT THE CHESTER COUNTY CONSERVATION DISTRICT OR APPROPRIATE AGENCY IMMEDIATELY FOR TECHNICAL SUPPORT.

   SHOULD ANY MEASURES CONTAINED WITHIN THIS PLAN PROVE INCAPABLE OF ADEQUATELY REMOVING SEDIMENT FROM ON-SITE FLOWS PRIOR TO DISCHARGE OR OF STABILIZING THE SURFACES INVOLVED, ADDITIONAL MEASURES MUST BE IMMEDIATELY IMPLEMENTED BY THE DEVELOPER OF ITS AUTHORIZED REPRESENTATIVE TO ELIMINATE ALL SUCH PROBLEMS. THE CONSERVATION DISTRICT MUST BE NOTIFIED OF ANY ADDITIONAL MEASURES TAKEN TO ABATE THE POLLUTION OF WATERS OF THE COMMONWEALTH NOT SHOWN ON THE PLANS. STOCKPILES OF WOOD CHIPS, HAY BALES, CRUSHED STONE AND OTHER MULCHES SHALL BE HELD IN READINESS TO DEAL IMMEDIATELY WITH EMERGENCY PROBLEMS WITH EROSION.

   THE TOWNSHIP HAS REVIEWED THE STORM DRAINAGE SYSTEM, THE STORM WATER MANAGEMENT SYSTEM AND THE EROSION AND SEDIMENTATION CONTROL PLAN; HOWEVER, SITE CONDITIONS MAY DICTATE THAT DURING CONSTRUCTION ADDITIONAL SILT FENCES, OTHER METHODS OF SEDIMENT CONTROL, STORM WATER MANAGEMENT OR STORM DRAINAGE MEASURES MAY BE REQUIRED. THE TOWNSHIP MAY, THEREFORE, DIRECT THE INSTALLATION OF ADDITIONAL MEASURES AS REQUIRED.

6. THE DEVELOPER OR ITS AUTHORIZED REPRESENTATIVE MUST DEVELOP AND HAVE APPROVED BY THE BUREAU OF SOIL AND WATER CONSERVATION, A SEPARATE EROSION AND SEDIMENTATION CONTROL PLAN FOR EACH SPOIL, BORROW OR OTHER WORK AREA NOT DETAILED IN THE APPROVED PLAN WHETHER LOCATED WITHIN OR OUTSIDE OF THE CONSTRUCTION LIMITS.

7. THE DEVELOPER OR ITS AUTHORIZED REPRESENTATIVE SHALL BE RESPONSIBLE FOR SUPERVISING DEBRIS DISPOSAL FROM OTHER TRADES DURING ALL PHASES OF CONSTRUCTION. DEBRIS SHALL NOT BE DISPOSED OF IN ANY WOODLAND AREAS OR DETENTION BASINS. THE DEVELOPER OR ITS AUTHORIZED REPRESENTATIVE SHALL BEAR THE EXPENSE OF ANY CLEAN-UP OPERATIONS INITIATED BY THE ENGINEER OR OWNER.

8. THE STONE SUBBASE FOR PARKING AREAS, ROADS AND DRIVEWAYS SHALL BE INSTALLED IMMEDIATELY AFTER GRADING IS COMPLETED AND UTILITIES ARE INSTALLED.

9. LOCATE EROSION AND SEDIMENT CONTROL STRUCTURES IN A MANNER THAT WILL CAUSE MINIMAL DISTURBANCE TO EXISTING VEGETATION.

10. THE DEVELOPER OR ITS AUTHORIZED REPRESENTATIVE IS RESPONSIBLE FOR THE CONTINUED INSPECTION, MAINTENANCE OR REPAIR OF ALL EROSION AND SEDIMENT PROBLEMS THAT MIGHT OCCUR DUE TO THE DEVELOPMENT OF THIS PROJECT, UNTIL THE SITE IS COMPLETELY STABILIZED.

11. THE DEVELOPER OR ITS AUTHORIZED REPRESENTATIVE SHALL INSTALL SILT SOCKS OR TEMPORARY DIVERSION BERMS UPSLOPE OF ALL WATERCOURSES AS REQUIRED TO PREVENT SEDIMENT FROM ENTERING THE WATERCOURSES DURING CONSTRUCTION.

12. AN AREA SHALL BE CONSIDERED TO HAVE ACHIEVED FINAL STABILIZATION WHEN IT HAS A MINIMUM UNIFORM 70% PERENNIAL VEGETATIVE COVER OR OTHER PERMANENT NON-VEGETATIVE COVER WITH A DENSITY SUFFICIENT TO RESIST ACCELERATED SURFACE EROSION AND SUBSURFACE CHARACTERISTICS SUFFICIENT TO RESIST SLIDING AND OTHER MOVEMENTS. IMMEDIATELY AFTER EARTH DISTURBANCE ACTIVITIES CEASE, THE OPERATOR SHALL STABILIZE ANY AREAS DISTURBED BY THE ACTIVITIES. DURING NON-GERMINATING PERIODS, MULCH MUST BE APPLIED AT THE SPECIFIED RATES. DISTURBED AREAS WHICH ARE NOT AT FINISHED GRADE AND WHICH WILL BE RE-DISTURBED WITHIN 1 YEAR MUST BE STABILIZED IN ACCORDANCE WITH THE TEMPORARY VEGETATIVE STABILIZATION SPECIFICATIONS. DISTURBED AREAS WHICH ARE AT FINISHED GRADE OR WHICH WILL NOT BE RE-DISTURBED WITHIN 1 YEAR MUST BE STABILIZED IN ACCORDANCE WITH THE PERMANENT VEGETATIVE STABILIZATION SPECIFICATIONS.

    HAY OR STRAW MULCH MUST BE APPLIED AT 3.0 TONS PER ACRE.

13. WINTER GRADING SHALL BE HANDLED WITH SPECIAL CARE. DETENTION BASINS, SEDIMENT BASINS AND TRAPS CONSTRUCTED FROM SOILS WITH POOR WINTER GRADING CHARACTERISTICS SHALL NOT BE COMPACTED IF FROZEN OR WET (PLASTIC). THESE SOILS SHOULD BE RELATIVELY DRY TO MAXIMIZE COMPACTION.

    BORROW AREAS USED FOR SEDIMENT BASIN AND TRAP CONSTRUCTION SHALL HAVE SILT FENCE PLACED BELOW IT (PRIOR TO GRADING) AND SHALL BE STABILIZED IMMEDIATELY.

14. SHOULD ANY MEASURES CONTAINED WITHIN THIS PLAN PROVE INCAPABLE OF ADEQUATELY REMOVING SEDIMENT FROM ON-SITE FLOWS PRIOR TO DISCHARGE OR OF STABILIZING THE SURFACES INVOLVED, ADDITIONAL MEASURES MUST BE IMMEDIATELY IMPLEMENTED BY THE DEVELOPER TO ELIMINATE ALL SUCH PROBLEMS.

15. MAINTENANCE MUST INCLUDE INSPECTIONS OF ALL EROSION AND SEDIMENTATION CONTROLS AFTER EACH RUNOFF EVENT AND ON A WEEKLY BASIS. ALL PREVENTATIVE AND REMEDIAL MAINTENANCE WORK, INCLUDING CLEAN OUT, REPAIR, REPLACEMENT, REGRADING, RESEEDING, REMULCHING AND RENETTING MUST BE PERFORMED IMMEDIATELY. AN EXTRA SUPPLY OF STONE, SEED, MULCH AND SILT FENCE SHALL BE KEPT ON SITE FOR EMERGENCY PURPOSES. (SEE THE MAINTENANCE SECTION OF THE REPORT).

16. THE OPERATOR SHALL REMOVE FROM THE SITE, RECYCLE, OR PROPERLY DISPOSE OF ALL BUILDING MATERIAL AND WASTES IN ACCORDANCE WITH THE DEPARTMENT'S SOLID WASTE MANAGEMENT REGULATIONS AT 25 PA. CODE 260.1 ET SEQ., 271.1 ET SEQ., AND 287.1 ET SEQ. THE CONTRACTOR SHALL NOT BURY, DUMP, OR DISCHARGE ANY BUILDING MATERIAL WASTES AT THE SITE. ANTICIPATED CONSTRUCTION WASTES INCLUDE EXCESS SOILS MATERIALS, BUILDING MATERIALS, CONCRETE WASH WATER, SANITARY WASTES AND ANY MATERIAL THAT COULD IMPACT WATER QUALITY.

17. ALL SLOPES STEEPER THAN 3:1 SHALL BE LINED WITH CURLEX OR EQUAL.

18. UPON REQUEST, THE PERMIT HOLDER AND/OR HIS CONTRACTOR SHALL PROVIDE AN AS-BUILT FOR ANY SEDIMENT BASIN OR TRAP TO THE MUNICIPAL INSPECTOR, LOCAL CONSERVATION DISTRICT OR DEP.

19. UNTIL THE SITE IS STABILIZED, ALL EROSION AND SEDIMENTATION BMP'S MUST BE MAINTAINED PROPERLY. MAINTENANCE MUST INCLUDE INSPECTIONS OF ALL EROSION AND SEDIMENTATION BMP'S AFTER EACH RUNOFF EVENT AND ON A WEEKLY BASIS. ALL SITE INSPECTIONS WILL BE DOCUMENTED IN AN INSPECTION LOG KEPT FOR THIS PURPOSE, UTILIZE DEP FORM 3150-FM-BWEW0083, DATED 2/2012 OR LATEST VERSION. THE COMPLIANCE ACTIONS AND DATE, TIME AND NAME OF THE PERSON CONDUCTING THE INSPECTION. THE INSPECTION LOG WILL BE KEPT ON SITE AT ALL TIMES AND MADE AVAILABLE TO THE DISTRICT UPON REQUEST.

    ALL PREVENTATIVE AND REMEDIAL MAINTENANCE WORK, INCLUDING CLEAN OUT, REPAIR, REPLACEMENT, REGRADING, RESEEDING, REMULCHING AND RENETTING, MUST BE PERFORMED IMMEDIATELY. IF EROSION AND SEDIMENTATION BMP'S FAIL TO PERFORM AS EXPECTED, REPLACEMENT BMP'S OR MODIFICATIONS OF THOSE INSTALLED WILL BE NEEDED.

    WHERE BMP'S ARE FOUND TO FAIL TO ALLEVIATE EROSION OR SEDIMENT POLLUTION, THE PERMITTEE OR CO-PERMITTEE SHALL INCLUDE THE FOLLOWING INFORMATION.
    a. THE LOCATION AND SEVERITY OF THE BMP'S FAILURE AND ANY POLLUTION EVENTS.
    b. ALL STEPS TAKE TO, REDUCE, ELIMINATE AND PREVENT THE RECURRENCE OF THE NON-COMPLIANCE.
    c. THE TIME FRAME TO CORRECT THE NON-COMPLIANCE, INCLUDING THE EXACT DATES WHEN THE ACTIVITY WILL RETURN TO COMPLIANCE.

    AFTER FINAL SITE STABILIZATION HAS BEEN ACHIEVED, TEMPORARY EROSION AND SEDIMENT BMP'S MUST BE REMOVED. AREAS DISTURBED DURING REMOVAL OF THE BMP'S MUST BE STABILIZED IMMEDIATELY.

20. BEFORE INITIATING ANY REVISION TO THE APPROVED EROSION AND SEDIMENT CONTROL PLAN OR REVISIONS TO OTHER PLANS WHICH MAY AFFECT THE EFFECTIVENESS OF THE APPROVED E&S CONTROL PLAN, THE OPERATOR MUST RECEIVE APPROVAL OF THE REVISIONS FROM THE CHESTER COUNTY CONSERVATION DISTRICT. THE OPERATOR SHALL ASSURE THAT THE APPROVED EROSION AND SEDIMENT CONTROL PLAN IS PROPERLY AND COMPLETELY IMPLEMENTED. IMMEDIATELY UPON DISCOVERING UNFORESEEN CIRCUMSTANCES POSING THE POTENTIAL FOR ACCELERATED EROSION AND/OR SEDIMENT POLLUTION, THE OPERATOR SHALL IMPLEMENT APPROPRIATE BEST MANAGEMENT PRACTICES TO ELIMINATE POTENTIAL FOR ACCELERATED EROSION AND/OR SEDIMENT POLLUTION.

21. ALL PUMPING OF SEDIMENT LADEN WATER OR POTENTIALLY SEDIMENT LADEN WATER SHALL BE THROUGH A SEDIMENT CONTROL BMP, SUCH AS A PUMPED WATER FILTER BAG DISCHARGING OVER NON-DISTURBED AREAS.

22. UPON COMPLETION OR TEMPORARY CESSATION OF THE EARTH DISTURBANCE ACTIVITIY THAT WILL EXCEED 4 DAYS, OR ANY STAGE THEREOF, THE PROJECT SITE SHALL BE IMMEDIATELY STABILIZED WITH THE APPROPRIATE TEMPORARY OR PERMANENT STABILIZATION. HYDROSEEDING IS NOT CONSIDERED STABILIZATION UNTIL IT GERMINATES.

23. AREAS WHICH ARE TO BE TOPSOILED SHALL BE SCARIFIED TO A MINIMUM DEPTH OF 3 TO 5 INCHES (6 TO 12 INCHES ON COMPACTED SOILS) PRIOR TO PLACEMENT OF TOPSOIL. AREAS TO BE VEGETATED SHALL HAVE A MINIMUM OF 4 INCHES OF TOPSOIL IN PLACE PRIOR TO SEEDING AND MULCHING.

24. ALL SEDIMENT DEPOSITED ON PAVED ROADWAYS SHALL BE REMOVED AND RETURNED TO THE CONSTRUCTION SITE IMMEDIATELY. IF EXCESSIVE AMOUNTS OF SEDIMENT ARE BEING DEPOSITED ON THE ROADWAY, EXTEND LENGTH OF ROCK CONSTRUCTION ENTRANCE BY 50 FOOT INCREMENTS UNTIL CONDITION IS ALLEVIATED OR INSTALL WASH RACK. WASHING THE ROADWAY OR SWEEPING THE DEPOSITS INTO ROADWAY DITCHES, SEWERS, CULVERTS, OR OTHER DRAINAGE COURSES IS NOT ACCEPTABLE.

25. SEEPS OR SPRINGS ENCOUNTERED DURING CONSTRUCTION SHALL BE HANDLED IN ACCORDANCE WITH THE STANDARD AND SPECIFICATION FOR SUBSURFACE DRAIN OR OTHER APPROVED METHOD.

SEQUENCE OF CONSTRUCTION

PRIOR TO ANY WORK THE CONTRACTOR AND/OR DEVELOPER SHALL NOTIFY THE CHESTER COUNTY CONSERVATION DISTRICT OF THE DATE OF THE PRE-CONSTRUCTION MEETING. THE TOWNSHIP SHALL ALSO BE NOTIFIED SO THAT THE FIELD DELINEATED LIMIT OF CLEARING CAN BE VERIFIED.

THE DEVELOPER AND/OR CONTRACTOR SHALL NOTIFY THE CHESTER COUNTY CONSERVATION DISTRICT AT LEAST THREE (3) DAYS PRIOR TO THE COMMENCEMENT OF EARTHMOVING ACTIVITIES, AND SETUP A PRECONSTRUCTION MEETING WITH REPRESENTATIVES OF, BUT NOT LIMITED TO THE COUNTY CONSERVATION DISTRICT, MUNICIPALITY, CONTRACTOR, DEVELOPER AND THE DESIGNATED LICENSED PROFESSIONAL WHO WILL OVERSEE THE CRITICAL STAGES OF CONSTRUCTION.

THE DEVELOPER AND/OR CONTRACTOR SHALL NOTIFY THE CHESTER COUNTY CONSERVATION DISTRICT FOR A SITE INSPECTION PRIOR TO REMOVAL/CONVERSION OF A SEDIMENT TRAP OR BASIN.

CHESTER COUNTY CONSERVATION DISTRICT
688 UNIONVILLE ROAD, SUITE 200
KENNETT SQUARE, PA 19348
610.925.4920

ALL EARTH DISTURBANCE ACTIVITIES SHALL PROCEED IN ACCORDANCE WITH THE FOLLOWING SEQUENCE. EACH STAGE MUST BE COMPLETED PRIOR TO INITIATION OF FOLLOWING STAGES EXCEPT AS NOTED IN THE SEQUENCE OF CONSTRUCTION. CLEARING AND GRUBBING IS CONSIDERED GROUND DISTURBANCE AND SHALL ONLY OCCUR IN AREAS DESCRIBED IN EACH STAGE.

STORWMATER FACILITIES SHALL NOT BE CONVERTED UNTIL UPSTREAM TRIBUTARY AREA HAS BEEN STABILIZED. SEE RECHARGE AREA CONSTRUCTION SECTION OF THIS REPORT.

EXTREME CARE SHOULD BE TAKEN TO AVOID COMPACTION IN PROPOSED STORMWATER FACILITIES.

UPON COMPLETION OR TEMPORARY CESSATION OF THE EARTH DISTURBANCE ACTIVITY THAT WILL EXCEED 4 DAYS, OR ANY STAGE THEREOF, THE PROJECT SITE SHALL BE IMMEDIATELY STABILIZED WITH THE APPROPRIATE TEMPORARY OR PERMANENT STABILIZATION. HYDROSEEDING IS NOT CONSIDERED STABILIZATION UNTIL IT GERMINATES.

THE PROJECT WILL BE CONSTRUCTED IN TWO PHASES. THE FIRST PHASE INCLUDES THE DEMOLITION OF THE EXISTING HOMES, DRIVEWAYS, AND OTHER IMPROVEMENTS. THE SECOND PHASE INCLUDES THE CONSTRUCTION OF THE PROPOSED ROADS, BASINS, HOMES AND OTHER IMPROVEMENTS.

PHASE 1 – DEMOLITION OF EXISTING IMPROVEMENTS

1. AFTER THE PRE-CONSTRUCTION MEETING, INSTALL ROCK CONSTRUCTION ENTRANCES ON THE EXISTING DRIVEWAY AND ROAD A AS SHOWN ON THE PLANS. CONSTRUCTION ACCESS FOR CONSTRUCTION OF THE SEDIMENT FACILITIES AND OTHER SITE WORK SHOULD ONLY USE THIS ACCESS.

2. STAKE OUT LIMITS OF DISTURBANCE AND TREE PROTECTION FENCE PRIOR TO ANY CLEARING OR OTHER SITE DISTURBANCE AS SHOWN ON THE PLANS.

3. INSTALL SILT SOCKS AS SHOWN ON THE PLANS. CLEARING AND GRUBBING SHALL ONLY OCCUR IN AREAS NECESSARY TO INSTALL PERIMETER CONTROLS UNTIL CONTROLS ARE INSTALLED AND FUNCTIONING. IMMEDIATELY TEMPORARILY STABILIZE ALL DISTURBED AREAS THAT WILL NOT BE RE-DISTURBED WITHIN 4 DAYS. SILT SOCKS MUST BE MAINTAINED THROUGHOUT THE SITE UNTIL ALL AREAS TRIBUTARY TO THE SILT SOCK ARE PERMANENTLY STABILIZED PER THE STABILIZATION CRITERIA OUTLINED IN THIS PLAN.

4. ONCE STEPS 1-3 ARE COMPLETED AND FUNCTIONING PROPERLY, BEGIN REMOVAL OF EXISTING DWELLINGS, GARAGES, SHEDS, DRIVEWAYS, FENCES AND OTHER IMPROVEMENTS TO BE REMOVED AS DESIGNATED ON THE DEMOLITION PLAN.

5. TEMPORARILY STABILIZE ANY DISTURBED AREAS WHICH WILL NOT BE RE-DISTURBED WITHIN 4 DAYS FOLLOWING THE TEMPORARY SEEDING SPECIFICATIONS.

PHASE 2 – CONSTRUCTION OF PROPOSED IMPROVEMENTS

1. AFTER THE PRE-CONSTRUCTION MEETING, INSTALL ROCK CONSTRUCTION ENTRANCES ON ROAD A AS SHOWN ON THE PLANS. CONSTRUCTION ACCESS FOR CONSTRUCTION OF THE SEDIMENT FACILITIES AND OTHER SITE WORK SHOULD ONLY USE THESE ACCESSES.

2. STAKE OUT LIMITS OF DISTURBANCE AND TREE PROTECTION FENCE PRIOR TO ANY CLEARING OR OTHER SITE DISTURBANCE AS SHOWN ON THE PLANS.

3. INSTALL SILT SOCKS AS SHOWN ON THE PLANS. CLEARING AND GRUBBING SHALL ONLY OCCUR IN AREAS NECESSARY TO INSTALL PERIMETER CONTROLS UNTIL CONTROLS ARE INSTALLED AND FUNCTIONING. INSTALL CONCRETE WASHOUT AREA AS SHOWN ON THE PLANS. IMMEDIATELY TEMPORARILY STABILIZE ALL DISTURBED AREAS THAT WILL NOT BE RE-DISTURBED WITHIN 4 DAYS. SILT SOCKS MUST BE MAINTAINED THROUGHOUT THE SITE UNTIL ALL AREAS TRIBUTARY TO THE SILT SOCK ARE PERMANENTLY STABILIZED PER THE STABILIZATION CRITERIA OUTLINED IN THIS PLAN.

4. AFTER STEPS 1-3 ARE COMPLETED AND FUNCTIONING PROPERLY, BEGIN CLEARING AND GRUBBING AREAS NECESSARY FOR CONSTRUCTION OF THE PROPOSED SEDIMENT BASIN A. PROGRESSIVE CLEARING AND GRUBBING IN THE REMAINDER OF THE SITE MAY BE COMPLETED AS LONG AS THE INSTALLATION OF BMPS KEEPS PACE WITH THE CLEARING AND GRUBBING. IMMEDIATELY TEMPORARILY STABILIZE ALL DISTURBED AREAS THAT WILL NOT BE RE-DISTURBED WITHIN 4 DAYS.

NO EARTH DISTURBANCE BEYOND THE AREAS NECESSARY TO INSTALL SEDIMENT BASIN A SHALL COMMENCE UNTIL THE SEDIMENT BASINS ARE INSTALLED, STABILIZED AND FUNCTIONING PROPERLY, PROGRESSIVE CLEARING AND GRUBBING ON THE SITE MAY BE COMPLETED AS LONG AS THE INSTALLATION OF BMPS KEEPS PACE WITH THE CLEARING AND GRUBBING. UPON INSTALLATION OF THE SEDIMENT BASIN, AN IMMEDIATE INSPECTION SHALL BE CONDUCTED BY A QUALIFIED SITE REPRESENTATIVE AND WRITTEN NOTIFICATION SHALL BE PROVIDED TO CHESTER COUNTY CONSERVATION DISTRICT THAT THE BASIN HAS BEEN INSTALLED PER PLAN.

UPON COMPLETION OR TEMPORARY CESSATION OF THE EARTH DISTURBANCE ACTIVITY THAT WILL EXCEED 4 DAYS, OR ANY STAGE THEREOF, THE PROJECT SITE SHALL BE IMMEDIATELY STABILIZED WITH THE APPROPRIATE TEMPORARY OR PERMANENT STABILIZATION. NO MORE THAN 15,000 SQUARE FEET OF DISTURBED AREA AT FINAL GRADE SHOULD BE LEFT WITHOUT SEEDING AND MULCHING.

5. AFTER COMPLETION OF STEPS 1-4, BEGIN CONSTRUCTING SEDIMENT BASIN A AND FOREBAY A USING THE FOLLOWING PROCEDURE: **THIS IS A CRITICAL STAGE OF THE PCSM PLAN AND NEEDS A LICENSED PROFESSIONAL ONSITE DURING CONSTRUCTION.** IF CUT/FILL DOES NOT BALANCE FOR INSTALLATION OF THE SEDIMENT BASIN, CONTRACTOR SHALL OBTAIN OR PLACE FILL IN THE BASIN FILL AREA SHOWN ON THE E&S PLANS TO ENSURE ANY EROSION OF THESE AREAS IS CAPTURED BY THE SEDIMENT BASIN. IMMEDIATELY TEMPORARILY STABILIZE ALL DISTURBED AREAS THAT WILL NOT BE RE-DISTURBED WITHIN 4 DAYS.
   a. CLEAR AND GRUB BASIN AREA, STRIP TOPSOIL AND STOCKPILE AT ONE OF THE DESIGNATED STOCKPILE LOCATIONS.
   b. EXCAVATE BASIN AND PLACE COMPACTED EMBANKMENT FILL, INSTALL BASIN OUTLET PIPE, CONCRETE CRADLE AND ANTI-SEEP COLLARS, RISERS, SKIMMER, TRASH RACKS, SEDIMENT FOREBAY'S AND EMERGENCY SPILLWAY.
   c. INSTALL CLEANOUT STAKES AND MARK THE CLEANOUT ELEVATION ON THE STAKES.
   d. SPREAD TOPSOIL ON THE BASIN BERM AND IMMEDIATELY PERMANENTLY SEED AND MATT THE OUTSIDE SLOPES, TOP OF BERM AND INSIDE SLOPES ABOVE THE CLEANOUT ELEVATION. IMMEDIATELY STABILIZE ALL DISTURBED AREAS.

6. AFTER STEPS 1 THROUGH 5 HAVE BEEN COMPLETED AND ALL CONTROLS ARE FUNCTIONING PROPERLY, BEGIN CLEARING, GRUBBING AND INSTALLING TEMPORARY DIVERSION SWALE 5, TEMPORARY PIPE 1 AND WATERBAR 1. IMMEDIATELY PERMANENTLY STABILIZE SWALE PER CHANNEL LINING SPECIFICATIONS AND STABILIZE ALL DISTURBED AREAS THAT WILL NOT BE RE-DISTURBED WITHIN 4 DAYS. TEMPORARILY STABILIZE ALL DISTURBED AREAS THAT WILL NOT BE RE-DISTURBED IN THE NEXT FOUR DAYS. TEMPORARY SWALE 5 AND TEMPORARY PIPE 1 MUST REMAIN IN PLACE UNTIL THE ROAD IS COLLECTING STORMWATER AND DIRECTING IT TO THE SEDIMENT BASIN, OR AS SOON AS THE DRAINAGE AREA TO THE SWALE IS CUT OFF BY THE ROADWAY OR OTHER MEASURES.

7. AFTER STEPS 1-6 ARE INSTALLED AND FUNCTIONING PROPERLY, CLEAR, GRUB AND ROUGH GRADE AREAS NECESSARY FOR CONSTRUCTION OF THE ACCESS ROADS IN THE DEVELOPMENT. STRIP AND STOCKPILE TOPSOIL IN AREA INDICATED ON THE PLAN OR AT OTHER FIELD ACCEPTABLE LOCATIONS SUCH AS ADJACENT PHASES AS MAY BE REQUIRED TO BALANCE EARTHWORK OPERATIONS OF THE CURRENT PHASE WITH APPROVAL OF CHESTER COUNTY CONSERVATION DISTRICT. MAXIMUM HEIGHT IS THIRTY-FIVE (35) FEET AND SIDE SLOPES SHALL BE 2:1 OR FLATTER. PLACE 12 INCH SILT SOCK BELOW THE STOCKPILES PRIOR TO STOCKPILE OPERATIONS. IMMEDIATELY STONE DISTURBED AREAS IN THE ROADWAY ONCE FINAL GRADES HAVE BEEN ACHIEVED. IMMEDIATELY TEMPORARILY STABILIZE ALL DISTURBED AREAS WHICH WILL NOT BE RE-DISTURBED WITHIN 4 DAYS.

AFTER SITE BULK SITE GRADING OCCURS ALL AREAS WHICH WILL NOT BE RE-DISTURBED PROMPTLY, SPECIFICALLY E&S BMPS, LAWN AREAS, BUILDING PADS AND SURROUNDING AREAS, TOPSOIL SHALL BE PLACED AND PERMANENTLY SEEDED UNTIL HOME CONSTRUCTION COMMENCES. ALL OTHER AREAS SHALL BE FINE GRADED AND HAVE TOPSOIL PLACED AND BE PERMANENTLY SEEDED AS SOON AS PRACTICALLY POSSIBLE.

8. THIS STEP MAY BE COMPLETED CONCURRENTLY WITH STEP 7, BEGIN CONSTRUCTION OF CURBING, SIDEWALKS AND UTILITIES INCLUDING WATERLINES, SEWER LINES AND STORM SEWERS FOLLOWING THE UTILITY LINE TRENCH EXCAVATION NOTES BELOW. CONSTRUCTION OF THE MODEL HOME MAY BEGIN CONCURRENTLY WITH THE UTILITY WORK UPON APPROVAL OF BUILDING PERMIT APPLICATION BY TOWNSHIP. INLETS A34-A33-A35-A32-A1 MAY BE INSTALLED HOWEVER UNDERGROUND INFILTRATION TRENCH A SHALL NOT BE CONSTRUCTED UNTIL THE TRIBUTARY AREA IS STABILIZED. IMMEDIATELY INSTALL INLET PROTECTION ON INLETS 32, 33, 34 & 35 AFTER INSTALLATION. INLETS NOT AT GRADE SHALL BE TEMPORARILY INSTALLED FOLLOWING THE NOT AT GRADE INLET INSTALLATION DETAIL UNTIL THE BINDER COURSE IS PAVED. STORM SEWERS SHALL TEMPORARILY HAVE FILL PLACED ABOVE THEM TO ACHIEVE A MINIMUM OF 1 FOOT OF COVER TO AVOID THE CRUSHING OF STORM SEWERS. BEGIN ROUGH GRADING LAWN AREAS, PADDING BUILDING AREAS AND CONSTRUCT BUILDINGS. STRIP AND STOCKPILE TOPSOIL IN AREA INDICATED ON THE PLAN OR AT OTHER FIELD ACCEPTABLE LOCATIONS SUCH AS ADJACENT PHASES AS MAY BE REQUIRED TO BALANCE EARTHWORK OPERATIONS OF THE CURRENT PHASE WITH APPROVAL OF CHESTER COUNTY CONSERVATION DISTRICT. IT IS ANTICIPATED THAT ALL THE BUILDINGS WILL NOT BE CONSTRUCTED AT THE SAME TIME; ALL BUILDING PADS THAT WILL NOT BE IMMEDIATELY CONSTRUCTED SHALL BE IMMEDIATELY STABILIZED. BIO-RETENTION BASIN B MAY BE ROUGH GRADED, HOWEVER AMENDED SOILS IN THE BOTTOM OF THE FACILITY SHALL NOT BE INSTALLED UNTIL ALL TRIBUTARY AREAS MEET THE STABILIZATION CRITERIA. **THIS IS A CRITICAL STAGE OF THE PCSM PLAN AND NEEDS A LICENSED PROFESSIONAL ONSITE DURING CONSTRUCTION.** BEGIN INSTALLING PERMANENT SWALES 1, 2, 3, 4 & 5 AS NECESSARY BASED ON SITE GRADING COMMENCES, IMMEDIATELY PERMANENTLY STABILIZE SWALE PER CHANNEL LINING SPECIFICATIONS AND STABILIZE ALL DISTURBED AREAS THAT WILL NOT BE RE-DISTURBED WITHIN 4 DAYS. REFER TO THE POST CONSTRUCTION STORMWATER MANAGEMENT PLANS TO DETERMINE AREAS WITHIN SWALES THAT REQUIRE AMENDED SOILS, THESE AREAS REQUIRE SOIL SUPPLEMENTS AND ARE **A CRITICAL STAGE OF CONSTRUCTION AND NEEDS A LICENSED PROFESSIONAL ONSITE DURING CONSTRUCTION.** FOLLOW THE SOIL AMENDMENT INSTALLATION PROCEDURE ON THE POST CONSTRUCTION STORMWATER MANAGEMENT PLANS. CONTRACTOR SHOULD USE CAUTION TO ENSURE ALL SEDIMENT LADEN STORMWATER IS ROUTED INTO A SEDIMENT BASIN OR TO ANOTHER EROSION CONTROL DEVICE. IMMEDIATELY TEMPORARILY STABILIZE ALL DISTURBED AREAS WHICH WILL NOT BE RE-DISTURBED WITHIN 4 DAYS.

   CONSTRUCTION OF MODEL HOMES MAY BEGIN CURRENTLY WITH THE UTILITY WORK UPON APPROVAL OF BUILDING PERMIT APPLICATIONS BY THE TOWNSHIP. IT IS ANTICIPATED THAT LOTS 34 THROUGH 39 WILL BE THE INITIAL HOMES TO BE CONSTRUCTED.

9. BEGIN FINE GRADING OF STONE BASE IN PREPARATION FOR PAVING THE ROAD. PAVE THE ROAD WITH THE BINDER COURSE AND IMMEDIATELY STABILIZE ANY DISTURBED AREAS. INSTALL WALKING TRAILS IN WOODLAND OPEN SPACE AND AROUND SITE HOWEVER PERVIOUS PAVEMENT WALKING TRAILS SHALL NOT BE INSTALLED UNTIL THE TRIBUTARY AREA MEETS THE STABILIZATION CRITERIA. IMMEDIATELY STABILIZE ALL DISTURBED AREAS WHICH WILL NOT BE RE-DISTURBED WITHIN 4 DAYS.

10. BEGIN FINAL GRADING OF ALL DISTURBED LAWN AREAS, THIS SHALL BE DONE WITH CARE TO AVOID COMPACTION IN LAWN AND LANDSCAPED AREAS. REFER TO THE POST CONSTRUCTION STORMWATER MANAGEMENT PLANS TO DETERMINE AREAS THAT REQUIRE AMENDED SOILS, **THESE AREAS REQUIRE SOIL SUPPLEMENTS AND ARE A CRITICAL STAGE OF CONSTRUCTION AND NEEDS A LICENSED PROFESSIONAL ONSITE DURING CONSTRUCTION.** FOLLOW THE SOIL AMENDMENT INSTALLATION PROCEDURE ON THE POST CONSTRUCTION STORMWATER MANAGEMENT PLANS. ALL LAWN AND LANDSCAPED AREAS SHALL BE DRESSED WITH AT LEAST 4" OF TOPSOIL. IF LAWN AND LANDSCAPED AREAS ARE COMPACTED, THE CONTRACTOR SHOULD SCARIFY THE SUBSOIL 6 TO 12 INCHES ALONG THE CONTOUR BEFORE PLACEMENT OF TOPSOIL. IF THE LAWN AND LANDSCAPED AREAS ARE NOT COMPACTED, THE CONTRACTOR SHOULD SCARIFY THE SUBSOIL 3 TO 5 INCHES TO PERMIT THE BONDING OF TOPSOIL AND PREVENT TOPSOIL FROM SLIDING DOWN THE SLOPE. IMMEDIATELY AFTER TOPSOIL PLACEMENT SEED AREAS AND PLACE EROSION CONTROL BLANKET OVER 3:1 SLOPES. CAUTION SHOULD BE USED TO ENSURE THE SOILS ARE NOT COMPACTED. NO MORE THAN 15,000 SQUARE FEET OF DISTURBED AREA AT FINAL GRADE SHOULD BE LEFT WITHOUT SEEDING AND MULCHING. AFTER THE SITE IS AT FINAL GRADE INSTALLATION OF THE PROPOSED TREES SHALL BE COMPLETED. THIS IS A CRITICAL STAGE OF THE PCSM PLAN AND NEEDS A LICENSED PROFESSIONAL ONSITE DURING CONSTRUCTION. IMMEDIATELY TEMPORARILY STABILIZE ALL DISTURBED AREAS THAT WILL NOT BE RE-DISTURBED WITHIN 4 DAYS.

11. AFTER THE TRIBUTARY AREAS TO THE PERVIOUS PAVEMENT MEETS THE STABILIZATION CRITERIA, BEGIN INSTALLING PERVIOUS PAVEMENT FOLLOWING THE PERVIOUS PAVEMENT CONSTRUCTION SEQUENCE OF THE PCSM PLANS. THIS CAN BE COMPLETED AT ANY STEP OF THE SEQUENCE OF CONSTRUCTION AS LONG AS THE TRIBUTARY AREA MEETS THE STABILIZATION CRITERIA. **THIS IS A CRITICAL STAGE OF THE PCSM PLAN AND NEEDS A LICENSED PROFESSIONAL ONSITE DURING CONSTRUCTION.** AFTER FINAL GRADING OF LAWN AREAS HAS BEEN COMPLETED, BEGIN INSTALLING PROPOSED TREES AND SHRUBS FOLLOWING THE LANDSCAPE RESTORATION CONSTRUCTION SEQUENCE ON THE PCSM PLANS ALONG WITH THE LANDSCAPE PLANS. **THIS IS A CRITICAL STAGE OF THE PCSM PLAN AND NEEDS A LICENSED PROFESSIONAL ONSITE DURING CONSTRUCTION.** FOLLOWING GUIDANCE ON THE LANDSCAPE PLANS, COMPLETE THE REHABILITATION, REPLANTING, INVASIVE SPECIES REMOVAL AND RESTORATION OF THE WOODLAND OPEN SPACE, THIS WORK CAN BE COMPLETED AT ANY TIME AFTER THE INSTALLATION OF THE WALKING TRAILS. IMMEDIATELY STABILIZE ALL DISTURBED AREAS THAT WILL NOT BE RE-DISTURBED WITHIN 4 DAYS.

12. AFTER FINAL SITE STABILIZATION HAS BEEN ACHIEVED TO EACH RESPECTIVE STORMWATER FACILITY (SEE STABILIZATION DEFINITION), CONTACT CHESTER COUNTY CONSERVATION DISTRICT TO PERFORM A SITE INSPECTION AND OBTAIN THEIR APPROVAL BEFORE INSTALLATION OF UNDERGROUND INFILTRATION TRENCH A AND CONVERSION OF INFILTRATION BASIN A AND BIO-RETENTION BASIN B TO THEIR FINAL CONDITION INCLUDING UNDERDRAINS AND PLANTING SOIL MAY COMMENCE. EXTREME CARE SHOULD BE TAKEN TO ENSURE SILTATION AND COMPACTION OF THESE FACILITIES DOES NOT OCCUR. **THIS IS A CRITICAL STAGE OF THE PCSM PLAN AND NEEDS A LICENSED PROFESSIONAL ONSITE DURING CONSTRUCTION.** ALL LAWN AND LANDSCAPED AREAS SHALL BE DRESSED WITH AT LEAST 4" OF TOPSOIL. IF LAWN AND LANDSCAPED AREAS ARE COMPACTED, THE CONTRACTOR SHOULD SCARIFY THE SUBSOIL 6 TO 12 INCHES ALONG THE CONTOUR BEFORE PLACEMENT OF TOPSOIL. IF THE LAWN AND LANDSCAPED AREAS ARE NOT COMPACTED, THE CONTRACTOR SHOULD SCARIFY THE SUBSOIL 3 TO 5 INCHES TO PERMIT THE BONDING OF TOPSOIL AND PREVENT TOPSOIL FROM SLIDING DOWN THE SLOPE. IMMEDIATELY AFTER TOPSOIL PLACEMENT SEED AREAS AND PLACE EROSION CONTROL BLANKET OVER 3:1 SLOPES. CAUTION SHOULD BE USED TO ENSURE THE SOILS ARE NOT COMPACTED. NO MORE THAN 15,000 SQUARE FEET OF DISTURBED AREA AT FINAL GRADE SHOULD BE LEFT WITHOUT SEEDING AND MULCHING. IMMEDIATELY TEMPORARILY STABILIZE ALL DISTURBED AREAS THAT WILL NOT BE RE-DISTURBED WITHIN 4 DAYS.

13. AFTER FINAL SITE STABILIZATION HAS BEEN ACHIEVED (SEE STABILIZATION DEFINITION), ALL TEMPORARY EROSION AND SEDIMENT BMP'S MUST BE REMOVED. AREAS DISTURBED DURING REMOVAL OF THE BMP'S MUST BE IMMEDIATELY PERMANENTLY STABILIZED. UPON PERMANENT STABILIZATION ACROSS THE ENTIRE SITE AND INSTALLATION OF PCSM BMPS IN ACCORDANCE WITH THE APPROVED PLAN PREPARED AND IMPLEMENTED IN ACCORDANCE WITH 25 PA. CODE 102.4 AND 102.8, THE PERMITTEE AND/OR CO-PERMITTEE SHALL SUBMIT A NOTICE OF TERMINATION (NOT) TO THE DEPARTMENT OR AUTHORIZED CONSERVATION DISTRICT.

RECHARGE AREA CONSTRUCTION

1. RECHARGE AREAS SHALL NOT BE CONSTRUCTED OR CONVERTED UNTIL THE WATERSHED TO THEM HAS BEEN STABILIZED WITH A MINIMUM 70% UNIFORM VEGETATIVE COVER. THE CONSERVATION DISTRICT SHALL INSPECT THE PROPERTY PRIOR TO THE INSTALLATION OF RECHARGE AREAS TO VERIFY STABILIZATION OF THE PROPERTY.

2. HEAVY CONSTRUCTION EQUIPMENT IS TO BE KEPT OFF OF THE RECHARGE AREAS TO PREVENT COMPACTION.

3. RECHARGE AREAS SHALL BE FENCED OFF WITH ORANGE CONSTRUCTION FENCING TO PREVENT COMPACTION OF THE SOIL.

4. CONSTRUCTION OF THE RECHARGE AREAS SHALL BE FROM THE SIDE OF THE BASINS TO PREVENT COMPACTION OF THE SOIL.

5. IF UNFAVORABLE CONDITIONS ARE ENCOUNTERED DURING THE CONSTRUCTION OF THE RECHARGE AREAS, SUCH AS SHALLOW BEDROCK OR GROUNDWATER, THE TOWNSHIP, CONSERVATION DISTRICT, OWNER OR DESIGN ENGINEER SHALL BE CONTACTED TO DETERMINE A MORE SUITABLE LOCATION ON THE SITE.

6. WHEN A SOIL EROSION CONTROL FACILITY, SUCH AS A BASIN OR TRAP, IS CONVERTED TO A STORMWATER MANAGEMENT BMP, THEN THE FOLLOWING CONDITIONS SHALL BE IMPLEMENTED:
   a. SOIL AT THE BOTTOM OF THE BASIN OR TRAP AND SEDIMENT FOREBAY SHALL BE SCRAPED OFF TO A DEPTH OF 2 FEET BELOW THE BOTTOM OF THE BASIN SO THAT FINE SILT, WHICH MIGHT IMPEDE THE FLOW OF WATER INTO THE GROUND, IS REMOVED.
   b. THE MODIFICATION OF THE FACILITIES SHALL BE FROM THE SIDES OF THE BASINS OR TRAPS TO PREVENT COMPACTION OF THE BASIN.
   c. ADDITIONAL SOIL PERCOLATION TESTING SHALL BE MADE PRIOR TO THE INSTALLATION OF THE RECHARGE AREAS TO INSURE THAT THE BASINS WILL PERCOLATE.

UTILITY LINE TRENCH EXCAVATION NOTES

1. WORK CREWS AND EQUIPMENT FOR TRENCHING, PLACEMENT OF PIPE, PLUG CONSTRUCTION AND BACKFILLING WILL BE SELF CONTAINED AND SEPARATE FROM CLEARING AND GRUBBING AND SITE RESTORATION AND STABILIZATION OPERATIONS.
2. ALL SOIL EXCAVATED FROM THE TRENCH WILL BE PLACED ON THE UPHILL SIDE OF THE TRENCH.
3. LIMIT DAILY TRENCH EXCAVATION TO THE LENGTH OF PIPE PLACEMENT, PLUG INSTALLATION AND BACKFILLING THAT CAN BE COMPLETED THE SAME DAY.
4. WATER THAT ACCUMULATES IN THE OPEN TRENCH WILL BE COMPLETELY REMOVED BY PUMPING BEFORE PIPE PLACEMENT AND/OR BACKFILLING BEGINS. WATER REMOVED FROM THE TRENCH SHALL BE PUMPED THROUGH A FILTRATION DEVICE.
5. ON THE DAY FOLLOWING PIPE PLACEMENT AND TRENCH BACKFILLING, THE DISTURBED AREA WILL BE GRADED TO FINAL CONTOURS AND IMMEDIATELY STABILIZED.

TEMPORARY CONTROL MEASURES

TEMPORARY CONTROL MEASURES WHICH WERE PREVIOUSLY DISCUSSED ARE AS FOLLOWS:

1. SILT SOCKS BARRIERS SHALL BE PROVIDED TO RETARD RUNOFF AND COLLECT SEDIMENT.

2. TEMPORARY SEEDING OF TOPSOIL STOCKPILE AREA AND BARE EARTH SHALL BE PROVIDED FOR AREAS WHICH WILL REMAIN UNSTABILIZED.

3. TEMPORARY STONE BALLAST TIRE CLEANERS SHALL BE PROVIDED AT CONSTRUCTION ENTRANCES.

4. SHOULD WORK BE EXTENDED INTO WINTER MONTHS, AND IF TEMPORARY SEEDING IS NOT FEASIBLE, EROSION MAY BE CONTROLLED BY PLACING STRAW MULCH OVER DISTURBED AREAS. THIS MULCH WILL BE MAINTAINED UNTIL WEATHER CONDITIONS PERMIT SEEDING.

5. SEDIMENT BASINS TO SETTLE THE SEDIMENT OUT OF STORMWATER RUNOFF.

6. EROSION CONTROL BLANKETS AND SPILLWAY MATTING ARE PROVIDED TO MITIGATE EROSION WHILE VEGETATION IS ESTABLISHED.

7. INLET PROTECTION IS PROVIDED TO PROTECT PERMANENT STORMWATER FACILITIES DURING CONVERSION ACTIVITIES.

8. CONCRETE WASHOUT AREAS ARE PROVIDED FOR CONCRETE TRUCKS TO EMPTY THERE LOADS.

9. SEDIMENT FOREBAY'S ARE PROPOSED TO PRE-TREAT STORMWATER AND ALLOW SEDIMENT TO DROP OUT BEFORE THE STORMWATER IS ROUTED INTO THE SEDIMENT TRAP.

10. SWALES ARE PROVIDED TO ROUTE STORMWATER FROM DISTURBED AREAS INTO SEDIMENTS FACILITIES.

PERMANENT CONTROL MEASURES

PERMANENT CONTROL MEASURES WHICH ARE DESIGNED TO CONTROL SEDIMENT AND EROSION AND RUNOFF FROM THE SITE ARE AS FOLLOWS:

1. PAVED STREETS, AND PARKING LOTS.

2. ALL LAWN AREAS SHALL BE ADEQUATELY SEEDED AND STABILIZED TO PROVIDE PERMANENT CONTROL OF EROSION AFTER COMPLETION OF CONSTRUCTION. 70% UNIFORM VEGETATIVE STABILIZATION IS REQUIRED.

3. PERMANENT STORMWATER INFILTRATION BASIN/PONDS SHALL CONTROL THE RATE AND VOLUME OF DISCHARGE FROM THE SITE AT BETTER THAN PRE-DEVELOPED CONDITIONS.

MAINTENANCE OF EROSION CONTROL FACILITIES

THE GENERAL CONTRACTOR, OR IN THE ABSENCE OF A GENERAL CONTRACTOR, THE OWNER, SHALL BE RESPONSIBLE FOR IMPLEMENTING AND MAINTAINING ALL SOIL EROSION CONTROLS.

THE CONTRACTOR SHALL, AT THE END OF EACH WEEK AS WELL AS EACH RUNOFF EVENT, INSPECT ALL DRAINAGE AND EROSION CONTROL FACILITIES TO DETERMINE IF THEY STILL FUNCTION.

ROCK CONSTRUCTION ENTRANCES THICKNESS SHALL BE CONSTANTLY MAINTAINED TO THE SPECIFIED DIMENSIONS BY ADDING ROCK. A STOCKPILE SHALL BE MAINTAINED ON SITE FOR THIS PURPOSE. AT THE END OF EACH CONSTRUCTION DAY, ALL SEDIMENT DEPOSITED ON PAVED ROADWAYS SHALL BE REMOVED AND RETURNED TO THE CONSTRUCTION SITE.

SILT SOCKS SHALL BE CLEARED OF SILT WHEN SILT REACHES HALF THE ABOVEGROUND HEIGHT OF THE SOCK. SILT SOCKS SHALL BE INSPECTED WEEKLY AND AFTER EACH RUNOFF EVENT. DAMAGED SOCKS SHALL BE REPAIRED ACCORDING TO MANUFACTURER'S SPECIFICATIONS OR REPLACED WITHIN 24 HOURS OF INSPECTION. BIODEGRADABLE FILTER SOCKS SHALL BE REPLACED AFTER 6 MONTHS; PHOTODEGRADABLE SOCKS AFTER 1 YEAR. POLYPROPYLENE SOCKS SHALL BE REPLACED ACCORDING TO MANUFACTURER RECOMMENDATIONS.

ROCKS FILTERS SHALL BE CLEARED OF SILT WHEN ACCUMULATIONS REACH 1/3 THE HEIGHT OF THE OUTLET.

CONCRETE WASHOUT AREAS SHALL BE CLEARED OF CONCRETE DEBRIS WHEN IT REACHES HALF-WAY UP SOCK. CONCRETE MUST BE REMOVED BY FOLLOWING PROPER RECYCLING AND DISPOSAL OF MATERIALS SPECIFICATIONS IN THE GENERAL NOTES SECTION.

FILTER BAGS SHALL BE INSPECTED DAILY, IF ANY PROBLEM IS DETECTED PUMPING SHALL CEASE IMMEDIATELY AND NOT RESUME UNTIL THE PROBLEM IS CORRECTED.

EROSION CONTROL BLANKETED AREAS SHALL BE INSPECTED WEEKLY AND AFTER EACH RUNOFF EVENT UNTIL PERENNIAL VEGETATION IS ESTABLISHED TO A MINIMUM UNIFORM 70% COVERAGE THROUGHOUT THE BLANKETED AREA. DAMAGED OR DISPLACED BLANKETS SHALL BE RESTORED OR REPLACED WITHIN 4 CALENDAR DAYS.

INLET FILTER BAGS SHALL BE INSPECTED ON A WEEKLY BASIS AND AFTER EACH RUNOFF EVENT. BAGS SHALL BE EMPTIED AND RINSED OR REPLACED WHEN HALF FULL OR WHEN FLOW CAPACITY HAS BEEN REDUCED SO AS TO CAUSE FLOODING OR BYPASSING OF THE INLET. DAMAGED OR CLOGGED BAGS SHALL BE REPLACED. A SUPPLY SHALL BE MAINTAINED ON SITE FOR REPLACEMENT OF BAGS. ALL NEEDED REPAIRS SHALL BE INITIATED IMMEDIATELY AFTER THE INSPECTION. DISPOSE OF ACCUMULATED SEDIMENT AS WELL AS ALL USED BAGS ACCORDING TO THE GENERAL NOTES.

SEDIMENT BASINS AND TRAPS SHALL BE INSPECTED ON AT LEAST A WEEKLY BASIS AND AFTER EACH RUNOFF EVENT. A CLEAN OUT STAKE SHALL BE PLACED NEAR THE CENTER OF EACH BASIN; ACCUMULATED SEDIMENT SHALL BE REMOVED WHEN IT HAS REACHED THE CLEAN OUT LEVEL MARKED ON THE STAKE AND THE BASIN RESTORED TO ITS ORIGINAL DIMENSIONS. DISPOSE OF MATERIALS REMOVED FROM THE BASIN IN THE MANNER DESCRIBED IN THE GENERAL NOTES. BASIN EMBANKMENTS, SPILLWAYS, AND OUTLETS SHALL BE CHECKED FOR EROSION, PIPING AND SETTLEMENT. NECESSARY REPAIRS SHALL BE MADE IMMEDIATELY, DISPLACED RIPRAP WITHIN THE OUTLET ENERGY DISSIPATER SHALL BE REPLACED IMMEDIATELY, ACCUMULATED SEDIMENT SHALL BE REMOVED AND DISTURBED AREAS INSIDE THE BASIN STABILIZED BEFORE CONVERSION TO A STORMWATER MANAGEMENT FACILITY. CLOGGED OR DAMAGED SPILLWAYS SHALL BE REPAIRED IMMEDIATELY, TRASH AND OTHER DEBRIS SHALL BE REMOVED FROM THE BASIN AND RISER. THE FILTER BAG MAY BE USED TO DEWATER SATURATED SEDIMENT PRIOR TO ITS REMOVAL. ROCK FILTERS SHALL BE ADDED AS NECESSARY.

CHANNELS DIMENSIONS SHALL BE CONSTANTLY MAINTAINED. CHANNEL SHALL BE CLEANED WHENEVER TOTAL CHANNEL DEPTH IS REDUCED BY 25% AT ANY LOCATION. SEDIMENT DEPOSITES SHALL BE REMOVED WITHIN 24 HOURS OF DISCOVERY OR AS SOON AS SOIL CONDITIONS PERMIT ACCESS TO CHANNEL WITHOUT FURTHER DAMAGE. DAMAGED LININGS SHALL BE REPAIRED OR REPLACED WITHIN 48 HOURS OF DISCOVERY.

IF ADDITIONAL SILT SOCK, SEDIMENT TRAPS, SEDIMENT BASINS, OR SWALE DIVERSIONS ARE NECESSARY, THEY SHALL BE PROVIDED AS DIRECTED BY THE TOWNSHIP ENGINEER. ALL CHANGES MUST BE REVIEWED BY THE CHESTER COUNTY CONSERVATION DISTRICT. SEDIMENT DEPOSITED BEHIND SILT BARRIERS, AND THE SEDIMENT BASINS SHALL BE REMOVED AND INCORPORATED INTO THE FINAL GRADING OPERATIONS ON THE SITE. IT IS NOT TO BE TAKEN OFF SITE.

WHEN THE ENTIRE PROJECT HAS BECOME STABILIZED, ANY TEMPORARY SEDIMENT AND EROSION CONTROLS SHALL BE REMOVED AND THE AREAS STABILIZED.

NPDES PERMIT NOTES

IF THE SITE WILL NEED TO IMPORT OR EXPORT MATERIAL FROM THE SITE, THE RESPONSIBILITY FOR PERFORMING ENVIRONMENTAL DUE DILIGENCE AND DETERMINATION OF CLEAN FILL WILL REST WITH THE DEVELOPER.

CLEAN FILL IS DEFINED AS: UNCONTAMINATED, NON-WATER SOLUBLE, NON-DECOMPOSABLE, INERT, SOLID MATERIAL. THE TERM INCLUDES SOIL, ROCK, STONE, DREDGED MATERIAL, USED ASPHALT, AND BRICK, BLOCK OR CONCRETE FROM CONSTRUCTION AND DEMOLITION ACTIVITIES THAT IS SEPARATE FROM OTHER WASTE AND IS RECOGNIZABLE AS SUCH. THE TERM DOES NOT INCLUDE MATERIALS PLACED IN OR ON THE WATERS OF THE COMMONWEALTH UNLESS OTHERWISE AUTHORIZED. (THE TERM "USED ASPHALT" DOES NOT INCLUDE MILLED ASPHALT OR ASPHALT THAT HAS BEEN PROCESSED FOR RE-USE).

CLEAN FILL AFFECTED BY A SPILL OR RELEASE OF A REGULATED SUBSTANCE: FILL MATERIALS AFFECTED BY A SPILL OR RELEASE OF A REGULATED SUBSTANCE STILL QUALIFIES AS CLEAN FILL PROVIDED THE TESTING REVEALS THAT THE FILL MATERIAL CONTAINS CONCENTRATIONS OF REGULATED SUBSTANCES THAT ARE BELOW THE RESIDENTIAL LIMITS IN TABLES FP-1A AND FP-1B FOUND IN THE DEPARTMENT'S POLICY "MANAGEMENT OF FILL".

ANY PERSON PLACING CLEAN FILL THAT HAS BEEN AFFECTED BY A SPILL OR RELEASE OF A REGULATED SUBSTANCE MUST USE FORM FP-001 TO CERTIFY THE ORIGIN OF THE FILL MATERIAL AND THE RESULTS OF THE ANALYTICAL TESTING TO QUALIFY THE MATERIAL AS CLEAN FILL. FORM FP-001 MUST BE RETAINED BY THE OWNER OF THE PROPERTY RECEIVING THE FILL. A COPY OF FORM FP-001 CAN BE FOUND AT THE END OF THESE INSTRUCTIONS.

ENVIRONMENTAL DUE DILIGENCE: THE APPLICANT MUST PERFORM ENVIRONMENTAL DUE DILIGENCE TO DETERMINE IF THE FILL MATERIALS ASSOCIATED WITH THE PROJECT QUALIFY AS CLEAN FILL. ENVIRONMENTAL DUE DILIGENCE IS DEFINED AS: INVESTIGATIVE TECHNIQUES, INCLUDING, BUT NOT LIMITED TO, VISUAL PROPERTY INSPECTIONS, ELECTRONIC DATA BASE SEARCHES, REVIEW OF PROPERTY OWNERSHIP, REVIEW OF PROPERTY USE HISTORY, SANBORN MAPS, ENVIRONMENTAL QUESTIONNAIRES, TRANSACTION SCREENS, ANALYTICAL TESTING, ENVIRONMENTAL ASSESSMENTS OR AUDITS. ANALYTICAL TESTING IS NOT A REQUIRED PART OF DUE DILIGENCE UNLESS VISUAL INSPECTION AND/OR REVIEW OF THE PAST LAND USE OF THE PROPERTY INDICATES THAT THE FILL MAY HAVE BEEN SUBJECTED TO A SPILL OR RELEASE OF REGULATED SUBSTANCE. IF THE FILL MAY HAVE BEEN AFFECTED BY A SPILL OR RELEASE OF A REGULATED SUBSTANCE, IT MUST BE TESTED TO DETERMINE IF IT QUALIFIES AS CLEAN FILL. TESTING SHOULD BE PERFORMED IN ACCORDANCE WITH APPENDIX A OF THE DEPARTMENT'S POLICY "MANAGEMENT OF FILL".

FILL MATERIAL THAT DOES NOT QUALIFY AS CLEAN FILL IS REGULATED FILL. REGULATED FILL IS WASTE AND MUST BE MANAGED IN ACCORDANCE WITH THE DEPARTMENT'S MUNICIPAL OR RESIDUAL WASTE REGULATIONS BASED ON 25 PA. CODE CHAPTERS 287 RESIDUAL WASTE MANAGEMENT OR 271 MUNICIPAL WASTE MANAGEMENT, WHICHEVER IS APPLICABLE. THESE REGULATIONS ARE AVAILABLE ON-LINE AT **WWW.PACODE.COM** .

CONSTRUCTION NOTICE

THIS NARRATIVE SHALL HANG ON A PEG ABOVE OR ALONG SIDE THE DRAWING/SHEET BOARD SO THAT IT WILL BE A READY REFERENCE TO ALL PARCEL ACTIVITY.

PLANS

THIS REPORT ACCOMPANIES PLANS ENTITLED "SEDIMENTATION AND EROSION CONTROL PLANS" AS PREPARED BY BURSICH ASSOCIATES, INC., POTTSTOWN, PENNSYLVANIA.

REVISIONS

IF ANY CHANGES ARE TO BE MADE TO THE LIMITS OF DISTURBANCE OR TO THE EROSION AND SEDIMENT CONTROL PLAN, THE BUILDER OR LANDOWNER WILL CONTACT THE CHESTER COUNTY CONSERVATION DISTRICT AT 610-489-4506 FOR THE ADEQUACY OF THESE CHANGES.

PLAN PREPARER

THIS PLAN WAS PREPARED BY A PERSON WITH OVER 12 YEARS' EXPERIENCE PREPARING SOIL EROSION CONTROL PLANS OF SMALLER, SIMILAR AND LARGER SIZES. IF THERE ARE ANY QUESTIONS REGARDING THE E&S PLANS CONTACT JASON JENKINS OF BURSICH ASSOCIATES INC., AT 484-941-0438.

© COPYRIGHT BURSICH ASSOCIATES, INC. 2018
ALL REPORTS, DOCUMENTS, SPECIFICATIONS, COMPUTER FILES, FIELD DATA, NOTES AND OTHER DOCUMENTS AND INSTRUMENTS PREPARED BY BURSICH ASSOCIATES, INC. AS INSTRUMENTS OF SERVICE SHALL REMAIN THE PROPERTY OF BURSICH ASSOCIATES, INC. AND THEREFORE SHALL RETAIN ALL COMMON LAW, STATUTORY AND OTHER RESERVED RIGHTS, INCLUDING THE COPYRIGHT THERETO. ANY USE, REUSE OR MODIFICATION/ALTERATION AND REPRODUCTION WITHOUT THE EXPRESS WRITTEN CONSENT OF BURSICH ASSOCIATES, INC. IS STRICTLY PROHIBITED. ANY USE, REUSE OR MODIFICATION/ALTERATION BY ANYONE WITHOUT WRITTEN CONSENT SHALL BE DEEMED AN AGREEMENT BETWEEN THE USER AND BURSICH ASSOCIATES, INC. WHICH SHALL INDEMNIFY AND SAVE HARMLESS BURSICH ASSOCIATES, INC. FOR ALL CLAIMS, DAMAGES, LOSSES AND EXPENSES ARISING FROM THE USE THEREFROM.

NO.	REVISION	DATE	BY
2	REVISED PER TOWNSHIP REVIEW LETTER DATED 12/11/18	1/30/19	BG
1	REVISED PER TOWNSHIP REVIEW LETTERS DATED 9/13/18 & 10/26/18	11/5/18	BG

SEAL

NORTH

MANAGER NF	
DESIGN KK	CHKD. BY
DRAFT BG	CHKD. BY
FILE ROU-01	DATE 8/9/2018
NOTES	SCALE NTS

BURSICH
Sharing your Vision

Corporate Headquarters
2129 East High Street
Pottstown, PA 19464
610-323-4040

Southampton Office
706 Lakeside Drive
Southampton, PA 18966

www.bursich.com

CLIENT
ROUSE/CHAMBERLIN, LTD
500 EXTON COMMONS
EXTON, PA 19341

SUBJECT
EROSION & SEDIMENT CONTROL NOTES

PRESERVE AT WILLISTOWN

WILLISTOWN TOWNSHIP, CHESTER COUNTY, PENNSYLVANIA

JOB NO. 187872

SHEET NO. 6 OF 6

DWG. NO. ES687872

P:\ROU-01\187872-00\dwg\LD_Plan\ES187872.dwg

WEST CHESTER PIKE (S.R. 0003)

POI WSHED A

POI WSHED B

POI WSHED C

POST-DEV BYPASS A

POST-DEV BYPASS B

POST-DEV BYPASS C

POST-DEV BASIN A

POST-DEV BASIN B

POST-DEV FOREBAY A

ROAD A

ROAD B

ROAD C

UG TRENCH A

INFILTRATION BASIN A

FOREBAY A

BIO-RETENTION BASIN B

REFORESTATION AREA (TYP.)

PERVIOUS PAVING (TYP.)

LIMITS OF DISTURBANCE (TYP.)

LIMITS OF NPDES (TYP.)

SOIL AMENDMENT (TYP.)

DISCONNECT NON-ROOF IMPERVIOUS (TYP.)

DISCONNECT ROOF LEADERS (TYP.)

PROTECT EXISTING TREES (TYP.)

RECEIVING WATERS (POI A)

RECEIVING WATERS (POI B&C)

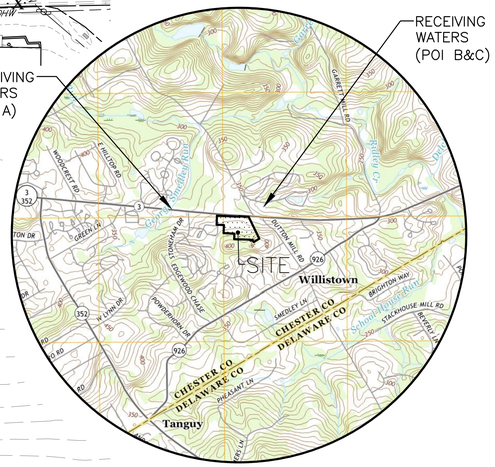

LOCATION MAP

SCALE: 1"=2000'

PROPOSED LEGEND

- BUILDING
- ROAD CENTERLINE
- DEPRESSED CURB
- EDGE OF PAVING
- CURB
- STORMWATER PIPE
- C&M TYPE STORMWATER INLET
- HEADWALL/ENDWALL
- RIP-RAP APRON
- STORMWATER MANHOLE
- STORMWATER STRUCTURE IDENTIFIER
- INTERMEDIATE CONTOUR (362)
- INDEX CONTOUR (360)
- WOODS LINE
- UNIT NUMBER (15)
- FENCE
- VERTICAL TEXT DENOTES PROPOSED FEATURE
- WATERSHED
- TIME OF CONCENTRATION
- REFORESTATION AREA
- PERVIOUS PAVING
- SOIL AMENDMENT
- PLANTING SOIL
- DISCONNECT ROOF LEADERS
- DISCONNECT NON-ROOF IMPERVIOUS
- MINIMIZE TOTAL DISTURBED AREA
- PROTECT EXISTING TREES
- INFILTRATION TESTPIT (TPX)
- LIMIT OF NPDES
- LIMIT OF DISTURBANCE

0 50' 100'

GRAPHIC SCALE: 1"=50'

EXISTING FEATURES LEGEND

- SITE BENCHMARK
- PROPERTY LINE
- ADJOINER LINE
- LEGAL RIGHT OF WAY
- EASEMENT LINE
- CONCRETE CURB
- EDGE OF PAVE
- EDGE OF DRIVE
- CONTOURS (372, 370)
- SPOT ELEVATION (200.0)
- WOOD LINE
- TREES
- STORM SEWER
- M&C TYPE INLETS
- 15-25% SLOPES
- SOILS (GdD)
- SLANTED TEXT DENOTES EXISTING FEATURE

CRITICAL STAGES

1. INFILTRATION BASIN A
2. UNDERGROUND INFILTRATION TRENCH A
3. BIO-RETENTION BASIN B
4. SOIL AMENDMENT AREAS
5. PERVIOUS PAVEMENT

SOILS

MAP UNIT SYMBOL	MAP UNIT NAME
GdB	GLADSTONE GRAVELLY LOAM, 3-8% SLOPES
GdD	GLADSTONE GRAVELLY LOAM, 15-25% SLOPES
UugB	URBAN LAND-UDORTHENTS, SCHIST AND GNEISS COMPLEX, 0-8% SLOPES
UugD	URBAN LAND-UDORTHENTS, SCHIST AND GNEISS COMPLEX, 8-25% SLOPES

REFER TO LANDSCAPING PLANS FOR PLANTING SPECIFICATIONS

© COPYRIGHT BURSICH ASSOCIATES, INC., 2018
THE PLANS, SPECIFICATIONS, DRAWINGS, REPORTS, DESIGNS, CALCULATIONS, FIELD WORK, NOTES AND OTHER DOCUMENTS AND INSTRUMENTS PREPARED BY BURSICH ASSOCIATES, INC. AS INSTRUMENTS OF SERVICE SHALL REMAIN THE PROPERTY OF BURSICH ASSOCIATES, INC. AND THEREFORE SHALL RETAIN ALL COMMON LAW, STATUTORY AND OTHER RESERVED RIGHTS, INCLUDING THE COPYRIGHT THEREIN. THE PLANS, SPECIFICATIONS, DRAWINGS, REPORTS, DESIGNS, CALCULATIONS, WITHOUT THE EXPRESS WRITTEN CONSENT OF BURSICH ASSOCIATES, INC. IS STRICTLY PROHIBITED. ANY USE, REUSE OR MODIFICATION BY OTHERS WITHOUT WRITTEN EXPRESS WRITTEN CONSENT OF BURSICH ASSOCIATES, INC. IS AT THE USER AND SHALL INDEMNIFY AND SHALL HOLD HARMLESS BURSICH ASSOCIATES, INC. FOR ALL CLAIMS, DAMAGES, LOSSES AND EXPENSES ARISING FROM THE USE THEREFROM.

NO.	REVISION	DATE	BY
2	REVISED PER TOWNSHIP REVIEW LETTER DATED 12/11/18	1/30/19	BG
1	REVISED PER TOWNSHIP REVIEW LETTERS DATED 9/13/18 & 10/26/18	11/5/18	BG

SEAL

NORTH

MANAGER NF	
DESIGN KK	CHKD. BY
DRAFT BG	CHKD. BY
FILE ROU-01	DATE 8/9/2018
NOTES	SCALE 1"=50'

BURSICH Sharing your Vision

Corporate Headquarters
2129 East High Street
Pottstown, PA 19464
610-323-4040

Southampton Office
706 Lakeside Drive
Southampton, PA 18966

www.bursich.com

CLIENT

ROUSE/CHAMBERLIN, LTD
500 EXTON COMMONS
EXTON, PA 19341

SUBJECT

POST CONSTRUCTION STORMWATER MANAGEMENT PLAN

PRESERVE AT WILLISTOWN

WILLISTOWN TOWNSHIP, CHESTER COUNTY, PENNSYLVANIA

JOB NO. 187872

SHEET NO. 1 OF 5

DWG. NO. PC187872

P:\ROU-01\187872-00\dwg\LD_Plan\PC187872.dwg

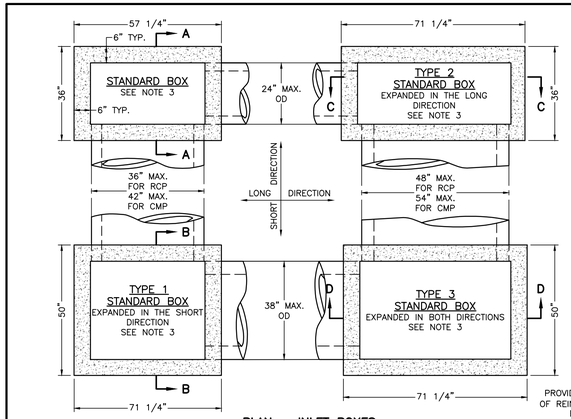

PLAN – INLET BOXES
NO SCALE

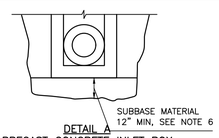

DETAIL A
PRECAST CONCRETE INLET BOX
BASE PREPARATION
NO SCALE

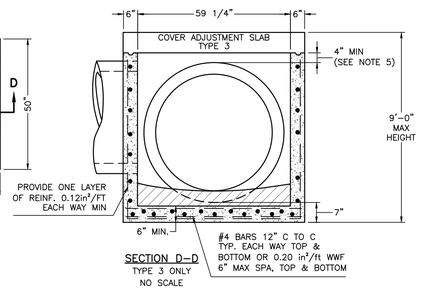

SECTION D–D
TYPE 3 ONLY
NO SCALE

NOTES

1. CONSTRUCT INLET BOXES IN ACCORDANCE WITH THE REQUIREMENTS OF PUBLICATION 408, SECTION 714.
2. PERMIT ONLY PRECAST INLET BOXES SUPPLIED BY A MANUFACTURER LISTED IN BULLETIN 15. USE CLASS AA CEMENT CONC FOR PRECAST BOXES. FOR DEVIATIONS OR MODIFICATIONS OF THE STANDARDS, SUBMIT SHOP DRAWINGS FOR APPROVAL.
3. PROVIDE STANDARD INLET BOXES AND COVER ADJUSTMENT SLABS WITH A 24"x 46" OPENING TO ACCOMMODATE STANDARD TOP COMPONENTS.
4. FOR INLETS THAT DEVIATE FROM THE STANDARD SUBMIT SPECIAL DETAILS AND DESIGN FOR THE INLET WALLS AND BASE TO THE BUREAU OF CONSTRUCTION FOR REVIEW AND APPROVAL. CONSTRUCT INLETS THAT EXCEED 5' IN HEIGHT WITH STEPS SIMILAR TO MANHOLES (SEE RC–39M). FOR INLETS OTHER THAN AS SHOWN ON THE STANDARDS, PROVIDE REINFORCEMENT BASED ON PHL 93 (HS 25) LOADING AND IN ACCORDANCE WITH PUBLICATION 408.
5. LOCATE PIPE OR PIPES, AS INDICATED, WITH THE INLET BOTTOM SHAPED TO CHANNEL THE FLOW TOWARD THE OUTLET PIPE. WHEN PROJECT CONDITIONS REQUIRE PIPE BLOCKOUTS TO BE FORMED WITHIN 4" FROM THE TOP OF THE INLET BOX, PROVIDE AN ADDITIONAL #3 REINFORCEMENT BAR LOCATED 1 1/2" FROM THE TOP OF THE INLET BASE, FULL WIDTH ALONG THE INLET FACE. REMOVE ANY VISIBLE PORTION OF THE BAR, IF REQUIRED DURING INSTALLATION AND PRIOR TO JOINING THE PIPE TO THE INLET. IF REINFORCED CONCRETE PIPE IS USED, THE PIPE BLOCKOUT MAY BE FORMED 'FLUSH' WITH THE INLET BASE. LIMIT PIPE BLOCKOUT OF WALL TO 1".
6. PLACE SUBBASE MATERIAL MEETING THE REQUIREMENTS OF PUBLICATION 408, SECTION 350.2, IN LAYERS 4" THICK, COMPACTED TO A DENSITY SATISFACTORY TO THE ENGINEER AND INCIDENTAL TO THE INLET PAY ITEM.
7. FOR PIPE DIAMETERS LARGER THAN 48" RCP OR 54" CMP, USE A MODIFIED INLET BOX, RC–34M SHEET 9.
8. PROVIDE CONSTRUCTION JOINTS AS REQUIRED FOR INLET BOXES THAT ARE NOT MONOLITHIC. SEE DETAILS A & B, RC–34M SHEET 7.
9. TAPERS MAY BE PROVIDED ON VERTICAL FACES OF PRECAST INLET BOX BASE UNITS TO FACILITATE FORM STRIPPING. TAPERS WILL RESULT IN INTERNAL BOTTOM DIMENSIONS THAT VARY TO A MAXIMUM OF 1".
10. PROVIDE SUITABLE LIFTING DEVICES FOR HANDLING AND INSTALLATION. GALVANIZE METAL DEVICES AS SPECIFIED IN PUB. 408 SECTION 1105. TAPERS MAY BE PROVIDED ON INSIDE VERTICAL FACES OF PRECAST INLET TOPS TO FACILITATE FORM STRIPPING. TAPERS WILL RESULT IN INTERNAL BOTTOM DIMENSIONS THAT VARY TO A MAXIMUM OF 1".

PIPE DIA.	L	W	A
18"	4.0'	4.0'	12"
24"	4.3'	4.25'	12"
36"	5.5'	4.7'	12"
42"	6.0'	5.8'	12"
48"	6.5'	7.0'	12"
54"	7.0'	8.1'	12"
60"	7.5'	9.25'	12"
72"	8.5'	11.5'	12"

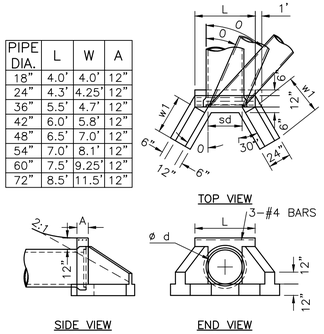

TYPE D–W ENDWALL
NO SCALE

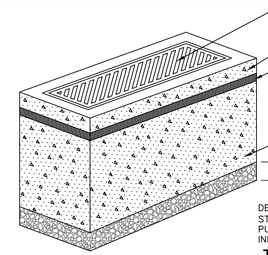

DETAIL FOR GENERAL REFERENCE ONLY. ACTUAL STRUCTURE TO BE IN ACCORDANCE W/ PENNDOT PUB. 72, RC–45M, LATEST EDITION. ALL STORM INLETS SHALL CONTAIN TROUT LOGO PLATE.

TYPE M INLET
NO SCALE

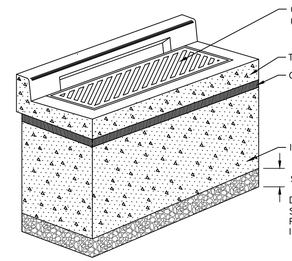

DETAIL FOR GENERAL REFERENCE ONLY. ACTUAL STRUCTURE TO BE IN ACCORDANCE W/ PENNDOT PUB. 72, RC–45M, LATEST EDITION. ALL STORM INLETS SHALL CONTAIN TROUT LOGO PLATE.

TYPE C INLET
NO SCALE

NOTES

1. PREPARE BEDDING: BEDDING MATERIAL AROUND THE END SECTION MAY BE THE SAME AS THE MATERIAL AROUND THE PIPE. PLACE A FEW INCHES OF BEDDING MATERIAL IN THE TRENCH OR DITCH WHERE THE END SECTION WILL BE PLACED. COMPACT AND CONTOUR THIS MATERIAL TO GENERALLY MATCH THE END SECTION: EXCAVATE AN AREA IN THE BEDDING WHERE THE TOE TROUGH WILL SEAT SO THAT THE END SECTION WILL ALIGN TO PROPER GRADE IN THE FINISHED INSTALLATION.

2. PLACE END SECTION ON PIPE. OPEN THE END SECTION COLLAR AND SEAT IT OVER THE LAST TWO PIPE CORRUGATIONS. ONCE THE END SECTION IS POSITIONED. CHECK TO MAKE SURE THE INVERT OF THE END SECTION MATCHES THE INVERT OF THE PIPE AND THAT THE END SECTION IS ALIGNED TO THE PROPER GRADE.

3. SECURE THE END SECTION: SLIP THE STAINLESS STEEL ROD THROUGH THE PRE–DRILLED HOLES AT THE TOP OF THE COLLAR. THE ROD SHOULD BE BETWEEN THE CROWNS OF THE TWO CORRUGATIONS AT THE END OF THE PIPE. PLACE A WASHER ON EITHER END OF THE ROD: PLACE A NUT ON EITHER END OF THE ROD AND HAND TIGHTEN WITH A WRENCH UNTIL THE COLLAR IS TIGHT AROUND THE PIPE. DO NOT OVER–TIGHTEN.

4. SECURE TOE TROUGH: TO PREVENT WASHOUTS FROM HIGH VELOCITY FLOW. IT IS RECOMMENDED THAT THE TOE TROUGH BE SECURED WITH CONCRETE. POUR CONCRETE IN THE TROUGH UP TO THE LEVEL OF THE TRENCH OR DITCH BOTTOM AND ALONG THE ENTIRE LENGTH OF THE TROUGH.

5. FINISH BACKFILL: SHOVEL BACKFILL AROUND THE END SECTION IN 6–TO 9–INCH LAYERS EQUALLY ON BOTH SIDES. KNIFING IT IN TO ELIMINATE VOIDS. TAMP WITH A SMALL–FACED COMPACTOR OR OTHER EQUIPMENT SUITABLE FOR SMALL AREAS. CONTINUE PLACING, KNIFING AND COMPACTING BACKFILL MATERIAL IN LAYERS TO THE TOP OF THE END SECTION TO SEAT IT WELL INTO THE BACKFILL.

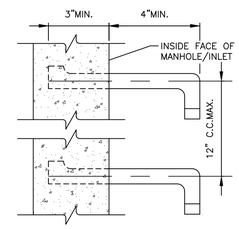

NOTES:
1. STEPS TO BE POLYPROPYLENE PLASTIC COATED 1/2" DIAMETER GRADE 60 STEEL.

2.DISTANCE FROM RIM OF MANHOLE/ INLET TO TOP STEP SHALL NOT BE GREATER THAN 2 FT.

3. DISTANCE FROM BOTTOM STEP TO FLOOR OF MANHOLE/INLET SHALL NOT BE GREATER THAN 2 FT.

4. EMBEDDED PORTION OF STEP TO BE COATED WITH ASPHALT CON– FORMING TO AASHO TM–190.

5. CONSTRUCT MANHOLES/INLETS THAT EXCEED 4 FT. IN HEIGHT WITH STEPS AS SHOWN IN THIS DETAIL.

MANHOLE/INLET STEP DETAIL
NO SCALE

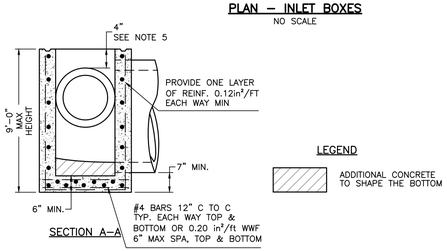

SECTION A–A

LEGEND

ADDITIONAL CONCRETE TO SHAPE THE BOTTOM

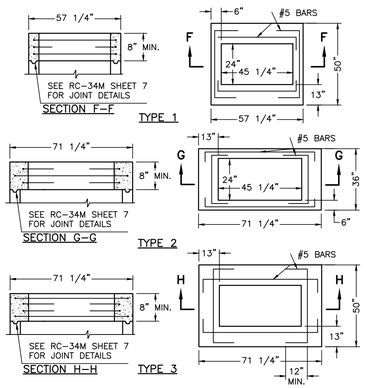

COVER ADJUSTMENT SLABS
NO SCALE

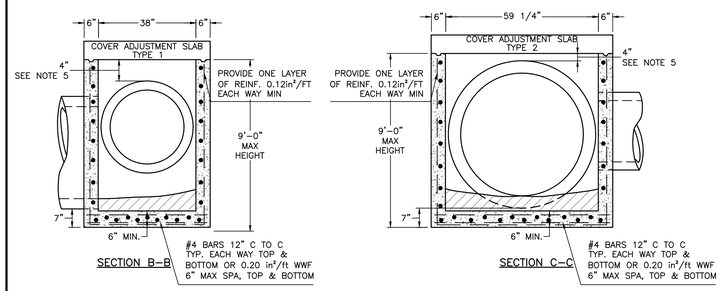

PRECAST CONCRETE INLET BOXES
(SEE PENNDOT RC–45M, LATEST EDITION FOR ADDITIONAL DETAILS)

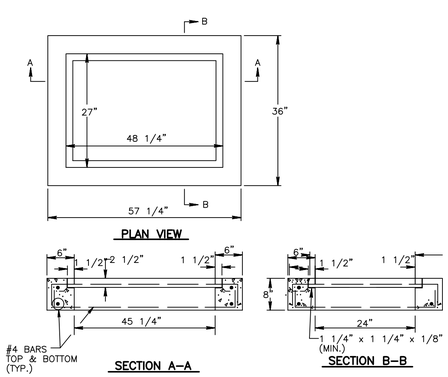

TYPE M TOP UNIT
(SEE PENNDOT RC–45M, LATEST EDITION FOR ADDITIONAL DETAILS)
NO SCALE

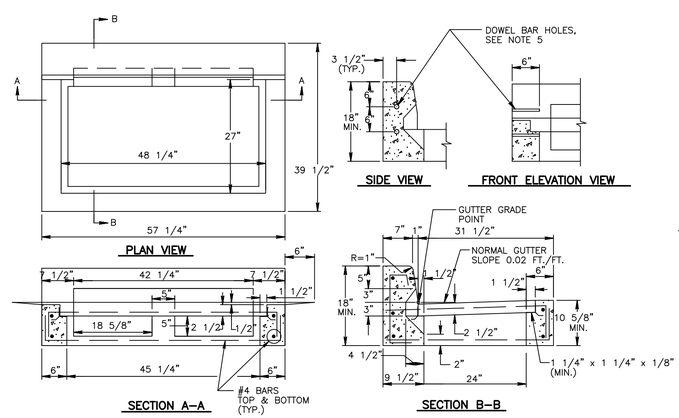

TYPE C TOP UNIT
(SEE PENNDOT RC–45M, LATEST EDITION FOR ADDITIONAL DETAILS)
NO SCALE

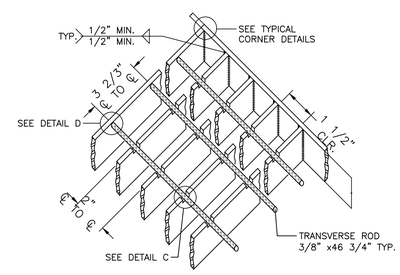

BAR AND ROD SPACER DETAIL
NO SCALE

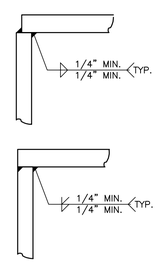

TYPICAL CORNER DETAILS
NO SCALE

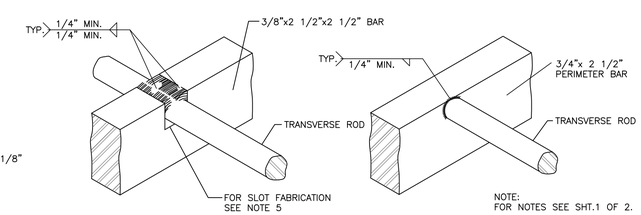

DETAIL C
NO SCALE

DETAIL D
NO SCALE

NOTES

1. THESE DETAILS DEPICTS THE DIMENSIONS REQUIRED FOR UNIFORMITY AND INTERCHANGEABILITY. IT DOES NOT INCLUDE DETAILS REQUIRED FOR FABRICATION OR MANUFACTURING. FOR DEVIATIONS OR MODIFICATIONS OF THE STANDARDS SUBMIT SHOP DRAWING FOR APPROVAL.
2. WELD STRUCTURAL STEEL GRATES IN ACCORDANCE WITH THE REQUIREMENTS OF PUBLICATION 408, SECTION 1105.
3. PROVIDE TRANSVERSE BARS MEETING THE REQUIREMENTS OF PUBLICATION 408. PROVIDE GRADE 345 (GRADE 50) STRUCTURAL STEEL FOR ALL PERIMETER AND BEARING BARS.
4. PROVIDE BICYCLE–SAFE, STRUCTURAL STEEL OR CAST IRON VANE GRATES FOR INSTALLATION WHERE BICYCLE TRAFFIC IS ANTICIPATED, SUCH AS CURBED ROADWAYS IN URBAN AREAS OR ROADWAYS SPECIFICALLY ESTABLISHED AND SIGNED AS BIKEWAYS OR HAVING BIKE LANES. ALTERNATE BICYCLE–SAFE GRATE DESIGNS REQUIRE A SHOP DRAWING SUBMISSION, AS SPECIFIED IN NOTE 1, AND MUST CONFORM TO THE DIMENSIONAL REQUIREMENTS FOR PROPER INSTALLATION WITH THE CURRENT CONCRETE TOP UNITS.
5. FABRICATE SLOTS BY BURNING, DRILLING, SHEARING OR PUNCHING. HAVE THE BOTTOM OF ALL BURNED OR DRILLED SLOTS CONFORM TO THE SHAPE OF THE ROD.
6. PROVIDE STRUCTURAL STEEL GRATES WITH THE GRATE SPACERS LOCATED FLUSH ALONG THE TOP SURFACE OF THE GRATE.
7. PROVIDE A 1" WIDE YELLOW PAINT STRIP LENGTHWISE ALONG THE TOP OF THE INLET GRATE AS A FIELD IDENTIFIER OF CONFORMANCE TO THESE DETAILS. FOR PERMANENT IDENTIFICATION PLACE TWO RAISED WELD BEADS, EACH TWO INCHES LONG, ON THE CENTER TOP OF ONE LONGITUDINAL PERIMETER BAR.

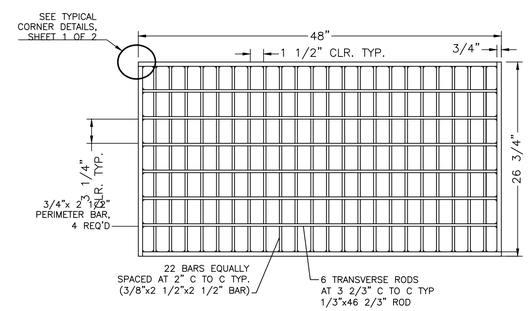

STRUCTURAL STEEL GRATE
BICYCLE SAFE
NO SCALE

© COPYRIGHT BURSICH ASSOCIATES, INC. 2018
THE PLANS, SPECIFICATIONS, REPORTS, PROGRAMS, PLAN NOTES AND OTHER DOCUMENTS AND INSTRUMENTS PREPARED BY BURSICH ASSOCIATES, INC. AS INSTRUMENTS OF SERVICE SHALL REMAIN THE PROPERTY OF BURSICH ASSOCIATES, INC. AND THEREFORE SHALL RETAIN ALL COMMON LAW, STATUTORY AND OTHER RESERVED RIGHTS, INCLUDING THE COPYRIGHT. THE USE AND/OR REUSE OF THE DOCUMENTS AND INSTRUMENTS WITHOUT THE EXPRESS WRITTEN CONSENT OF BURSICH ASSOCIATES, INC. IS STRICTLY PROHIBITED. ANY USE, REUSE OR MODIFICATION BY THIRD PARTIES WITHOUT WRITTEN CONSENT OF BURSICH ASSOCIATES, INC. IS AT THE USER AND BURSICH ASSOCIATES, INC. WHICH SHALL INDEMNIFY AND SAVE HARMLESS BURSICH ASSOCIATES, INC. FOR ALL CLAIMS, DAMAGES, LOSSES AND EXPENSES ARISING FROM THE USE THEREFROM.

NO.	REVISION	DATE	BY
2	REVISED PER TOWNSHIP REVIEW LETTER DATED 12/11/18	1/30/19	BG
1	REVISED PER TOWNSHIP REVIEW LETTERS DATED 9/13/18 & 10/26/18	11/5/18	BG

SEAL

NORTH

MANAGER NF	
DESIGN KK	CHKD. BY
DRAFT BG	CHKD. BY
FILE ROU–01	DATE 8/9/2018
NOTES	SCALE NTS

BURSICH
Sharing your Vision

Corporate Headquarters
2129 East High Street
Pottstown, PA 19464
610–323–4040

Southampton Office
706 Lakeside Drive
Southampton, PA 18966

www.bursich.com

CLIENT
ROUSE/CHAMBERLIN, LTD
500 EXTON COMMONS
EXTON, PA 19341

SUBJECT
POST CONSTRUCTION STORMWATER MANAGEMENT DETAILS

PRESERVE AT WILLISTOWN

WILLISTOWN TOWNSHIP, CHESTER COUNTY, PENNSYLVANIA

JOB NO. 187872

SHEET NO. 2 OF 5

DWG. NO. PC287872

P:\ROU–01\187872–00\dwg\LD_Plan\PC187872.dwg

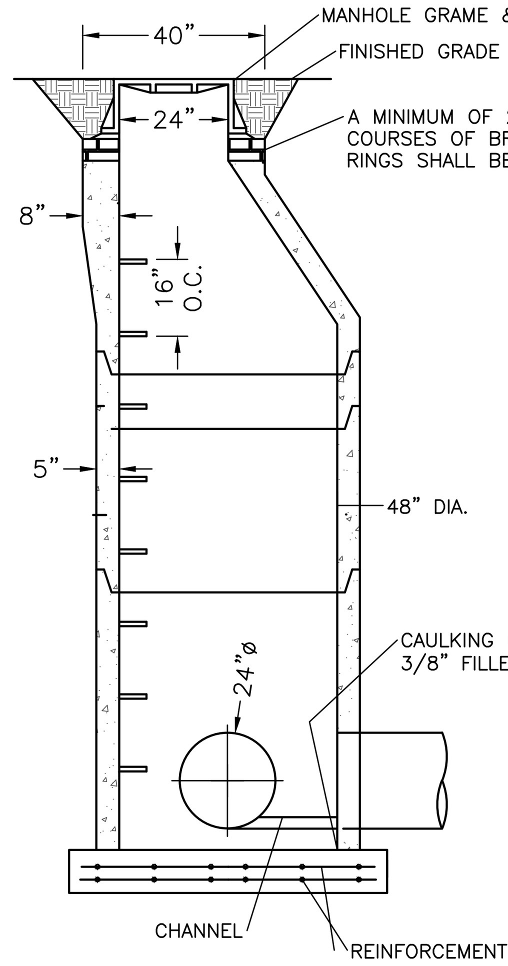

NOTES:

1. MANHOLE FRAME SHALL BE SET IN A BED OF MORTAR SO THAT THE TOP OF THE FRAME CONFORMS WITH THE SLOPE OF PAVED STREET SURFACE.
2 MANHOLE SECTIONS SHALL BE TONGUE & GROOVE WITH APPROVED RUBBER RING GASKET.
3. AFTER MANHOLE IS SET THE ENTIRE OUTER SURFACE SHALL BE COATED WITH BITUMASTIC, EXCEPT STORM SEWERS.
4. IF PRE-CAST BASE IS USED PROVIDE A MINIMUM OF 4" #2B STONE BASE TO LEVEL.
5. BASE REINFORCMENT:
   TOP H=12'-30', #5 @ 12" OR .18SI/FT. WWF
   H=30'-60', #6 @ 12" OR .22SI/FT. WWF
   BOTTOM H=12'-60', #4 @ 12" OR .28SI/FT. WWF

STORMWATER MANHOLE DETAIL

NO SCALE

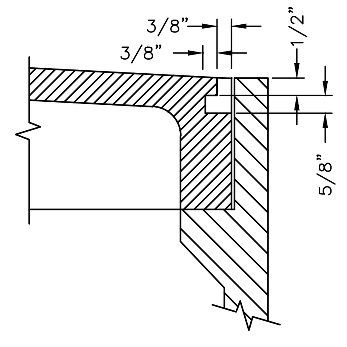

PICK HOLE DETAIL

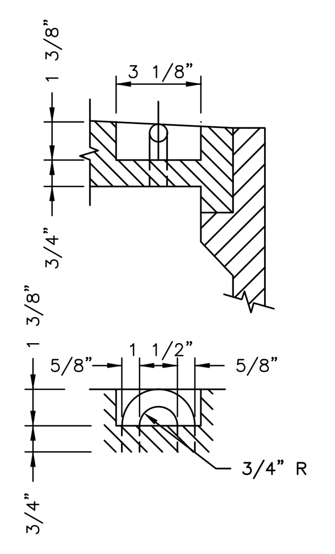

LIFTING RING DETAIL

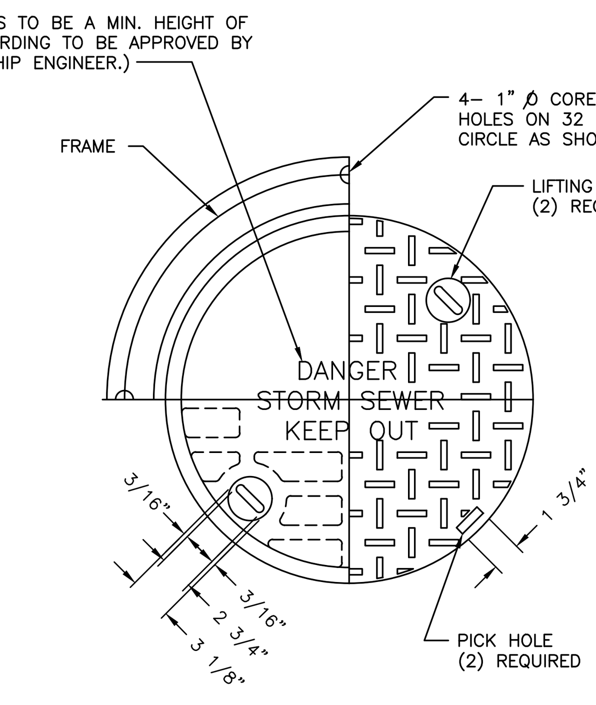

PLAN

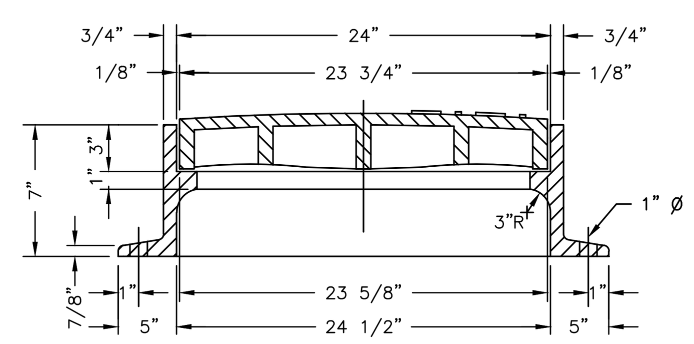

SECTION

CAST IRON MANHOLE FRAME AND COVER DETAIL

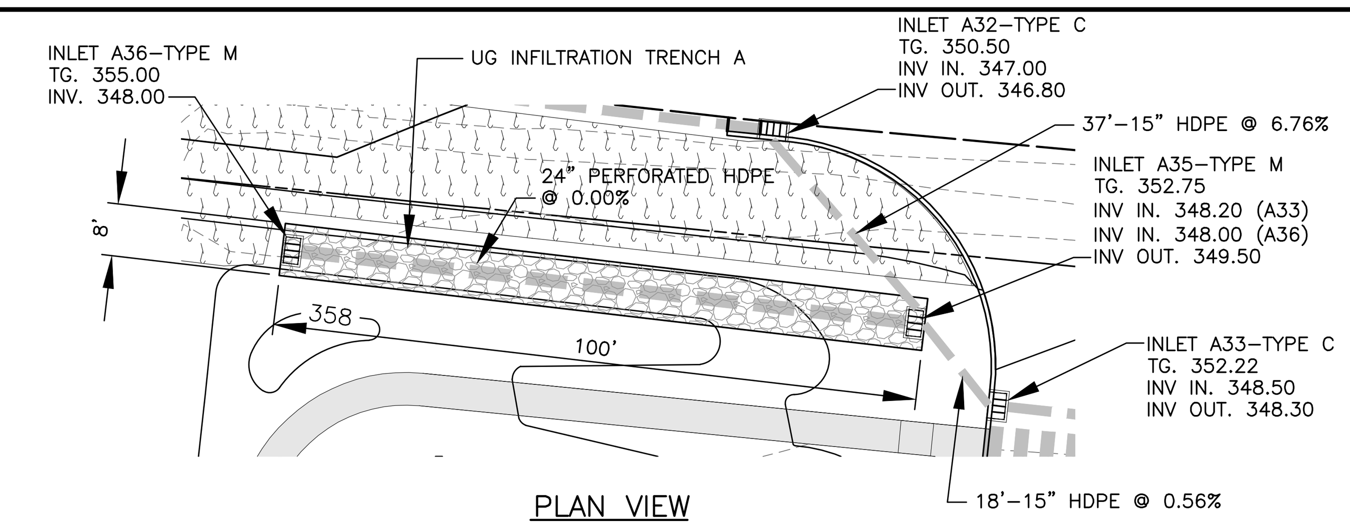

PLAN VIEW

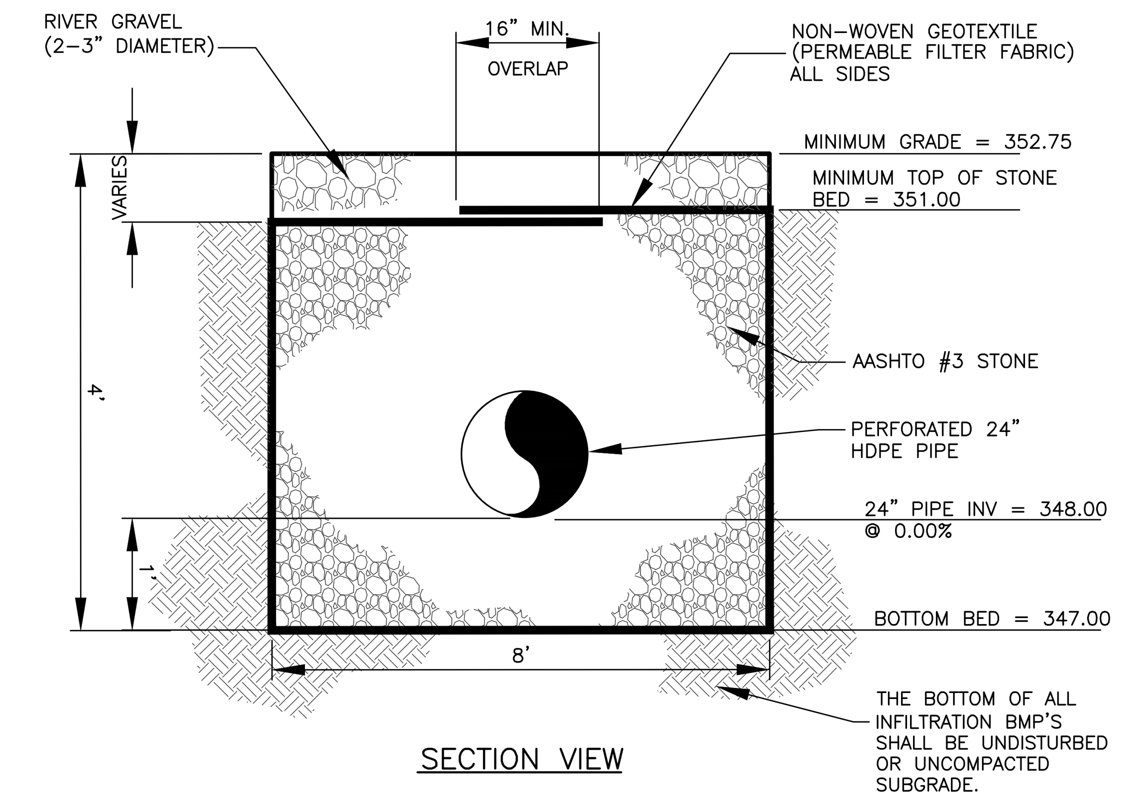

SECTION VIEW

STONE TRENCH NOTES:

1. INFILTRATION BMP FILTER FABRIC AND STONE SHOULD BE KEPT CLEAN OF SOIL/SEDIMENT DURING THE INSTALLATION PROCESS. IF INSPECTION INDICATES THAT SOIL SEDIMENT HAS ENTERED ANY OF THE INFILTRATION SEEPAGE BEDS, APPROPRIATE MEASURES (I.E. CLEANING THE SOIL/SEDIMENT FROM THE FABRIC, STONE, BED ETC. OR REPLACEMENT OF THE FABRIC OR STONE) SHOULD BE ADDRESSED.
2. EXCAVATION FOR THE FACILITY SHALL BE PERFORMED WITH EQUIPMENT WHICH WILL NOT COMPACT THE BOTTOM OF THE SEEPAGE BED/TRENCH, OR LIKE FACILITY.
3. THE BOTTOM OF THE BED AND/OR TRENCH SHALL BE SCARIFIED PRIOR TO THE PLACEMENT OF AGGREGATE.
4. ONLY CLEAN AGGREGATE, FREE OF FINES SHALL BE ALLOWED.
5. THE TOP AND SIDES OF ALL SEEPAGE BEDS, TRENCHES, OR LIKE FACILITIES SHALL BE COVERED WITH DRAINAGE FILTRATION FABRIC. FABRIC SHALL MEET THE SPECIFICATIONS OF PENNDOT PUBLICATION 408, SECTION 735, CONSTRUCTION CLASS 1.

UNDERGROUND INFILTRATION TRENCH A

STANDARD WORKSHEET #21
Temporary and Permanent Vegetative Stabilization Specifications

PROJECT NAME: 1720 W. CHESTER PIKE
LOCATION: WILLISTOWN TWP., CHESTER COUNTY, PA
PREPARED BY: JJ DATE: AUGUST 6, 2018
CHECKED BY: DATE:

SPECIFICATIONS: The Department recommends the use of the Penn State publication "Erosion Control & Conservation Plantings on Noncropland" as the standard to use for the selection of species, seed specifications, mixtures, liming and fertilizing, time of seeding, and seeding methods. Specifications for these items may also be obtained from Penn DOT's Publication # 408, Section 804 or by contacting the applicable county conservation district. Upon selection of a reference, that reference should be used to provide all specifications for seeding, mulching, and soil amendments. The following specification will be used for this project:

(TEMPORARY)
*SPECIES: ANNUAL RYEGRASS
% PURE LIVE SEED: 88.20 %
APPLICATION RATE: 48.4 LB./ACRE
FERTILIZER TYPE: 10-10-10 (X-X-X)
FERTILIZER APPL. RATE: 500 LB./ACRE
LIMING RATE: 1 T./ACRE
MULCH TYPE: STRAW OR HAY
MULCHING RATE: 3 T./ACRE

(PERMANENT)
TOPSOIL PLACEMENT DEPTH: 4-8 IN.
*SPECIES: PERENNIAL RYEGRASS MIXTURE/CREEPING FESCUE OR CHEWINGS FESCUE/KENTUCKY BLUEGRASS MIXTURE
% PURE LIVE SEED: 88.2/83.3/78.4 %
APPLICATION RATE 19.4/29.0/53.2 LB./ACRE
FERTILIZER TYPE: 10-10-20 (X-X-X)
FERTILIZER APPL. RATE: 1000 LB./ACRE
LIMING RATE: 6 T./ACRE
MULCH TYPE: STRAW OR HAY
MULCHING RATE: 3 T./ACRE
ANCHOR MATERIAL: CELLULOSE FIBER
ANCHORING METHOD: SPRAYED
RATE OF ANCHOR MATERIAL APPL.: 1800 LB./ACRE
SEEDING SEASON DATES: (MARCH 15-JUNE 1) & (AUGUST 1-OCTOBER 15)

(PERMANENT – STEEP SLOPE)
TOPSOIL PLACEMENT DEPTH: 4-8 IN.
*SPECIES: TALL FESCUE/CREEPING FESCUE OR CHEWINGS FESCUE/ANNUAL RYEGRASS
% PURE LIVE SEED: 83.3/83.3/88.2 %
APPLICATION RATE: 61.0/30.5/10.2 LB./ACRE
FERTILIZER TYPE: 10-10-20 (X-X-X)
FERTILIZER APPL. RATE: 1000 LB./ACRE
LIMING RATE: 6 T./ACRE
MULCH TYPE: STRAW OR HAY
MULCHING RATE: 3 T./ACRE
ANCHOR MATERIAL: CELLULOSE FIBER
ANCHORING METHOD: SPRAYED
RATE OF ANCHOR MATERIAL APPL.: 2000 LB./ACRE
SEEDING SEASON DATES: (FESCUE (MARCH 15-JUNE 1) & (AUGUST 1-OCTOBER 15)) (RYE-3/1 - 10/15)

*If more than one species is used, indicate application rate for each species.
Note: This worksheet should be added to the plan drawings.

NOTES:

AREAS WHICH ARE TO BE TOPSOILED SHALL BE SCARIFIED TO A MINIMUM DEPTH OF 3 TO 5 INCHES (6 TO 12 INCHES ON COMPACTED SOILS) PRIOR TO PLACEMENT OF TOPSOIL. AREAS TO BE VEGETATED SHALL HAVE A MINIMUM OF 4 INCHES OF TOPSOIL IN PLACE PRIOR TO SEEDING AND MULCHING.
2. IMMEDIATELY AFTER EARTH DISTURBANCE ACTIVITIES CEASE, THE OPERATOR SHALL STABILIZE ANY AREAS DISTURBED BY THE ACTIVITIES. DURING NON-GERMINATING PERIODS, MULCH MUST BE APPLIED AT THE SPECIFIED RATES. DISTURBED AREAS WHICH ARE NOT AT FINISHED GRADE AND WHICH WILL BE RE-DISTURBED WITHIN 1 YEAR MUST BE STABILIZED IN ACCORDANCE WITH THE TEMPORARY VEGETATIVE STABILIZATION SPECIFICATIONS. DISTURBED AREAS WHICH ARE AT FINISHED GRADE OR WHICH WILL NOT BE RE-DISTURBED WITHIN 1 YEAR MUST BE STABILIZED IN ACCORDANCE WITH THE PERMANENT VEGETATIVE STABILIZATION SPECIFICATIONS.
3. UPON COMPLETION OR TEMPORARY CESSATION OF THE EARTH DISTURBANCE ACTIVITY THAT WILL EXCEED 4 DAYS, OR ANY STAGE THEREOF, THE PROJECT SITE SHALL BE IMMEDIATELY STABILIZED WITH THE APPROPRIATE TEMPORARY OR PERMANENT STABILIZATION.
4. SOIL TESTING SHOULD BE COMPLETED PRIOR TO SEEDING AND MULCHING TO DETERMINE THE PROPER SOIL AMENDMENTS AND APPLICATION RATES FOR THE PROPOSED SEED MIXTURES, IF SOIL TESTS ARE NOT COMPLETED SOIL AMENDMENTS SHOULD BE ADDED AT THE RATES SPECIFIED BY THE SELECTED SEEDING REFERENCE ABOVE.
5. STRAW OR HAY MULCH SHOULD BE ANCHORED OR TACKIFIED IMMEDIATELY AFTER APPLICATION TO PREVENT BEING WINDBLOWN. A TRACTOR DRAWN IMPLEMENT MAY BE USED TO "CRIMP" THE STRAW OR HAY INTO THE SOIL, ABOUT 3 INCHES. THIS METHOD SHOULD BE LIMITED TO SLOPES NO STEEPER THAN 3H:1V. THE MACHINERY SHOULD BE OPERATED ON THE CONTOUR.
NO MORE THAN 15,000 SQUARE FEET OF DISTURBED AREA AT FINAL GRADE SHOULD BE LEFT WITHOUT SEEDING AND MULCHING.

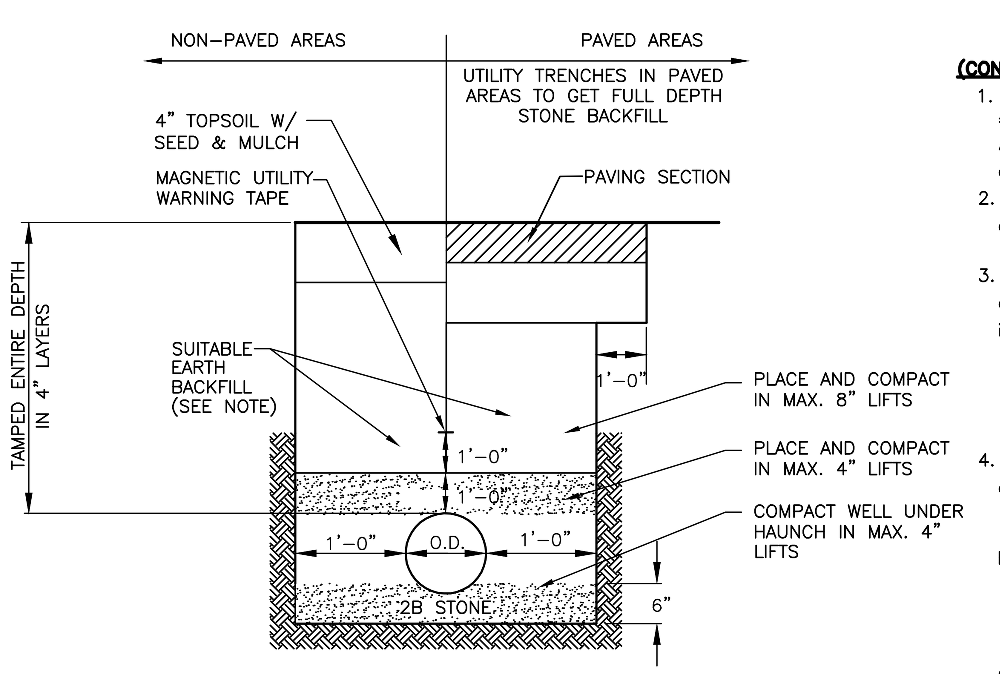

NOTE:
COMPACTED 2A STONE BACKFILL FOR PIPES INSTALLED IN PAVED AREAS OR FIELD VERIFIED MONITORING AND COMPACTION CERTIFICATION WILL NEED TO BE PROVIDED BY THE DEVELOPER'S GEOTECHNICAL ENGINEER.

STORM SEWER TRENCH DETAIL

NO SCALE

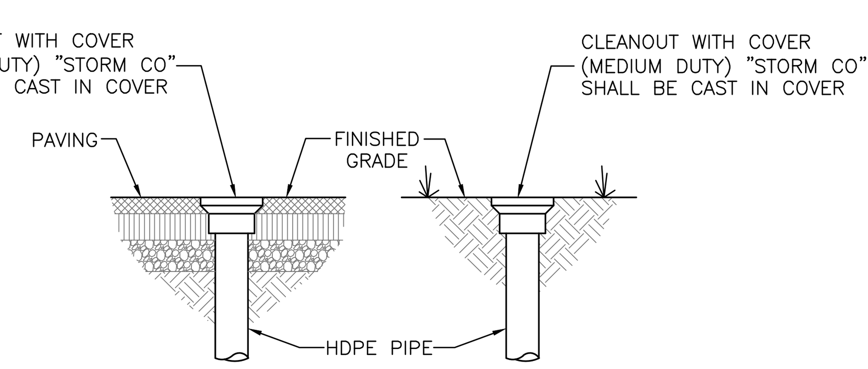

PAVED AREA LAWN AREA

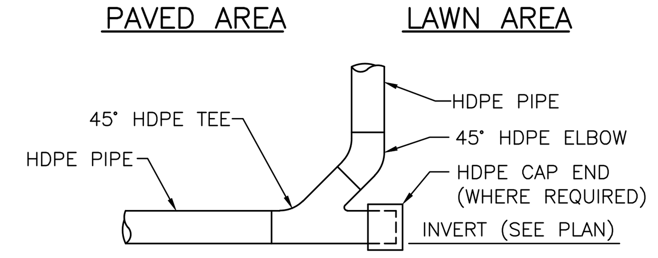

STORM CLEANOUT DETAIL

(CONSTRUCTION SEQUENCE) SOIL AMENDMENT & RESTORATION

1. CONSTRUCTION SEQUENCE
   **CRITICAL STAGE – A DESIGNATED REPRESENTATIVE SHALL BE PRESENT TO ENSURE THAT THE SOIL AMENDMENTS ARE PLACED AT THE LOCATIONS AND PER THE SPECIFICATIONS AS NOTED.
   a. ALL CONSTRUCTION SHOULD BE COMPLETED AND STABILIZED BEFORE BEGINNING SOIL RESTORATION.
2. MAINTENANCE ISSUES
   a. THE SOIL RESTORATION PROCESS MAY NEED TO BE REPEATED OVER TIME, DUE TO COMPACTION BY USE AND/OR SETTLING.
3. SPECIFICATIONS
   a. SCOPE
   i. THIS SPECIFICATION COVERS THE USE OF COMPOST FOR SOIL AMENDMENT AND THE MECHANICAL RESTORATION OF COMPACTED, ERODED AND NON-VEGETATED SOILS. SOIL AMENDMENT AND RESTORATION IS NECESSARY WHERE EXISTING SOIL HAS BEEN DEEMED UNHEALTHY IN ORDER TO RESTORE SOIL STRUCTURE AND FUNCTION, INCREASE INFILTRATION POTENTIAL AND SUPPORT HEALTHY VEGETATIVE COMMUNITIES. SOIL AMENDMENT PREVENTS AND CONTROLS EROSION BY ENHANCING THE SOIL SURFACE TO PREVENT THE INITIAL DETACHMENT AND TRANSPORT OF SOIL PARTICLES.
4. COMPOST MATERIALS
   a. COMPOST PRODUCTS SPECIFIED FOR USE IN THIS APPLICATION ARE DESCRIBED IN TABLE 1. THE PRODUCT'S PARAMETERS WILL VARY BASED ON WHETHER VEGETATION WILL BE ESTABLISHED ON THE TREATED SLOPE.
   b. ONLY COMPOST PRODUCTS THAT MEET ALL APPLICABLE STATE AND FEDERAL REGULATIONS PERTAINING TO ITS PRODUCTION AND DISTRIBUTION MAY BE USED IN THIS APPLICATION. APPROVED COMPOST PRODUCTS MUST MEET RELATED STATE AND FEDERAL CHEMICAL CONTAMINANT (E.G., HEAVY METALS, PESTICIDES, ETC.) AND PATHOGEN LIMIT STANDARDS PERTAINING TO THE FEEDSTOCKS (SOURCE MATERIALS) IN WHICH IT IS DERIVED.
   c. VERY COARSE COMPOST SHOULD BE AVOIDED FOR SOIL AMENDMENT AS IT WILL MAKE PLANTING AND CROP ESTABLISHMENT MORE DIFFICULT. SPECIFYING THE USE OF COMPOST PRODUCTS THAT ARE CERTIFIED BY THE U.S. COMPOSTING COUNCIL'S SEAL OF TESTING (STA) PROGRAM (WWW.COMPOSTINGCOUNCIL.ORG) WILL ALLOW FOR THE ACQUISITION OF PRODUCTS THAT ARE ANALYZED ON A ROUTINE BASIS, USING THE SPECIFIED TEST METHODS. STA PARTICIPANTS ARE ALSO REQUIRED TO PROVIDE A STANDARD PRODUCT LABEL TO ALL CUSTOMERS, ALLOWING EASY COMPARISON TO OTHER PRODUCTS.
5. SUB-SOILING TO RELIEVE COMPACTION
   a. BEFORE THE TIME THE COMPOST IS PLACED AND PREFERABLY WHEN EXCAVATION IS COMPLETED, THE SUBSOIL SHALL BE IN A LOOSE, FRIABLE CONDITION TO A DEPTH OF 20 INCHES BELOW FINAL TOPSOIL GRADE AND THERE SHALL BE NO EROSION RILLS OR WASHOUTS IN THE SUBSOIL SURFACE EXCEEDING 3 INCHES IN DEPTH.
   b. TO ACHIEVE THIS CONDITION, SUBSOILING, RIPPING, OR SCARIFICATION OF THE SUBSOIL WILL BE REQUIRED AS DIRECTED BY THE OWNER'S REPRESENTATIVE, WHEREVER THE SUBSOIL HAS BEEN COMPACTED BY EQUIPMENT OPERATION OR HAS BECOME DRIED OUT AND CRUSTED, AND WHERE NECESSARY TO OBLITERATE EROSION RILLS. SUB-SOILING SHALL BE REQUIRED TO REDUCE SOIL COMPACTION IN ALL AREAS WHERE PLANT ESTABLISHMENT IS PLANNED. SUB-SOILING SHALL BE PERFORMED BY THE PRIME OR EXCAVATING CONTRACTOR AND SHALL OCCUR BEFORE COMPOST PLACEMENT.
   c. SUBSOILED AREAS SHALL BE LOOSENED TO LESS THAN 1400 KPA (200 PSI) TO A DEPTH OF 20 INCHES BELOW FINAL TOPSOIL GRADE. WHEN DIRECTED BY THE OWNER'S REPRESENTATIVE, THE CONTRACTOR SHALL VERIFY THAT THE SUB-SOILING WORK CONFORMS TO THE SPECIFIED DEPTH.
   d. SUB-SOILING SHALL FORM A TWO-DIRECTIONAL GRID. CHANNELS SHALL BE CREATED BY A COMMERCIALLY AVAILABLE, MULTI-SHANKED, PARALLELOGRAM IMPLEMENT (SOLID SHANK RIPPER). THE EQUIPMENT SHALL BE CAPABLE OF EXERTING A PENETRATION FORCE NECESSARY FOR THE SITE. NO DISC CULTIVATORS CHISEL PLOWS, OR SPRING-LOADED EQUIPMENT WILL BE ALLOWED. THE GRID CHANNELS SHALL BE SPACED A MINIMUM OF 12 INCHES TO A MAXIMUM OF 36 INCHES APART, DEPENDING ON EQUIPMENT, SITE CONDITIONS, AND THE SOIL MANAGEMENT PLAN. THE CHANNEL DEPTH SHALL BE A MINIMUM OF 20 INCHES. IF SOILS ARE SATURATED, THE CONTRACTOR SHALL DELAY OPERATIONS UNTIL THE SOIL WILL NOT HOLD A BALL WHEN SQUEEZED. ONLY ONE PASS SHALL BE PERFORMED ON ERODIBLE SLOPES GREATER THAN 1 VERTICAL TO 3 HORIZONTAL. WHEN ONLY ONE PASS IS USED, WORK SHOULD BE AT RIGHT ANGLES TO THE DIRECTION OF SURFACE DRAINAGE, WHENEVER PRACTICAL.
   e. EXCEPTIONS TO SUB-SOILING INCLUDE AREAS WITHIN THE DRIP LINE OF ANY EXISTING TREES, OVER UTILITY INSTALLATIONS WITHIN 30 INCHES OF THE SURFACE, WHERE TRENCHING/DRAINAGE LINES ARE INSTALLED, WHERE COMPACTION IS BY DESIGN (ABUTMENTS, FOOTINGS, OR IN SLOPES), AND ON INACCESSIBLE SLOPES, AS APPROVED BY THE OWNER'S REPRESENTATIVE. IN CASES WHERE EXCEPTIONS OCCUR, THE CONTRACTOR SHALL OBSERVE A MINIMUM SETBACK OF 20 FEET OR AS DIRECTED BY THE OWNER'S REPRESENTATIVE. ARCHEOLOGICAL CLEARANCES MAY BE REQUIRED IN SOME INSTANCES.
6. COMPOST SOIL AMENDMENT QUALITY
   a. THE FINAL, RESULTING COMPOST SOIL AMENDMENT MUST MEET ALL OF THE MANDATORY CRITERIA AS OUTLINED IN TABLE 4.
7. COMPOST SOIL AMENDMENT INSTALLATION
   a. SPREAD 2" INCHES OF APPROVED COMPOST, LEAF LITTER OR MANURE AND 4" OF APPROVED TOPSOIL ON EXISTING SOIL. TILL ADDED SOILS WITH A ROTARY TILLER THAT IS SET TO A DEPTH OF 6 INCHES.
   b. AFTER PERMANENT PLANTING/ SEEDING, 2"-3" INCHES OF COMPOST BLANKET WILL BE APPLIED TO ALL AREAS NOT PROTECTED BY GRASS OR OTHER PLANTS.

TABLE 1 (BMP 6.7.3 SOIL AMENDMENT & RESTORATION, PENNSYLVANIA STORMWATER BEST MANAGEMENT PRACTICES MANUAL, DECEMBER 2006)

SOIL TEXTURE	IDEAL BULK DENSITIES	BULK DENSITIES THAT MAY AFFECT ROOT GROWTH	BULK DENSITIES THAT RESTRICT ROOT GROWTH
	g/cm3	g/cm3	g/cm3
SANDS, LOAMY SANDS	<1.60	1.69	1.8
SANDY LOAMS, LOAMS	<1.40	1.63	1.8
SANDY CLAY LOAMS, LOAMS, CLAY LOAMS	<1.40	1.6	1.75
SILT, SILT LOAMS	<1.30	1.6	1.75
SILT LOAMS, SILTY CLAY LOAMS	<1.10	1.55	1.65
SANDY CLAYS, SILTY CLAYS, SOME CLAY LOAMS (35-45% CLAY)	<1.10	1.49	1.58
CLAYS (>45% CLAY)	<1.10	1.39	1.47

SOURCE: PROTECTING URBAN SOIL QUALITY, USDA-NRCS

TABLE 4 (BMP 6.7.3 SOIL AMENDMENT & RESTORATION, PENNSYLVANIA STORMWATER BEST MANAGEMENT PRACTICES MANUAL, DECEMBER 2006)

ADSORBED MASS OF NUTRIENTS AND METALS IN UNVEGETATED PLOT RUNOFF FROM 30-MINUTE, HIGH-INTENSITY (100-mm/hr) RAINSTORM

	COMPOST TREATMENTS			CONVENTIONAL TREATMENTS	
	BIOSOLIDS	YARDWASTE	BIOINDUSTRIAL COMPOST	COMPACTED SUBSOIL	TOPSOIL
ELEMENT	GEOMETRIC MEAN (mg)				
	MEDIUM	LOWEST	MEDIUM	HIGHEST	HIGHEST
CHROMIUM	0.01b	<0.01a	<0.01b	0.92c	0.75c
COPPER	0.02b	<0.01a	0.01b	1.03c	0.66c
NICKEL	<0.01b	<0.01a	<0.01b	0.96c	0.67c
LEAD	0.01b	<0.01a	<0.01b	1.82c	0.95c
ZINC	0.10b	<0.01a	0.03b	6.55c	3.99c
NITROGEN	0.47b	<0.01a	0.09a,b	266.65c	211.87c
PHOSPHORUS	0.45b	<0.01a	0.09a,b	36.47c	29.07c
POTASSIUM	0.17b	<0.01a	0.09a,b	103.94c	71.57c

MEANS WITHIN THE SAME ROW WITH DIFFERENT LETTER DESIGNATIONS ARE SIGNIFICANTLY DIFFERENT (p<0.05)

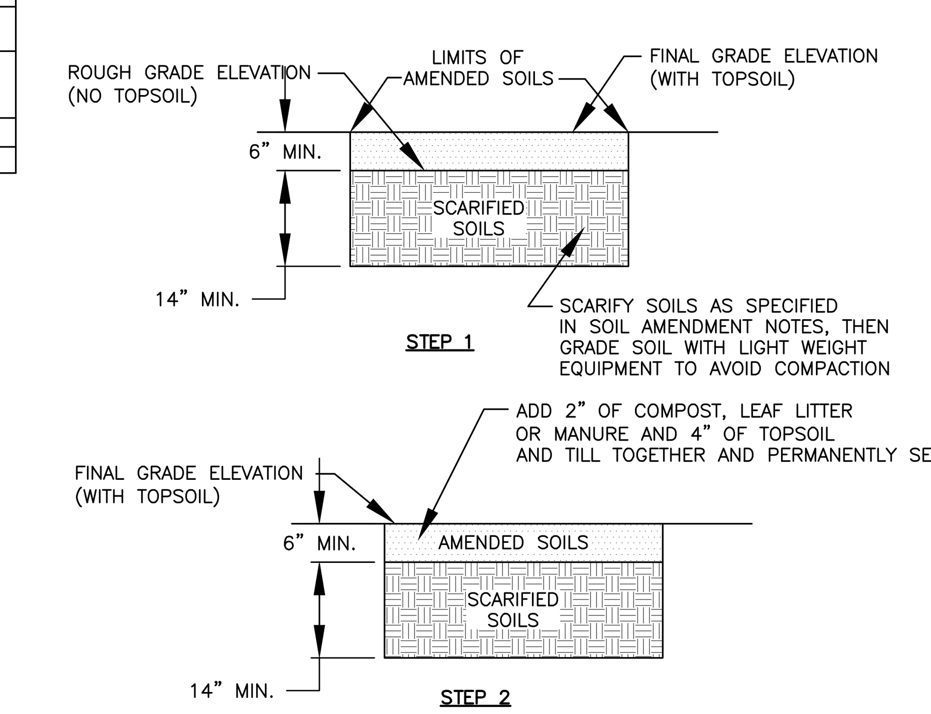

SOIL AMENDMENT INSTALLATION DETAIL

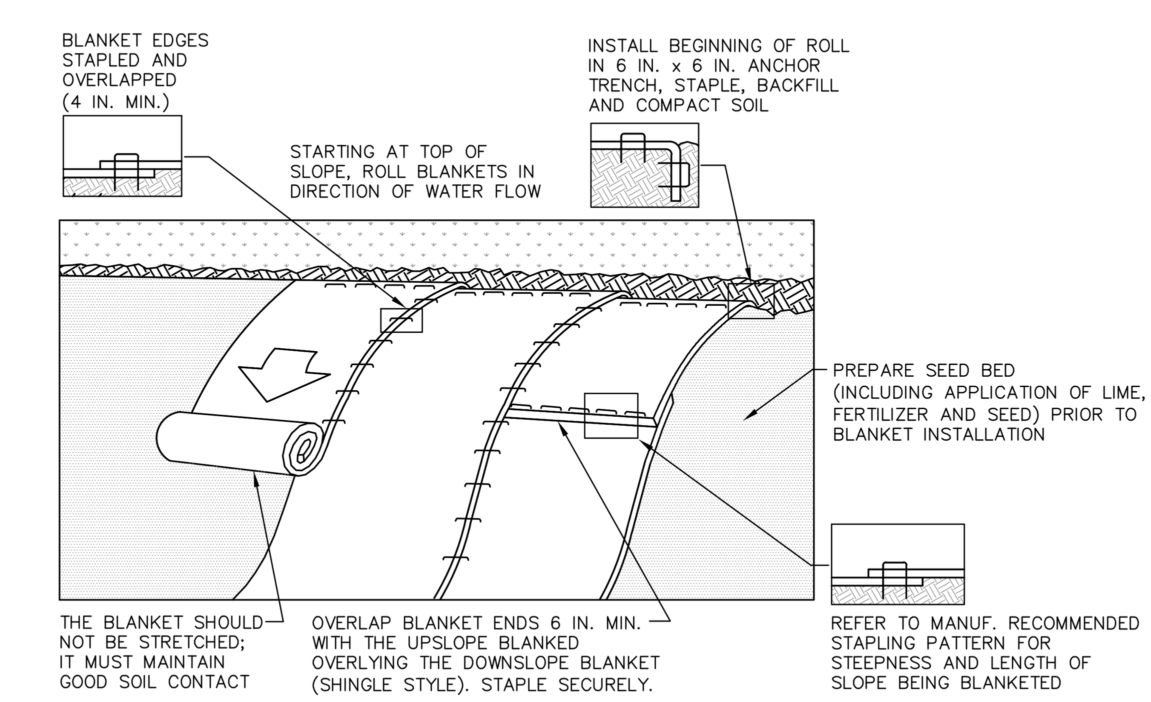

NOTES:

SEED AND SOIL AMENDMENTS SHALL BE APPLIED ACCORDING TO THE RATES IN THE PLAN DRAWINGS PRIOR TO INSTALLING THE BLANKET.

PROVIDE ANCHOR TRENCH AT TOE OF SLOPE IN SIMILAR FASHION AS AT TOP OF SLOPE.

SLOPE SURFACE SHALL BE FREE OF ROCKS, CLODS, STICKS, AND GRASS.

BLANKET SHALL HAVE GOOD CONTINUOUS CONTACT WITH UNDERLYING SOIL THROUGHOUT ENTIRE LENGTH. LAY BLANKET LOOSELY AND STAKE OR STAPLE TO MAINTAIN DIRECT CONTACT WITH SOIL. DO NOT STRETCH BLANKET.

THE BLANKET SHALL BE STAPLED IN ACCORDANCE WITH THE MANUFACTURER'S RECOMMENDATIONS.

BLANKETED AREAS SHALL BE INSPECTED WEEKLY AND AFTER EACH RUNOFF EVENT UNTIL PERENNIAL VEGETATION IS ESTABLISHED TO A MINIMUM UNIFORM 70% COVERAGE THROUGHOUT THE BLANKETED AREA. DAMAGED OR DISPLACED BLANKETS SHALL BE RESTORED OR REPLACED WITHIN 4 CALENDAR DAYS.

STANDARD CONSTRUCTION DETAIL #11-1
EROSION CONTROL BLANKET INSTALLATION

NOT TO SCALE

© COPYRIGHT BURSICH ASSOCIATES, INC. 2018
ALL REPORTS, DOCUMENTS, SPECIFICATIONS, COMPUTER FILES, FIELD DATA, NOTES AND OTHER DOCUMENTS AND INSTRUMENTS PREPARED BY BURSICH ASSOCIATES, INC. AS INSTRUMENTS OF SERVICE SHALL REMAIN THE PROPERTY OF BURSICH ASSOCIATES, INC. AND THEREFORE SHALL RETAIN ALL COMMON LAW, STATUTORY AND OTHER RESERVED RIGHTS, INCLUDING THE COPYRIGHT THERETO. ANY USE, REUSE OR MODIFICATION/ALTERATION AND REPRODUCTION WITHOUT THE EXPRESS WRITTEN CONSENT OF BURSICH ASSOCIATES, INC. IS STRICTLY PROHIBITED. ANY USE, REUSE OR MODIFICATION/ALTERATION BY ANYONE WITHOUT WRITTEN CONSENT SHALL BE DEEMED AN AGREEMENT BETWEEN THE USER AND BURSICH ASSOCIATES, INC. WHICH SHALL INDEMNIFY AND SAVE HARMLESS BURSICH ASSOCIATES, INC. FOR ALL CLAIMS, DAMAGES, LOSSES AND EXPENSES ARISING FROM THE USE THEREFROM.

NO.	REVISION	DATE	BY
2	REVISED PER TOWNSHIP REVIEW LETTER DATED 12/11/18	1/30/19	BG
1	REVISED PER TOWNSHIP REVIEW LETTERS DATED 9/13/18 & 10/26/18	11/5/18	BG

SEAL

NORTH

MANAGER NF	
DESIGN KK	CHKD. BY
DRAFT BG	CHKD. BY
FILE ROU-01	DATE 8/9/2018
NOTES	SCALE 1"=40'

BURSICH
Sharing your Vision

Corporate Headquarters
2129 East High Street
Pottstown, PA 19464
610-323-4040

Southampton Office
706 Lakeside Drive
Southampton, PA 18966

www.bursich.com

CLIENT
ROUSE/CHAMBERLIN, LTD
500 EXTON COMMONS
EXTON, PA 19341

SUBJECT
POST CONSTRUCTION STORMWATER MANAGEMENT DETAILS

PRESERVE AT WILLISTOWN

WILLISTOWN TOWNSHIP, CHESTER COUNTY, PENNSYLVANIA

JOB NO. 187872

SHEET NO. 3 OF 5

DWG. NO. PC387872

P:\ROU-01\187872-00\dwg\LD_Plan\PC187872.dwg

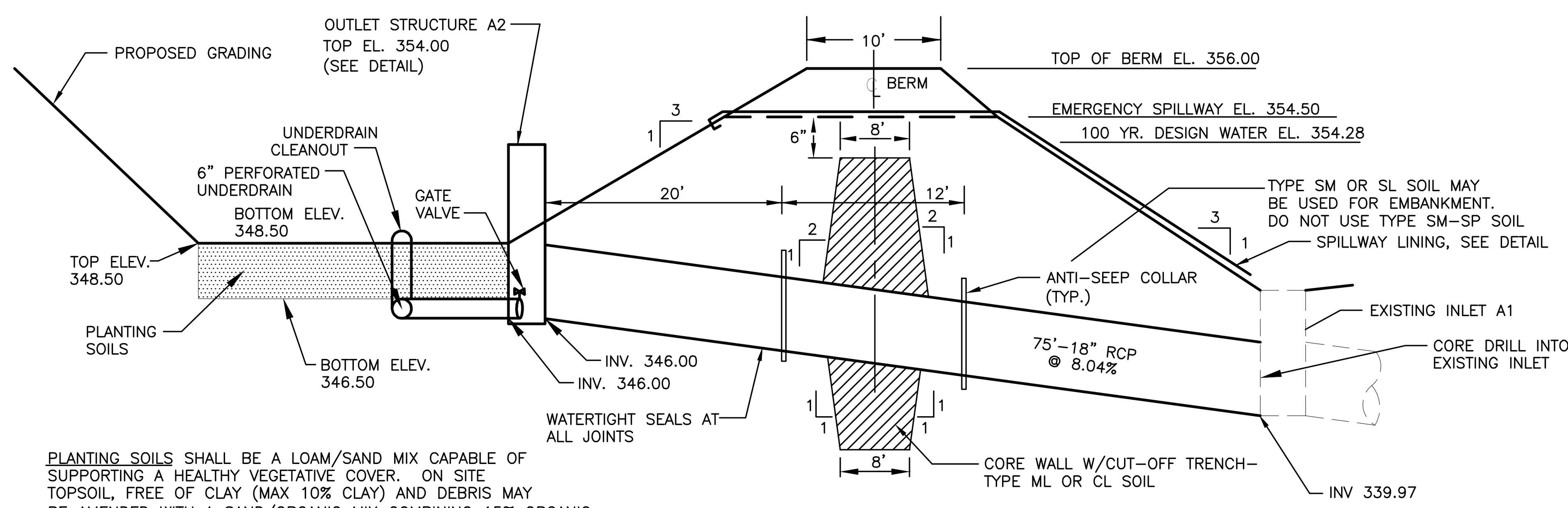

PLANTING SOILS SHALL BE A LOAM/SAND MIX CAPABLE OF SUPPORTING A HEALTHY VEGETATIVE COVER. ON SITE TOPSOIL, FREE OF CLAY (MAX 10% CLAY) AND DEBRIS MAY BE AMENDED WITH A SAND/ORGANIC MIX COMBINING 15% ORGANIC MATERIAL (COMPOST), AND 25% CONSTRUCTION (COARSE GRAINED) SAND.

NOTE: INSTALL PLANTING SOIL IN 18-INCHES MAXIMUM LIFTS AND LIGHTLY COMPACTED (TAMP WITH BACKHOE BUCKET OR BY HAND). DO NOT ALLOW EQUIPMENT MOVEMENT OVER PLANTING SOIL – DO NOT OVER COMPACT.

INFILTRATION BASIN A DETAIL

NO SCALE

CONSTRUCTION NOTES:

1. REMOVE ALL TOPSOIL OVER EMBANKMENT PRIOR TO PLACING FILL.
2. BASIN OUTLET PIPE SHALL BE CLASS III "O" RING RCP.
3. PLACE FILL IN 8" MAXIMUM LIFTS TO A MINIMUM 95% DRY DENSITY. PRIOR TO PROCEEDING TO THE NEXT LIFT, COMPACTION SHALL BE CHECKED BY THE TOWNSHIP ENGINEER OR AN APPROVED SOILS ENGINEER WHO SHALL PROVIDE THE TOWNSHIP ENGINEER WITH A WRITTEN REPORT. COMPACTION TESTS SHALL BE PERFORMED USING THE MODIFIED PROCTOR METHOD IN ACCORDANCE WITH ASTM D-1577. COMPACTION TESTS SHALL BE RUN ON THE LEADING AND TRAILING EDGE AS WELL AS THE TOP OF THE BERM.
4. FURNISH & PLACE 8" MINIMUM TOPSOIL, SOIL SUPPLEMENTS, FORMULA "B" SEED, MULCH, PER PENN DOT 408.
5. GATE VALVE SHALL REMAIN CLOSED AT ALL TIMES TO ALLOW WATER TO PERCOLATE INTO THE GROUND.

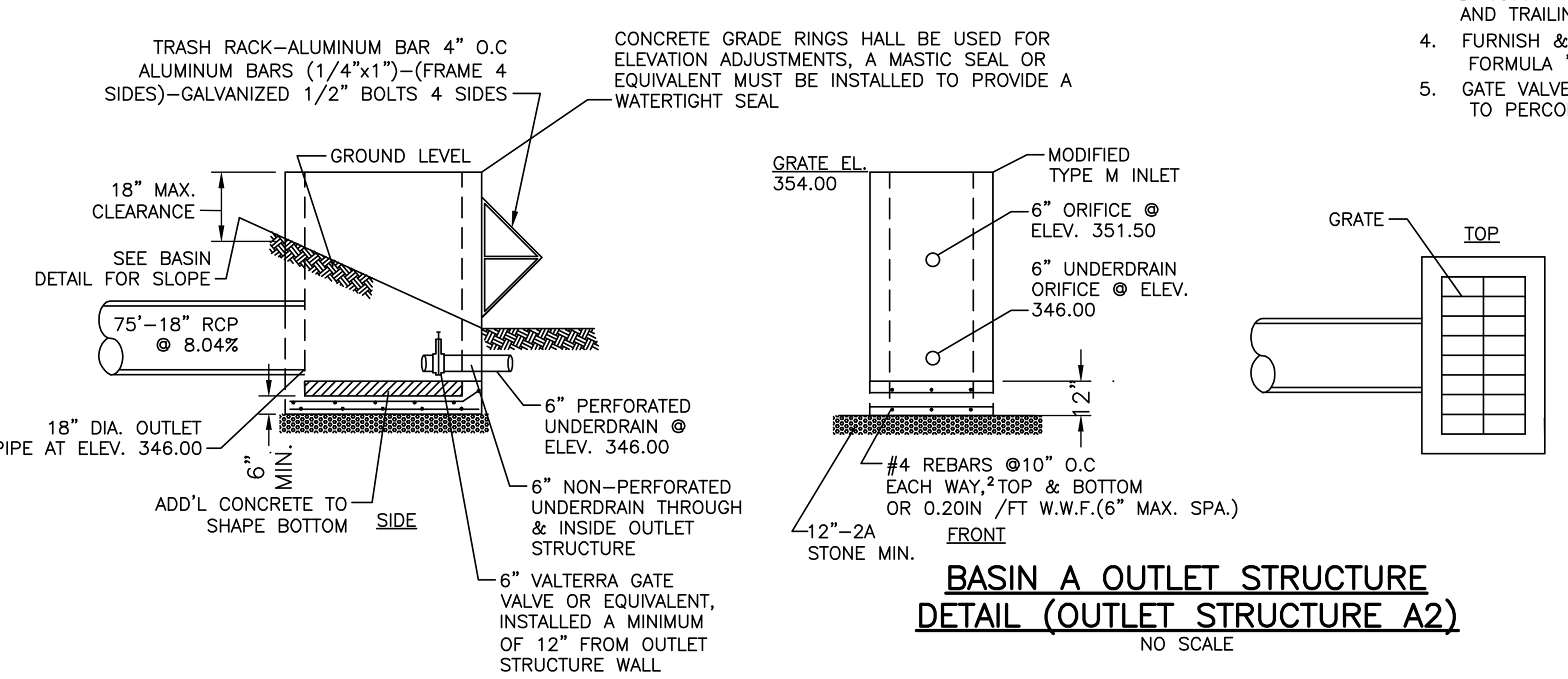

BASIN A OUTLET STRUCTURE DETAIL (OUTLET STRUCTURE A2)

NO SCALE

OUTLET NOTES:

1. ALL WALL REINFORCEMENT TO BE ONE LAYER OF REINFORCEMENT BARS (0.12 IN/FT)MIN. EACH WAY.
2. SEE PENNDOT STANDARD RC-34 FOR ADDITIONAL DETAILS.
3. OWNER SHALL ENSURE THAT THE TOP OF GRATE IS FREE FROM ANY DEBRIS OR OBSTRUCTIONS AS NEEDED OR AFTER EVERY SUBSTANTIAL RAINFALL.
4. A 12" 2A STONE SUBBASE SHALL BE PLACED BELOW THE OUTLET STRUCTURE IN 4" MAXIMUM LIFTS.

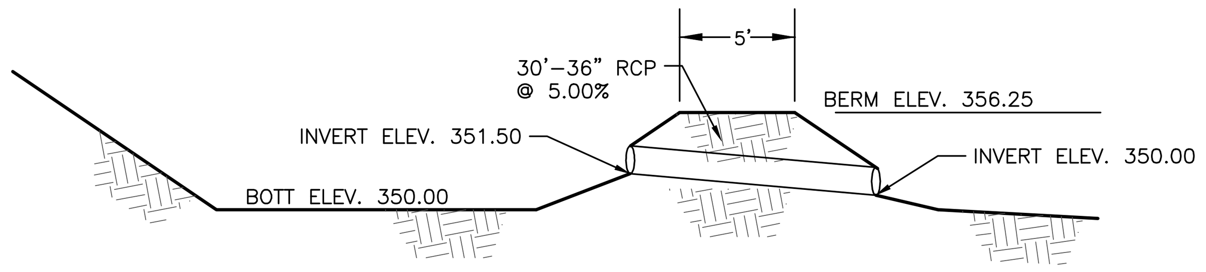

SPILLWAY PLAN VIEW

NOTE:

1. NAG LINING SHALL BE NORTH AMERICAN GREEN OR APPROVED EQUAL.
2. LINING SHALL BE INSTALLED TO TOE OF BERM.

FOREBAY A DETAIL

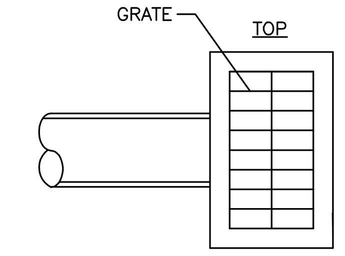

OUTLET NOTES:

1. ALL WALL REINFORCEMENT TO BE ONE LAYER OF REINFORCEMENT BARS (0.12 IN/FT)MIN. EACH WAY.
2. SEE PENNDOT STANDARD RC-34 FOR ADDITIONAL DETAILS.
3. OWNER SHALL ENSURE THAT THE TOP OF GRATE IS FREE FROM ANY DEBRIS OR OBSTRUCTIONS AS NEEDED OR AFTER EVERY SUBSTANTIAL RAINFALL.
4. A 12" 2A STONE SUBBASE SHALL BE PLACED BELOW THE OUTLET STRUCTURE IN 4" MAXIMUM LIFTS.

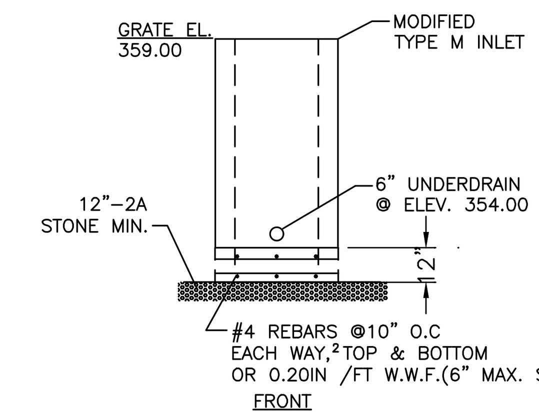

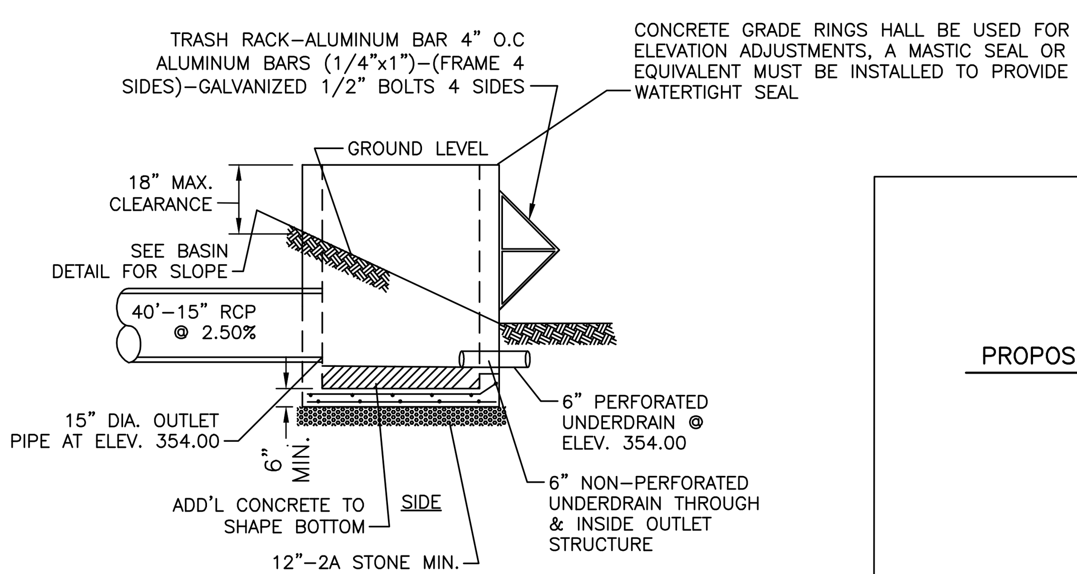

BASIN B OUTLET STRUCTURE DETAIL (OUTLET STRUCTURE B2)

NO SCALE

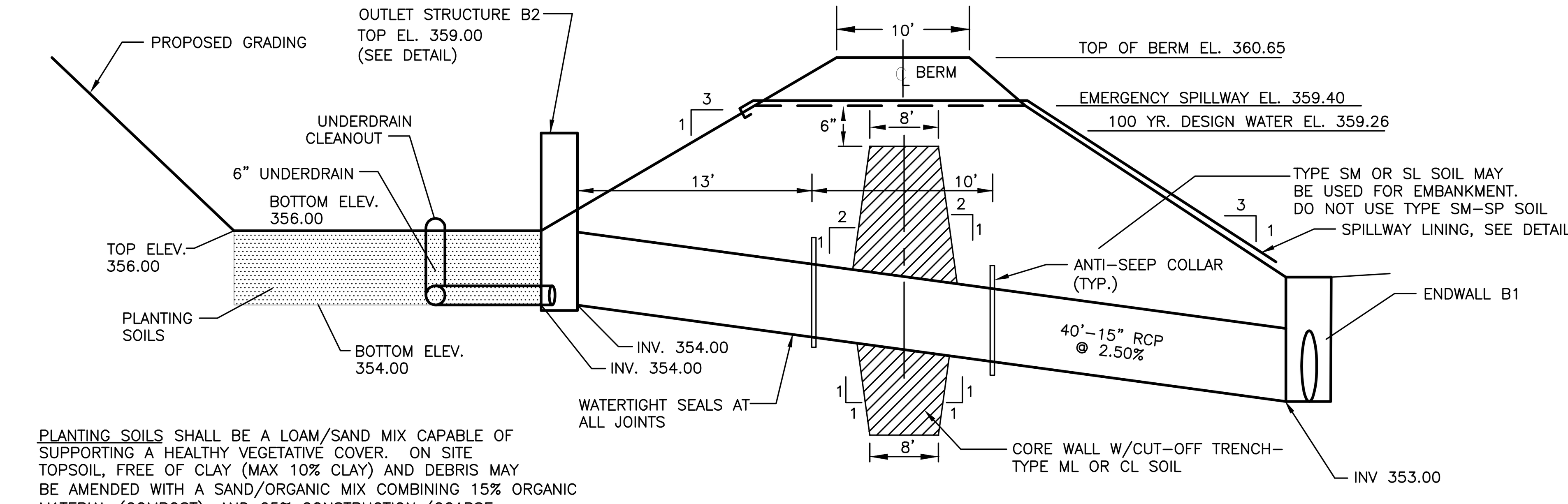

PLANTING SOILS SHALL BE A LOAM/SAND MIX CAPABLE OF SUPPORTING A HEALTHY VEGETATIVE COVER. ON SITE TOPSOIL, FREE OF CLAY (MAX 10% CLAY) AND DEBRIS MAY BE AMENDED WITH A SAND/ORGANIC MIX COMBINING 15% ORGANIC MATERIAL (COMPOST), AND 25% CONSTRUCTION (COARSE GRAINED) SAND.

NOTE: INSTALL PLANTING SOIL IN 18-INCHES MAXIMUM LIFTS AND LIGHTLY COMPACTED (TAMP WITH BACKHOE BUCKET OR BY HAND). DO NOT ALLOW EQUIPMENT MOVEMENT OVER PLANTING SOIL – DO NOT OVER COMPACT.

BIO-RETENTION BASIN B DETAIL

NO SCALE

CONSTRUCTION NOTES:

1. REMOVE ALL TOPSOIL OVER EMBANKMENT PRIOR TO PLACING FILL.
2. BASIN OUTLET PIPE SHALL BE CLASS III "O" RING RCP.
3. PLACE FILL IN 8" MAXIMUM LIFTS TO A MINIMUM 95% DRY DENSITY. PRIOR TO PROCEEDING TO THE NEXT LIFT, COMPACTION SHALL BE CHECKED BY THE TOWNSHIP ENGINEER OR AN APPROVED SOILS ENGINEER WHO SHALL PROVIDE THE TOWNSHIP ENGINEER WITH A WRITTEN REPORT. COMPACTION TESTS SHALL BE PERFORMED USING THE MODIFIED PROCTOR METHOD IN ACCORDANCE WITH ASTM D-1577. COMPACTION TESTS SHALL BE RUN ON THE LEADING AND TRAILING EDGE AS WELL AS THE TOP OF THE BERM.
4. FURNISH & PLACE 8" MINIMUM TOPSOIL, SOIL SUPPLEMENTS, FORMULA "B" SEED, MULCH, PER PENN DOT 408.
5. LEAVE GATE VALVE OPEN TO ALLOW DE-WATERING OF BASIN.

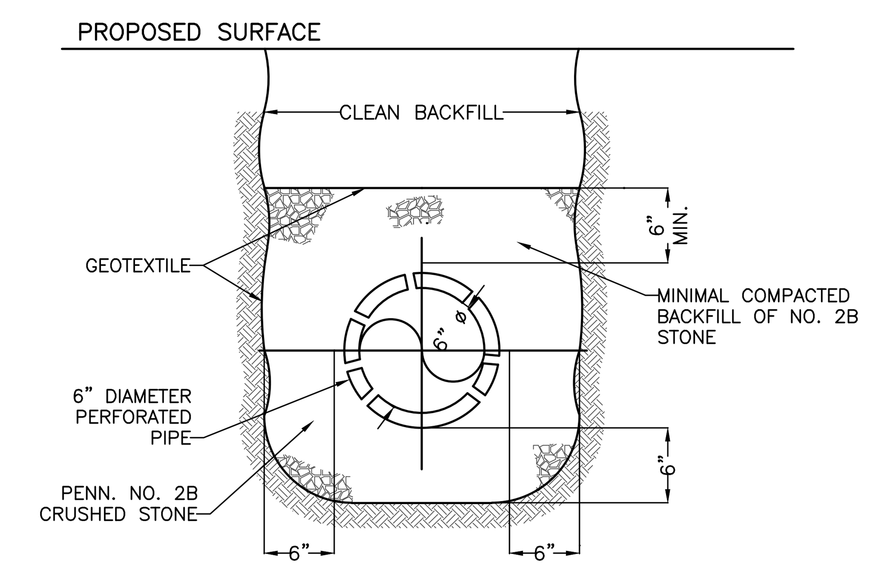

RAIN GARDEN/BASIN UNDERDRAIN

NO SCALE

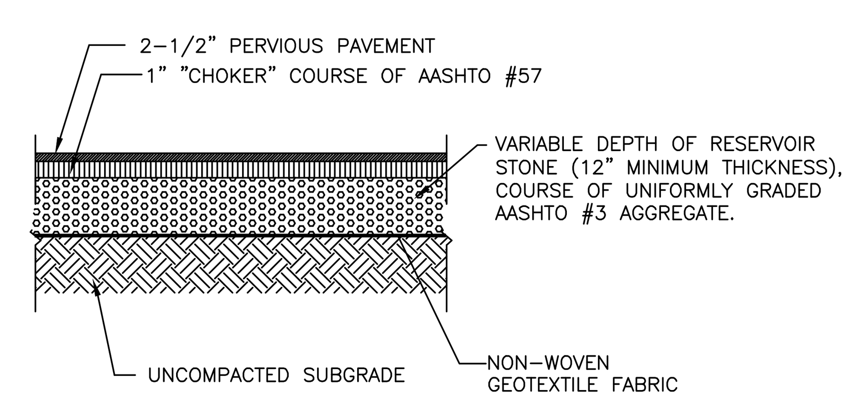

ALL CONSTRUCTION AND DESIGN TO BE IN ACCORDANCE WITH WILLISTOWN TOWNSHIP SPECIFICATIONS.

PERVIOUS PAVEMENT FOR WALKING PATH SECTION

NO SCALE

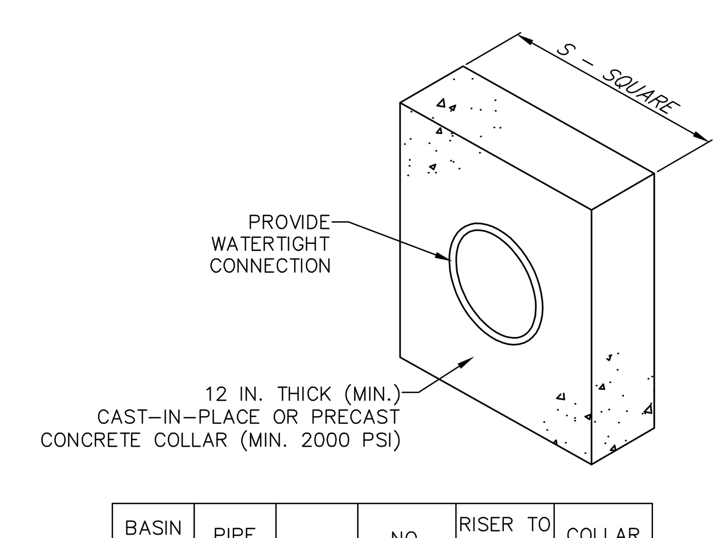

BASIN OR TRAP NO.	PIPE SIZE (IN)	S (IN)	NO. OF COLLARS	RISER TO FIRST COLLAR (FT)	COLLAR SPACING (FT)
A	18	72	2	20	12
B	15	72	2	13	10

NOTES:

ALL COLLARS SHALL BE INSTALLED SO AS TO BE WATERTIGHT.

COLLAR SIZE AND SPACING SHALL BE AS INDICATED WITHIN TABLE.

STANDARD CONSTRUCTION DETAIL #7-16 CONCRETE ANTI-SEEP COLLAR FOR PERMANENT BASINS OR TRAPS

NOT TO SCALE

Agri Drain CORPORATION

PO Box 458 · 1462 340th Street · Adair, Iowa 50002
Phone: 1-800-232-4742 · Fax: 1-800-282-3353
www.agridrain.com · email: info@agridrain.com

$1^1/_2$", 2", 3", 4", 6", & 8" Valterra Gate Valves

Inexpensive valve for industrial, agricultural, and commercial markets.

- Must provide a stable base, and installation using flexible couplers is recommended.
- Well suited as a drain valve to tanks.
- Attaches to SCH40 PVC pipe.
- Unrestricted flow.
- Quick opening.
- Trouble-free simplicity.
- 100% water tested at factory.
- Quick shutoff in low pressure or vacuum lines.
- Other sizes available.

$1^1/_2$" Valterra Gate Valve

Materials and Specifications

	1 1/2"	2"	3"	4"	6"/8"
Color	White	White	White	White	White
Hubs	PVC	PVC	PVC	PVC	PVC
Body	PVC	PVC	PVC	PVC	ABS
Shaft	304SS	304SS	304SS	304SS	304SS
Paddle	Polypro	304SS	304SS	304SS	304SS
Handle	Plastic	Plastic	Plastic	Die Cast Aluminum	304SS
Seals	Sarlink	Sarlink	Sarlink	Sarlink	Sarlink
Max PSI Open/Closed	30/45	20/40	15/15	15/15	6/10

Dimensions and Hub Depth

	1 1/2"	2"	3"	4"	6"	8"
A	6.5"	7.5"	9.25"	13.25"	22.75"	22.75"
B	8.625"	10.25"	13"	18"	31.125"	31.125"
C	2.896"	3.37"	4.37"	6.665"	11.1"	11.1"
D (Stub I.D.)	1.913"	2.387"	3.516"	4.518"	6.647"	8.655"
E	3.9375"	4.5"	5.1875"	7.4375"	13.25"	12.1875"
F	3.375"	3.5"	4.5"	5.1875"	11.125"	13.75"
G	1.25"	1.6"	1.8"	1.7"	4.375"	5.67"
H	3.25"	3.25"	3.25"	3.25"	3.5"	3.5"

"B" Dimension is height of valve in fully open position.

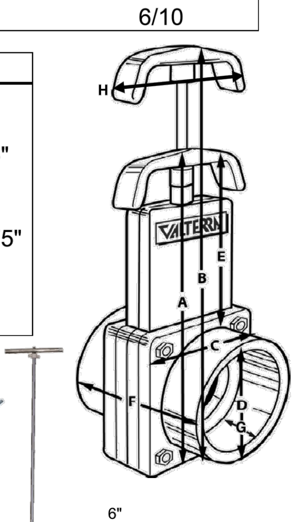

Extension Rods for Valterra Gate Valves

- Extension Rod for 1½"-4" Valve
  - Aluminum tube that easily threads onto valve shaft. Handle threads onto stub.
  - Available in 12", 24", 36", and 48" lengths.
- Extension Rod for 6"-8" Valve
  - Stainless steel rod with cotter pin(s) for assembly. Can attach multiple extensions together to achieve greater height.
  - Available in 12", 36", and 72" (two 36" pieces) lengths.

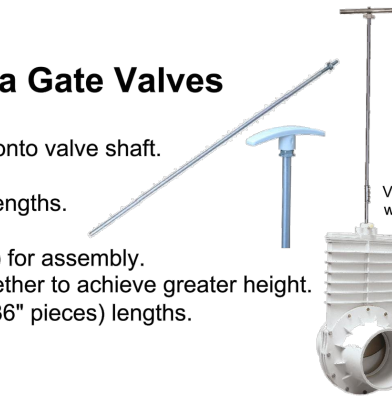

6" Valterra Gate Valve with Extension Rod

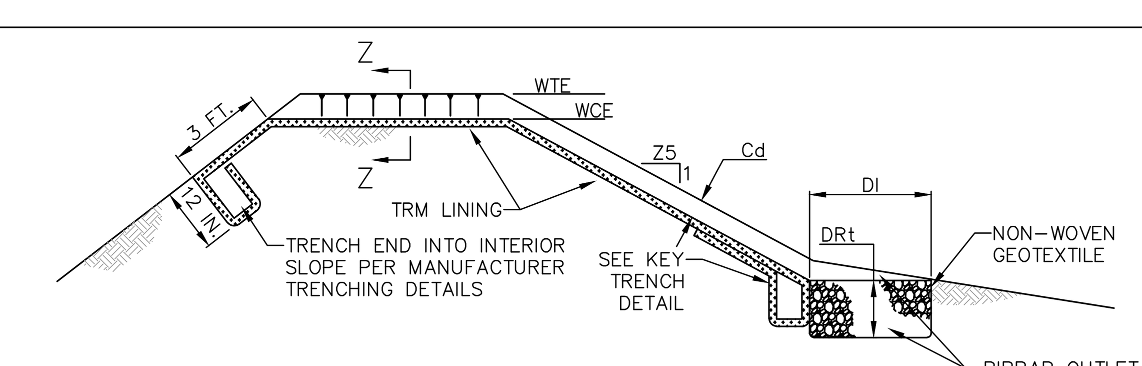

EMBANKMENT SECTION ALONG EMERGENCY SPILLWAY
SECTION X-X

BASIN NO.	WEIR					LINING		CHANNEL		DISSIPATOR			
	Z3 (FT)	Z4 (FT)	TOP ELEV WTE (FT)	CREST ELEV WCE (FT)	WIDTH Ww (FT)	TRM TYPE	STAPLE PATTERN	Z5 (FT)	DEPTH Cd (FT)	LENGTH DI (FT)	WIDTH Dw (FT)	RIPRAP SIZE (R-_)	RIPRAP THICK. DRt (IN)
A	3	3	356.0	354.5	64	NAG P300	NAG	3	1.5	15	64	3	9
B	3	3	360.65	359.40	15	NAG P300	NAG	3	1.25	N/A	N/A	N/A	N/A

NOTES:

* HEAVY EQUIPMENT SHALL NOT CROSS OVER SPILLWAY WITHOUT PRECAUTIONS TAKEN TO PROTECT TRM LINING.
* DISPLACED LINER WITHIN THE SPILLWAY AND/OR OUTLET CHANNEL SHALL BE REPLACED IMMEDIATELY.
* RIPRAP AT TOE OF EMBANKMENT SHALL BE EXTENDED A SUFFICIENT LENGTH IN BOTH DIRECTIONS TO PREVENT SCOUR.
* THE USE OF BAFFLES THAT REQUIRE SUPPORT POSTS ARE RESTRICTED FROM USE IN BASINS REQUIRING IMPERVIOUS LINERS.

STANDARD CONSTRUCTION DETAIL #7-13 SEDIMENT BASIN EMERGENCY SPILLWAY WITH TRM LINING

NOT TO SCALE

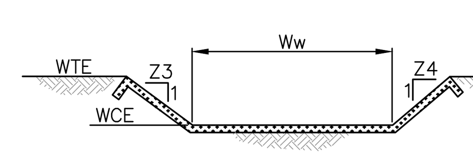

WEIR
SECTION Z-Z

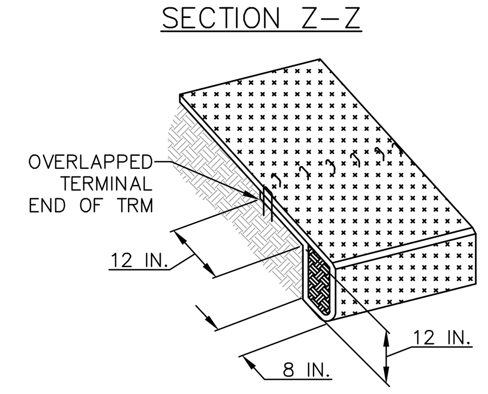

KEY TRENCH AT TOE OF SLOPE OF SPILLWAY

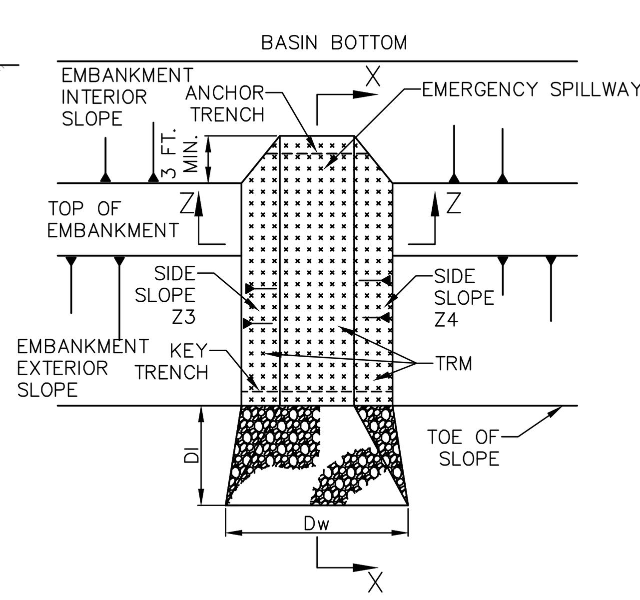

PLAN VIEW
RIPRAP OUTLET DISSIPATOR

© COPYRIGHT BURSICH ASSOCIATES, INC. 2018
ALL REPORTS, DOCUMENTS, SPECIFICATIONS, COMPUTER FILES, FIELD DATA, NOTES AND OTHER DOCUMENTS AND INSTRUMENTS PREPARED BY BURSICH ASSOCIATES, INC. AS INSTRUMENTS OF SERVICE SHALL REMAIN THE PROPERTY OF BURSICH ASSOCIATES, INC. AND THEREFORE SHALL RETAIN ALL COMMON LAW, STATUTORY AND OTHER RESERVED RIGHTS, INCLUDING THE COPYRIGHT THERETO. ANY USE, REUSE OR MODIFICATION/ALTERATION AND REPRODUCTION WITHOUT THE EXPRESS WRITTEN CONSENT OF BURSICH ASSOCIATES, INC. IS STRICTLY PROHIBITED. ANY USE, REUSE OR MODIFICATION/ALTERATION BY ANYONE WITHOUT WRITTEN CONSENT SHALL BE DEEMED AN AGREEMENT BETWEEN THE USER AND BURSICH ASSOCIATES, INC. WHICH SHALL INDEMNIFY AND SAVE HARMLESS BURSICH ASSOCIATES, INC. FOR ALL CLAIMS, DAMAGES, LOSSES AND EXPENSES ARISING FROM THE USE THEREFROM.

NO.	REVISION	DATE	BY
2	REVISED PER TOWNSHIP REVIEW LETTER DATED 12/11/18	1/30/19	BG
1	REVISED PER TOWNSHIP REVIEW LETTERS DATED 9/13/18 & 10/26/18	11/5/18	BG

SEAL

NORTH

MANAGER NF	
DESIGN KK	CHKD. BY
DRAFT BG	CHKD. BY
FILE ROU-01	DATE 8/9/2018
NOTES	SCALE 1"=40'

BURSICH
Sharing your Vision

Corporate Headquarters
2129 East High Street
Pottstown, PA 19464
610-323-4040

Southampton Office
706 Lakeside Drive
Southampton, PA 18966

www.bursich.com

CLIENT

ROUSE/CHAMBERLIN, LTD
500 EXTON COMMONS
EXTON, PA 19341

SUBJECT

POST CONSTRUCTION STORMWATER MANAGEMENT DETAILS

PRESERVE AT WILLISTOWN

WILLISTOWN TOWNSHIP, CHESTER COUNTY, PENNSYLVANIA

JOB NO. 187872

SHEET NO. 4 OF 5

DWG. NO. PC487872

P:\ROU-01\187872-00\dwg\LD_Plan\PC187872.dwg

© COPYRIGHT BURSICH ASSOCIATES, INC. 2018
ALL REPORTS, DOCUMENTS, SPECIFICATIONS, COMPUTER FILES, FIELD DATA, NOTES AND OTHER DOCUMENTS AND INSTRUMENTS PREPARED BY BURSICH ASSOCIATES, INC. AS INSTRUMENTS OF SERVICE SHALL REMAIN THE PROPERTY OF BURSICH ASSOCIATES, INC. AND THEREFORE SHALL RETAIN ALL COMMON LAW, STATUTORY AND OTHER RESERVED RIGHTS, INCLUDING THE COPYRIGHT THERETO. ANY USE, REUSE OR MODIFICATION/ALTERATION AND REPRODUCTION WITHOUT THE EXPRESS WRITTEN CONSENT OF BURSICH ASSOCIATES, INC. IS STRICTLY PROHIBITED. ANY USE, REUSE OR MODIFICATION/ALTERATION BY ANYONE WITHOUT WRITTEN CONSENT SHALL BE DEEMED AN AGREEMENT BETWEEN THE USER AND BURSICH ASSOCIATES, INC. WHICH SHALL INDEMNIFY AND SAVE HARMLESS BURSICH ASSOCIATES, INC. FOR ALL CLAIMS, DAMAGES, LOSSES AND EXPENSES ARISING FROM THE USE THEREFROM.

OPERATION & MAINTENANCE NOTES:

* 1720 W CHESTER PIKE HOMEOWNERS ASSOCIATION SHALL BE RESPONSIBLE FOR THE OPERATION AND MAINTENANCE OF THE PROPOSED BMP'S ON THE SITE IN PERPETUITY PER DEED RESTRICTIONS RECORDED AT THE COUNTY. WILLISTOWN TOWNSHIP SHALL HAVE THE RIGHT, BUT NOT THE RESPONSIBILITY, TO INSPECT, MAINTAIN AND REPAIR ANY BMP ON THE SITE, AT THE EXPENSE OF THE PROPERTY OWNERS, IF IT IS DETERMINED THAT THE OWNER HAS NEGLECTED SAID STRUCTURES TO THE PUBLIC DETRIMENT.

LAWN AREAS (GRASS)

ALL LAWN AREAS SHOULD HAVE A MINIMUM UNIFORM 70% PERENNIAL VEGETATIVE COVER IN ORDER TO PREVENT ACCELERATED EROSION AND ALLOW STORMWATER TO PERCOLATE INTO THE GROUND.

INSPECTION SCHEDULE
- THE PROPERTY OWNER OR THEIR DESIGNEE SHALL VISUALLY INSPECT ALL LAWN AREAS A MINIMUM OF TWICE A YEAR, IN THE SPRING AND FALL, AND AFTER RUNOFF EVENTS TO ENSURE THE AREA IS COVERED BY AT LEAST 70% COVER AND THERE IS NO EROSION.
- THE PROPERTY OWNER OR THEIR DESIGNEE SHALL VISUALLY INSPECT ALL LAWN AREAS DURING THE GROWING SEASON A MINIMUM OF ONCE PER WEEK TO CHECK FOR LAWN HEIGHT, MOISTURE CONTENT AND THE NEED FOR WATERING AND FERTILIZER APPLICATION.

OPERATION & MAINTENANCE PROCEDURES
- THE PROPERTY OWNER OR THEIR DESIGNEE SHOULD MOW THE LAWN ON A REGULAR BASIS THROUGHOUT THE GROWING SEASON; IT SHOULD BE MAINTAINED AT A HEIGHT OF 2 TO 3.5 INCHES.
- THE PROPERTY OWNER OR THEIR DESIGNEE SHOULD WATER THE LAWN AS NECESSARY BASED ON WEATHER CONDITIONS. DURING THE SUMMER WHEN RAIN IS SPARSE THE LAWN SHOULD BE WATERED EVERY OTHER DAY. DURING THE SPRING AND FALL WHEN RAIN IS ABUNDANT THE LAWN WILL NOT NEED TO BE WATERED. THE LAWN SHOULD BE WATERED TO ENSURE THE GRASS IS NOT ALLOWED TO BURN OR TURN BROWN.
- THE PROPERTY OWNER OR THEIR DESIGNEE SHOULD FERTILIZE THE LAWN USING A 10-10-20 FERTILIZER, AT 1000 POUNDS PER ACRE, A MINIMUM OF 2 TIMES PER GROWING SEASON, ONCE IN THE SPRING AND ONCE IN THE FALL. IT IS POSSIBLE TO OVER FERTILIZE SO THE MAXIMUM NUMBER OF FERTILIZER APPLICATIONS SHOULD BE 4 TIMES PER YEAR. IF THE FERTILIZER DOES NOT WORK A SOILS TEST SHOULD BE PERFORMED AND THE FERTILIZER TYPE SHOULD BE REEVALUATED.
- SPECIAL CARE SHALL BE TAKEN TO AVOID COMPACTING LAWN AREAS, VEHICLES AND OTHER HEAVY EQUIPMENT AND ITEMS SHOULD BE KEPT OFF LAWN AREAS.
- IF THE REQUIRED 70% VEGETATIVE COVER IS NOT MET THE PROPERTY OWNER OR THEIR DESIGNEE SHOULD PERFORM A SOILS TEST AND REEVALUATE THE SEED SELECTION USED ON THE PROPERTY. THE SPARSE AREAS SHOULD BE IMMEDIATELY SEEDED AND MULCHED. IF THE SEASON PREVENTS RESEEDING, MULCH OR EROSION NETTING IS AN EFFECTIVE TEMPORARY COVER.
- IF THERE IS EROSION IN THE LAWN AREAS, THE SOIL SHALL BE REPLACED WITH A MINIMUM OF 6 INCHES OF TOPSOIL AND THE AREA SHOULD BE IMMEDIATELY SEEDED AND MULCHED. IF THE SEASON PREVENTS RESEEDING, MULCH OR EROSION NETTING IS AN EFFECTIVE TEMPORARY COVER. IF THE EROSION CONTINUES TO OCCUR IN THE SAME LOCATION THE PROPERTY OWNER OR THEIR DESIGNEE SHALL CONTACT AN ENGINEER TO DETERMINE AN ACCEPTABLE SOLUTION.

INLETS/STORM SEWERS/ROOF DRAINS

INLETS, STORM SEWERS AND ROOF DRAINS SHOULD BE KEPT CLEAN FROM DEBRIS AND SEDIMENT TO ALLOW STORMWATER FLOWS THE FULL CAPACITY OF THE INLET GRATE AND STORM SEWER.

INSPECTION SCHEDULE
- THE PROPERTY OWNER OR THEIR DESIGNEE SHALL VISUALLY INSPECT ALL INLETS, STORM SEWERS AND ROOF DRAINS A MINIMUM OF TWICE A YEAR, IN THE SPRING AND FALL, AND AFTER RUNOFF EVENTS TO ENSURE THEY ARE NOT CLOGGED FROM TRASH, DEBRIS OR SEDIMENT.
- THE PROPERTY OWNER OR THEIR DESIGNEE SHALL VISUALLY INSPECT ALL INLETS, STORM SEWER AND ROOF DRAINS A MINIMUM OF ONCE PER YEAR FOR STRUCTURAL INTEGRITY.

OPERATION & MAINTENANCE PROCEDURES
- THE PROPERTY OWNER OR THEIR DESIGNEE SHOULD REMOVE ALL TRASH AND DEBRIS FROM THE GRATE AND INLET BOTTOM, FOLLOWING CURRENT RECYCLING PROCEDURES, A MINIMUM OF 2 TIMES PER YEAR AND AFTER RUNOFF EVENTS. THIS CAN BE ACCOMPLISHED BY HAND OR WITH THE USE OF A COMMERCIAL VACUUM.
- THE PROPERTY OWNER OR THEIR DESIGNEE SHOULD REMOVE ALL TRASH AND DEBRIS FROM THE STORM SEWERS, FOLLOWING CURRENT RECYCLING PROCEDURES, A MINIMUM OF 2 TIMES PER YEAR AND AFTER RUNOFF EVENTS. THIS CAN BE ACCOMPLISHED BY HAND OR WITH THE USE OF A HIGH PRESSURE WATER STREAM OR EQUIVALENT MEANS TO ALLOW CLEAN STORMWATER TO REACH THE STORMWATER FACILITIES.
- THE PROPERTY OWNER OR THEIR DESIGNEE SHOULD REMOVE ALL TRASH AND DEBRIS FROM THE ROOF DRAINS AND GUTTERS.
- THE PROPERTY OWNER OR THEIR DESIGNEE SHOULD INSPECT THE INLETS, STORM SEWERS AND ROOF DRAINS FOR STRUCTURAL INTEGRITY, SHOULD ANYTHING OUT OF THE ORDINARY BE FOUND A PROFESSIONAL SHOULD BE BROUGHT IN TO ANALYZE THE SYSTEM AND DETERMINE WHETHER REPLACEMENT IS NECESSARY.

BIO-RETENTION BASIN

BIO-RETENTION BASINS SHOULD BE KEPT CLEAN FROM DEBRIS AND SEDIMENT TO ENSURE THE SOILS BENEATH ARE NOT ALLOWED TO BE SILTED UP OR COMPACTED AND TO ENSURE THEY DRAIN WITHIN THEIR SPECIFIC DEWATERING PERIOD AND MAINTAIN THE REQUIRED STORAGE VOLUME.

INSPECTION SCHEDULE
- THE PROPERTY OWNER OR THEIR DESIGNEE SHALL VISUALLY INSPECT ALL INLETS AND STORM SEWERS TRIBUTARY TO THE FACILITIES, AND THE BASIN A MINIMUM OF TWICE A YEAR, IN THE SPRING AND FALL, AND AFTER RUNOFF EVENTS, TO ENSURE THEY ARE NOT CLOGGED FROM TRASH, DEBRIS OR SEDIMENT.
- THE PROPERTY OWNER OR THEIR DESIGNEE SHALL VISUALLY INSPECT ALL VEGETATED AREAS A MINIMUM OF TWICE A YEAR, IN THE SPRING AND FALL, AND AFTER RUNOFF EVENTS TO ENSURE THE AREA IS COVERED BY AT LEAST 70% COVER AND THERE IS NO EROSION.
- THE PROPERTY OWNER OR THEIR DESIGNEE SHALL VISUALLY INSPECT THE BASIN DURING THE GROWING SEASON A MINIMUM OF ONCE PER WEEK TO CHECK FOR VEGETATION HEIGHT, MOISTURE CONTENT AND THE NEED FOR WATERING.
- THE PROPERTY OWNER OR THEIR DESIGNEE SHALL VISUALLY INSPECT THE BASIN AFTER RUNOFF EVENTS TO ENSURE THE BASIN IS DRAINING WITHIN ITS SPECIFIC DEWATERING PERIOD.

OPERATION & MAINTENANCE PROCEDURES
- THE PROPERTY OWNER OR THEIR DESIGNEE SHOULD REMOVE ALL TRASH, DEBRIS AND SEDIMENT FROM THE INLET GRATE AND SUMP AND OUTLET STRUCTURE, FOLLOWING CURRENT RECYCLING PROCEDURES. THIS CAN BE ACCOMPLISHED BY HAND OR WITH THE USE OF A COMMERCIAL VACUUM.
- THE PROPERTY OWNER OR THEIR DESIGNEE SHOULD REMOVE ALL TRASH, DEBRIS AND SEDIMENT FROM THE STORM SEWERS, FOLLOWING CURRENT RECYCLING PROCEDURES, THIS CAN BE ACCOMPLISHED BY HAND OR WITH THE USE OF A HIGH PRESSURE WATER STREAM OR EQUIVALENT MEANS TO ALLOW CLEAN STORMWATER TO REACH THE STORMWATER FACILITIES.
- THE PROPERTY OWNER OR THEIR DESIGNEE SHOULD REMOVE ALL TRASH, DEBRIS AND SEDIMENT FROM THE BASIN, FOLLOWING CURRENT RECYCLING PROCEDURES. THIS CAN BE ACCOMPLISHED BY HAND OR WITH A MACHINE, HOWEVER NO HEAVY EQUIPMENT SHALL BE DRIVEN IN THE BASIN AND ALL DISTURBED AREAS SHALL BE IMMEDIATELY SEEDED AND EROSION NETTED.
- IF THE REQUIRED 70% VEGETATIVE COVER IS NOT MET THE PROPERTY OWNER OR THEIR DESIGNEE SHOULD PERFORM A SOILS TEST AND REEVALUATE THE SEED SELECTION USED ON THE PROPERTY. A MEADOW MIX THAT IS CAPABLE OF SUSTAINING PERIODIC INUNDATION SHOULD BE USED WITH AN ANNUAL RYE COMPANION CROP. THE SPARSE AREAS SHOULD BE IMMEDIATELY SEEDED AND MULCHED. IF THE SEASON PREVENTS RESEEDING, MULCH OR EROSION NETTING IS AN EFFECTIVE TEMPORARY COVER.
- IF THERE IS EROSION IN THE BASIN, THE SOIL SHALL BE REPLACED WITH A MINIMUM OF 6 INCHES OF TOPSOIL AND THE AREA SHOULD BE IMMEDIATELY SEEDED AND MULCHED. IF THE SEASON PREVENTS RESEEDING, MULCH OR EROSION NETTING IS AN EFFECTIVE TEMPORARY COVER. IF THE EROSION CONTINUES TO OCCUR IN THE SAME LOCATION THE PROPERTY OWNER OR THEIR DESIGNEE SHALL CONTACT AN ENGINEER TO DETERMINE AN ACCEPTABLE SOLUTION.
- THE PROPERTY OWNER OR THEIR DESIGNEE SHOULD MOW THE BASIN ONCE OR TWICE A YEAR.
- THE PROPERTY OWNER OR THEIR DESIGNEE SHOULD WATER THE BASIN AS NECESSARY BASED ON WEATHER CONDITIONS. DURING THE SUMMER WHEN RAIN IS SPARSE THE BASIN SHOULD BE WATERED ONCE A WEEK. DURING THE SPRING AND FALL WHEN RAIN IS ABUNDANT THE BASIN WILL NOT NEED TO BE WATERED. THE BASIN SHOULD BE WATERED TO ENSURE THE VEGETATION IS NOT ALLOWED TO BURN OR TURN BROWN.
- THE PROPERTY OWNER OR THEIR DESIGNEE SHOULD PROHIBIT VEHICLES FROM BEING PARKED OR DRIVEN IN THE BASIN, AND CARE SHOULD BE TAKEN TO AVOID EXCESSIVE COMPACTION BY MOWERS.
- THE PROPERTY OWNER OR THEIR DESIGNEE SHOULD INSPECT THE FACILITY AFTER RAIN EVENTS AND MAKE SURE THAT RUNOFF DRAINS DOWN WITHIN THE DEWATERING PERIODS LISTED BELOW. MOSQUITO'S SHOULD NOT BE A PROBLEM IF THE WATER DRAINS IN 72 HOURS. MOSQUITOES REQUIRE A CONSIDERABLY LONG BREEDING PERIOD WITH RELATIVELY STATIC WATER LEVELS.
- THE PROPERTY OWNER OR THEIR DESIGNEE SHOULD ALSO INSPECT FOR ACCUMULATION OF SEDIMENT, DAMAGE TO OUTLET CONTROL STRUCTURES, EROSION CONTROL MEASURES, SIGNS OF WATER CONTAMINATION/SPILLS AND SLOPE STABILITY IN THE BERMS.
- THE PROPERTY OWNER OR THEIR DESIGNEE SHOULD ENSURE THE FACILITY IS FUNCTIONING PROPERLY AND THE WATER IS DRAINING THROUGH THE UNDERDRAIN OR PERCOLATING INTO THE GROUND. IF THE FACILITY IS NO LONGER DRAINING WATER IT IS PROBABLE THAT THE GROUND BENEATH THE FACILITY OR THE UNDERDRAIN HAS BEEN CLOGGED WITH SILT OR COMPACTED AND THE SOILS WILL NEED TO BE REMOVED AND THE SOILS BENEATH THE FACILITY SHOULD BE REPLACED WITH 2 FEET OF AMENDED SOILS AND/OR THE UNDERDRAIN SHALL BE CLEANED OUT. REFER TO THE SOIL SPECIFICATIONS ON THE BASIN DETAILS ON THE APPROVED PCSM PLANS. THE FACILITY SHALL BE RE-INSTALLED TAKING SPECIAL CARE TO AVOID COMPACTION AND SILTING UP OF THE BOTTOM.

INFILTRATION BASIN

INFILTRATION BASINS SHOULD BE KEPT CLEAN FROM DEBRIS AND SEDIMENT TO ENSURE THE SOILS BENEATH ARE NOT ALLOWED TO BE SILTED UP OR COMPACTED AND TO ENSURE THEY DRAIN WITHIN THEIR SPECIFIC DEWATERING PERIOD AND MAINTAIN THE REQUIRED STORAGE VOLUME.

INSPECTION SCHEDULE
- THE PROPERTY OWNER OR THEIR DESIGNEE SHALL VISUALLY INSPECT ALL INLETS AND STORM SEWERS TRIBUTARY TO THE FACILITIES, AND THE INFILTRATION BASIN A MINIMUM OF TWICE A YEAR, IN THE SPRING AND FALL, AND AFTER RUNOFF EVENTS, TO ENSURE THEY ARE NOT CLOGGED FROM TRASH, DEBRIS OR SEDIMENT.
- THE PROPERTY OWNER OR THEIR DESIGNEE SHALL VISUALLY INSPECT ALL VEGETATED AREAS A MINIMUM OF TWICE A YEAR, IN THE SPRING AND FALL, AND AFTER RUNOFF EVENTS TO ENSURE THE AREA IS COVERED BY AT LEAST 70% COVER AND THERE IS NO EROSION.
- THE PROPERTY OWNER OR THEIR DESIGNEE SHALL VISUALLY INSPECT THE BASIN DURING THE GROWING SEASON A MINIMUM OF ONCE PER WEEK TO CHECK FOR VEGETATION HEIGHT, MOISTURE CONTENT AND THE NEED FOR WATERING.
- THE PROPERTY OWNER OR THEIR DESIGNEE SHALL VISUALLY INSPECT THE BASIN AFTER RUNOFF EVENTS TO ENSURE THE BASIN IS DRAINING WITHIN ITS SPECIFIC DEWATERING PERIOD.

OPERATION & MAINTENANCE PROCEDURES
- THE PROPERTY OWNER OR THEIR DESIGNEE SHOULD REMOVE ALL TRASH, DEBRIS AND SEDIMENT FROM THE INLET GRATE AND SUMP AND OUTLET STRUCTURE, FOLLOWING CURRENT RECYCLING PROCEDURES. THIS CAN BE ACCOMPLISHED BY HAND OR WITH THE USE OF A COMMERCIAL VACUUM.
- THE PROPERTY OWNER OR THEIR DESIGNEE SHOULD REMOVE ALL TRASH, DEBRIS AND SEDIMENT FROM THE STORM SEWERS, FOLLOWING CURRENT RECYCLING PROCEDURES, THIS CAN BE ACCOMPLISHED BY HAND OR WITH THE USE OF A HIGH PRESSURE WATER STREAM OR EQUIVALENT MEANS TO ALLOW CLEAN STORMWATER TO REACH THE STORMWATER FACILITIES.
- THE PROPERTY OWNER OR THEIR DESIGNEE SHOULD REMOVE ALL TRASH, DEBRIS AND SEDIMENT FROM THE BASIN, FOLLOWING CURRENT RECYCLING PROCEDURES. THIS CAN BE ACCOMPLISHED BY HAND OR WITH A MACHINE, HOWEVER NO HEAVY EQUIPMENT SHALL BE DRIVEN IN THE BASIN AND ALL DISTURBED AREAS SHALL BE IMMEDIATELY SEEDED AND EROSION NETTED.
- IF THE REQUIRED 70% VEGETATIVE COVER IS NOT MET THE PROPERTY OWNER OR THEIR DESIGNEE SHOULD PERFORM A SOILS TEST AND REEVALUATE THE SEED SELECTION USED ON THE PROPERTY. A MEADOW MIX THAT IS CAPABLE OF SUSTAINING PERIODIC INUNDATION SHOULD BE USED WITH AN ANNUAL RYE COMPANION CROP. THE SPARSE AREAS SHOULD BE IMMEDIATELY SEEDED AND MULCHED. IF THE SEASON PREVENTS RESEEDING, MULCH OR EROSION NETTING IS AN EFFECTIVE TEMPORARY COVER.
- IF THERE IS EROSION IN THE BASIN, THE SOIL SHALL BE REPLACED WITH A MINIMUM OF 6 INCHES OF TOPSOIL AND THE AREA SHOULD BE IMMEDIATELY SEEDED AND MULCHED. IF THE SEASON PREVENTS RESEEDING, MULCH OR EROSION NETTING IS AN EFFECTIVE TEMPORARY COVER. IF THE EROSION CONTINUES TO OCCUR IN THE SAME LOCATION THE PROPERTY OWNER OR THEIR DESIGNEE SHALL CONTACT AN ENGINEER TO DETERMINE AN ACCEPTABLE SOLUTION.
- THE PROPERTY OWNER OR THEIR DESIGNEE SHOULD MOW THE BASIN ONCE OR TWICE A YEAR.
- THE PROPERTY OWNER OR THEIR DESIGNEE SHOULD WATER THE BASIN AS NECESSARY BASED ON WEATHER CONDITIONS. DURING THE SUMMER WHEN RAIN IS SPARSE THE BASIN SHOULD BE WATERED ONCE A WEEK. DURING THE SPRING AND FALL WHEN RAIN IS ABUNDANT THE BASIN WILL NOT NEED TO BE WATERED. THE BASIN SHOULD BE WATERED TO ENSURE THE VEGETATION IS NOT ALLOWED TO BURN OR TURN BROWN.
- THE PROPERTY OWNER OR THEIR DESIGNEE SHOULD PROHIBIT VEHICLES FROM BEING PARKED OR DRIVEN IN THE BASIN, ARE CARE SHOULD BE TAKEN TO AVOID EXCESSIVE COMPACTION BY MOWERS.
- THE PROPERTY OWNER OR THEIR DESIGNEE SHOULD INSPECT THE FACILITY AFTER RAIN EVENTS AND MAKE SURE THAT RUNOFF DRAINS DOWN WITHIN THE DEWATERING PERIODS LISTED BELOW. MOSQUITO'S SHOULD NOT BE A PROBLEM IF THE WATER DRAINS IN 72 HOURS. MOSQUITOES REQUIRE A CONSIDERABLY LONG BREEDING PERIOD WITH RELATIVELY STATIC WATER LEVELS.
- THE PROPERTY OWNER OR THEIR DESIGNEE SHOULD ALSO INSPECT FOR ACCUMULATION OF SEDIMENT, DAMAGE TO OUTLET CONTROL STRUCTURES, EROSION CONTROL MEASURES, SIGNS OF WATER CONTAMINATION/SPILLS AND SLOPE STABILITY IN THE BERMS.
- THE PROPERTY OWNER OR THEIR DESIGNEE SHOULD ENSURE THE FACILITY IS FUNCTIONING PROPERLY AND THE WATER IS PERCOLATING INTO THE GROUND. IF THE FACILITY IS NO LONGER DRAINING WATER IT IS PROBABLE THAT THE GROUND BENEATH THE FACILITY HAS BEEN CLOGGED WITH SILT OR COMPACTED AND THE FACILITY WILL NEED TO BE REMOVED AND THE SOILS BENEATH THE FACILITY SHOULD BE REPLACED WITH 2 FEET OF AMENDED SOILS. REFER TO THE SOIL SPECIFICATIONS ON THE BASIN DETAILS ON THE APPROVED PCSM PLANS. THE FACILITY SHALL BE RE-INSTALLED TAKING SPECIAL CARE TO AVOID COMPACTION AND SILTING UP OF THE BOTTOM.

FOREBAY

FOREBAY'S SHOULD BE KEPT CLEAN FROM DEBRIS, GARBAGE AND EXCESSIVE SEDIMENT TO ENSURE THE FACILITY HAS THE REQUIRED STORAGE VOLUME TO PROPERLY COLLECT SEDIMENT.

INSPECTION SCHEDULE
- THE PROPERTY OWNER OR THEIR DESIGNEE SHALL VISUALLY INSPECT ALL INLETS AND STORM SEWERS TRIBUTARY TO THE FACILITIES, AND THE FOREBAY A MINIMUM OF TWICE A YEAR, IN THE SPRING AND FALL AND AFTER RUNOFF EVENTS TO ENSURE THEY ARE NOT CLOGGED FROM TRASH, DEBRIS OR SEDIMENT.
- THE PROPERTY OWNER OR THEIR DESIGNEE SHALL VISUALLY INSPECT ALL VEGETATED AREAS A MINIMUM OF TWICE A YEAR, IN THE SPRING AND FALL, AND AFTER RUNOFF EVENTS TO ENSURE THE AREA IS COVERED BY AT LEAST 70% COVER AND THERE IS NO EROSION.

OPERATION & MAINTENANCE PROCEDURES
- THE PROPERTY OWNER OR THEIR DESIGNEE SHOULD REMOVE ALL TRASH, DEBRIS AND SEDIMENT FROM THE STORM SEWERS, FOLLOWING CURRENT RECYCLING PROCEDURES. THIS CAN BE ACCOMPLISHED BY HAND OR WITH THE USE OF A HIGH PRESSURE WATER STREAM OR EQUIVALENT MEANS TO ALLOW CLEAN STORMWATER TO REACH THE STORMWATER FACILITIES.
- THE PROPERTY OWNER OR THEIR DESIGNEE SHOULD REMOVE ALL TRASH, DEBRIS AND SEDIMENT FROM THE FOREBAY, FOLLOWING CURRENT RECYCLING PROCEDURES. THIS CAN BE ACCOMPLISHED BY HAND OR WITH A MACHINE, HOWEVER NO HEAVY EQUIPMENT SHALL BE DRIVEN IN THE FOREBAY AND ALL DISTURBED AREAS SHALL BE IMMEDIATELY SEEDED AND EROSION NETTED.
- IF THE REQUIRED 70% VEGETATIVE COVER IS NOT MET THE PROPERTY OWNER OR THEIR DESIGNEE SHOULD PERFORM A SOILS TEST AND REEVALUATE THE SEED SELECTION USED ON THE PROPERTY. A MEADOW MIX THAT IS CAPABLE OF SUSTAINING PERIODIC INUNDATION SHOULD BE USED WITH AN ANNUAL RYE COMPANION CROP. THE SPARSE AREAS SHOULD BE IMMEDIATELY SEEDED AND MULCHED. IF THE SEASON PREVENTS RESEEDING, MULCH OR EROSION NETTING IS AN EFFECTIVE TEMPORARY COVER.
- IF THERE IS EROSION IN THE FOREBAY, THE SOIL SHALL BE REPLACED WITH A MINIMUM OF 6 INCHES OF TOPSOIL AND THE AREA SHOULD BE IMMEDIATELY SEEDED AND MULCHED. IF THE SEASON PREVENTS RESEEDING, MULCH OR EROSION NETTING IS AN EFFECTIVE TEMPORARY COVER. IF THE EROSION CONTINUES TO OCCUR IN THE SAME LOCATION THE PROPERTY OWNER OR THEIR DESIGNEE SHALL CONTACT AN ENGINEER TO DETERMINE AN ACCEPTABLE SOLUTION.
- THE PROPERTY OWNER OR THEIR DESIGNEE SHOULD MOW THE FOREBAY ONCE OR TWICE A YEAR.
- THE PROPERTY OWNER OR THEIR DESIGNEE SHOULD WATER THE FOREBAY AS NECESSARY BASED ON WEATHER CONDITIONS. DURING THE SUMMER WHEN RAIN IS SPARSE THE FOREBAY SHOULD BE WATERED ONCE A WEEK. DURING THE SPRING AND FALL WHEN RAIN IS ABUNDANT THE FOREBAY WILL NOT NEED TO BE WATERED. THE FOREBAY SHOULD BE WATERED TO ENSURE THE VEGETATION IS NOT ALLOWED TO BURN OR TURN BROWN.
- THE PROPERTY OWNER OR THEIR DESIGNEE SHOULD PROHIBIT VEHICLES FROM BEING PARKED OR DRIVEN IN THE FOREBAY, CARE SHOULD BE TAKEN TO AVOID EXCESSIVE COMPACTION BY MOWERS.
- THE PROPERTY OWNER OR THEIR DESIGNEE SHOULD ALSO INSPECT FOR DAMAGE TO OUTLET CONTROL STRUCTURES, EROSION CONTROL MEASURES, SIGNS OF WATER CONTAMINATION/SPILLS AND SLOPE STABILITY IN THE BERMS. IF ANY ISSUES ARE ENCOUNTERED THEY SHOULD CONTACT AN ENGINEER TO DETERMINE AN ACCEPTABLE SOLUTION.

RIPRAP STABILIZATION

RIPRAP SHOULD BE KEPT CLEAN FROM DEBRIS AND SEDIMENT TO ENSURE ADEQUATE VOID SPACE IS PROVIDED FROM STORMWATER DISSIPATION. ALL RIPRAP SHOULD BE EVENLY DISTRIBUTED AND NO EROSION SHOULD BE OCCURRING AROUND OR BELOW THE RIPRAP..

INSPECTION SCHEDULE
- THE PROPERTY OWNER OR THEIR DESIGNEE SHALL VISUALLY INSPECT ALL RIPRAP A MINIMUM OF TWICE A YEAR, IN THE SPRING AND FALL, AND AFTER RUNOFF EVENTS TO ENSURE THEY ARE NOT CLOGGED FROM DEBRIS OR SEDIMENT, DISPLACED OR EROSION IS OCCURRING.

OPERATION & MAINTENANCE PROCEDURES
- THE PROPERTY OWNER OR THEIR DESIGNEE SHOULD REMOVE ALL DEBRIS AND SEDIMENT FROM THE RIPRAP, FOLLOWING CURRENT RECYCLING PROCEDURES. THIS CAN BE ACCOMPLISHED BY HAND, MACHINE OR WITH THE USE OF A COMMERCIAL VACUUM.
- THE PROPERTY OWNER OR THEIR DESIGNEE SHOULD REPLACE ALL RIPRAP THAT HAS BEEN DISPLACED TO ENSURE EVEN DISTRIBUTION. IF RIPRAP SINKS INTO THE GROUND ADDITIONAL RIPRAP SHOULD BE PLACED TO ENSURE DISSIPATION OF STORMWATER FLOWS.
- THE PROPERTY OWNER OR THEIR DESIGNEE SHOULD REPLACE ANY ERODED AREAS WITH GEOTEXTILE AND TOPSOIL OR RIPRAP TO STOP THE EROSION FROM CONTINUING. ALL TOPSOILED AREAS SHOULD BE IMMEDIATELY STABILIZED WITH GRASS SEED AND MULCH OR EROSION NETTING.

SOIL AMENDMENT

- AMENDED SOILS SHOULD BE KEPT CLEAN FROM DEBRIS, SEDIMENT AND COMPACTION TO ENSURE ADEQUATE VOID SPACE IS PROVIDED. VEGETATION SHALL BE MAINTAINED ON AMENDED SOILS AREAS.

INSPECTION SCHEDULE
- THE PROPERTY OWNER OR THEIR DESIGNEE SHALL VISUALLY INSPECT ALL AMENDED SOILS A MINIMUM OF TWICE A YEAR, IN THE SPRING AND FALL, AND AFTER RUNOFF EVENTS TO ENSURE THEY ARE NOT CLOGGED FROM DEBRIS OR SEDIMENT, COMPACTED AND ARE WELL VEGETATED.
- THE PROPERTY OWNER OR THEIR DESIGNEE SHALL VISUALLY INSPECT ALL AMENDED SOILS A MINIMUM OF TWICE A YEAR, IN THE SPRING AND FALL, AND AFTER RUNOFF EVENTS TO ENSURE THE AREA IS COVERED BY AT LEAST 70% COVER AND THERE IS NO EROSION.

OPERATION & MAINTENANCE PROCEDURES
- THE PROPERTY OWNER OR THEIR DESIGNEE SHOULD REMOVE ALL DEBRIS AND SEDIMENT FROM THE AMENDED SOILS, FOLLOWING CURRENT RECYCLING PROCEDURES. THIS CAN BE ACCOMPLISHED BY HAND OR WITH A MACHINE. NO HEAVY EQUIPMENT SHOULD BE DRIVEN ON THE AMENDED SOILS. IF SIGNIFICANT SEDIMENT HAS ENTERED THE AMENDED SOILS OR THEY HAVE BECOME COMPACTED BY USE OR SETTLING THEY SHOULD BE REPLACED FOLLOWING THE SOIL AMENDMENT DETAILS AND NOTES ON THE APPROVED PCSM PLANS. ALL DISTURBED AREAS SHOULD BE IMMEDIATELY STABILIZED WITH GRASS SEED AND MULCH OR EROSION MATTING.
- THE PROPERTY OWNER OR THEIR DESIGNEE SHOULD REPLACE ANY ERODED AREAS WITH EROSION CONTROL MATTING AND AMENDED SOILS FOLLOWING THE SOIL AMENDMENT DETAILS AND NOTES ON THE APPROVED PCSM PLANS TO STOP THE EROSION FROM CONTINUING. ALL DISTURBED AREAS SHOULD BE IMMEDIATELY STABILIZED WITH GRASS SEED AND MULCH.
- THE PROPERTY OWNER OR THEIR DESIGNEE SHOULD PROHIBIT VEHICLES FROM BEING PARKED OR DRIVEN IN THE AMENDED SOILS, CARE SHOULD BE TAKEN TO AVOID EXCESSIVE COMPACTION BY MOWERS.
- THE PROPERTY OWNER SHALL NOT INSTALL DECKS, PATIOS, BUILDING ADDTIONS OR SIMILAR IN AMENDED SOIL AREAS AS SHOWN ON THE PCSM PLANS.

UNDERGROUND INFILTRATION TRENCH

UNDERGROUND INFILTRATION TRENCHES SHOULD BE KEPT CLEAN FROM DEBRIS AND SEDIMENT TO ENSURE THE SOILS BENEATH ARE NOT ALLOWED TO BE SILTED UP OR COMPACTED AND TO ENSURE THEY DRAIN WITHIN A 72 HOUR PERIOD AND MAINTAIN THE REQUIRED STORAGE VOLUME.

INSPECTION SCHEDULE
- THE PROPERTY OWNER OR THEIR DESIGNEE SHALL VISUALLY INSPECT ALL INLETS AND STORM SEWERS TRIBUTARY TO THE FACILITIES, AND THE UNDERGROUND TRENCH A MINIMUM OF TWICE A YEAR, IN THE SPRING AND FALL.
- THE PROPERTY OWNER OR THEIR DESIGNEE SHALL VISUALLY INSPECT ALL INLETS AND STORM SEWERS TRIBUTARY TO THE FACILITIES, AND THE UNDERGROUND BASIN AFTER HEAVY RAIN EVENTS.
- THE PROPERTY OWNER OR THEIR DESIGNEE SHALL VISUALLY INSPECT ALL OVERLYING STONE ABOVE THE INFILTRATION FACILITY A MINIMUM OF TWICE A YEAR, IN THE SPRING AND FALL, AND AFTER HEAVY RAIN EVENTS.

OPERATION & MAINTENANCE PROCEDURES
- THE PROPERTY OWNER OR THEIR DESIGNEE SHOULD REMOVE ALL TRASH AND DEBRIS FROM THE INLET GRATE AND SUMP AND OUTLET STRUCTURE, FOLLOWING CURRENT RECYCLING PROCEDURES, A MINIMUM OF 2 TIMES PER YEAR AND AFTER HEAVY RAIN EVENTS. THIS CAN BE ACCOMPLISHED BY HAND OR WITH THE USE OF A COMMERCIAL VACUUM.
- THE PROPERTY OWNER OR THEIR DESIGNEE SHOULD REMOVE ALL TRASH AND DEBRIS FROM THE STORM SEWERS, FOLLOWING CURRENT RECYCLING PROCEDURES, A MINIMUM OF 2 TIMES PER YEAR AND AFTER HEAVY RAIN EVENTS. THIS CAN BE ACCOMPLISHED BY HAND OR WITH THE USE OF A HIGH PRESSURE WATER STREAM OR EQUIVALENT MEANS TO ALLOW CLEAN STORMWATER TO REACH THE STORMWATER FACILITIES.
- THE PROPERTY OWNER OR THEIR DESIGNEE SHOULD REMOVE ALL TRASH AND DEBRIS FROM THE UNDERGROUND TRENCH THROUGH THE CLEANOUTS, FOLLOWING CURRENT RECYCLING PROCEDURES, A MINIMUM OF 2 TIMES PER YEAR AND AFTER HEAVY RAIN EVENTS. THIS CAN BE ACCOMPLISHED BY HAND OR WITH THE USE OF A HIGH PRESSURE WATER STREAM OR EQUIVALENT MEANS TO ALLOW CLEAN STORMWATER TO REACH THE STORMWATER FACILITIES.
- THE PROPERTY OWNER OR THEIR DESIGNEE SHOULD MAINTAIN THE SURROUNDYING VEGETATION IN GOOD CONDITION, AND ANY BARE SPOTS RE-VEGETATED AS SOON AS POSSIBLE.
- THE PROPERTY OWNER OR THEIR DESIGNEE SHOULD PROHIBIT VEHICULAR ACCESS ON SUBSURFACE INFILTRATION AREAS, AND CARE SHOULD BE TAKEN TO AVOID EXCESSIVE COMPACTION BY MOWERS. IF ACCESS IS NEEDED, USE OF PERMEABLE, TURF REINFORCEMENT SHOULD BE CONSIDERED.
- THE PROPERTY OWNER OR THEIR DESIGNEE SHOULD ENSURE ALL INFLOW AND OUTFLOW POINTS INTO THE INDIVIDUAL ROOF DRAINS SHOULD BE KEPT CLEAR OF LEAVES AND OTHER DEBRIS. ANY LEAVES OR DEBRIS WILL NEGATIVELY IMPACT THE PERFORMANCE OF THESE SYSTEMS. ALL DOWNSPOUTS AND OVERFLOW PIPES SHOULD BE KEPT IN GOOD WORKING ORDER.
- THE PROPERTY OWNER OR THEIR DESIGNEE SHOULD ENSURE THE FACILITY IS FUNCTIONING PROPERLY AND THE WATER IS INFILTRATING INTO THE GROUND. IF THE FACILITY IS NO LONGER INFILTRATING WATER IT IS PROBABLE THAT THE GROUND BENEATH THE FACILITY HAS BEEN CLOGGED WITH SILT OR COMPACTED AND THE FACILITY WILL NEED TO BE REMOVED AND THE SOILS BENEATH THE FACILITY SHOULD BE AMENDED, AND THE FACILITY RE-INSTALLED TAKING SPECIAL CARE TO AVOID COMPACTION AND SILTING UP OF THE BOTTOM.

PROTECT EXISTING TREES/PROPOSED TREES

ALL PROTECTED WOODED AREAS SHALL REMAIN IN THEIR NATURAL STATE SHALL NOT BE DISTURBED.

INSPECTION SCHEDULE
- THE PROPERTY OWNER OR THEIR DESIGNEE SHALL VISUALLY INSPECT ALL WOODED AREAS AND PROPOSED TREES A MINIMUM OF TWICE A YEAR, IN THE SPRING AND FALL, TO ENSURE NO PROHIBITED ACTIVITIES ARE OCCURRING INCLUDING REMOVAL OF TREES, DUMPING OF TRASH OR EROSION OF SOILS.

OPERATION & MAINTENANCE PROCEDURES
- THE PROPERTY OWNER OR THEIR DESIGNEE SHOULD RETURN ANY WOODED AREAS TO THEIR NATURAL CONDITION IMMEDIATELY SHOULD THEY FIND ANY ILLEGAL DISTURBANCE BY PLANTING NATIVE TREES.
- THE PROPERTY OWNER OR THEIR DESIGNEE SHOULD REMOVE ANY FOREIGN TRASH OR DEBRIS FROM THE WOODED AREAS.
- THE PROPERTY OWNER OF THEIR DESIGNEE SHALL REPAIR ANY EROSION FOUND WITHIN THE WOODED AREAS. THE REPAIRS SHOULD INCLUDE PLACING TOPSOIL IN ERODED AREAS AND IMMEDIATELY STABILIZING WITH EROSION CONTROL MATTING AND PERMANENT SEEDING.
- THE PROPERTY OWNER OF THEIR DESIGNEE SHALL REMOVE ANY INVASIVE SPECIES FOUND WITHIN THE WOODED AREAS. REMOVAL OF INVASIVE SPECIES MAY BE COMPLETED BY SEVERAL METHODS, INCLUDING HAND REMOVAL, SPOT SPRAYING USING AN ENVIRONMENTALLY SAFE HERBICIDE OR OTHER METHODS WITH EXPRESS AUTHORIZATION BY DEP.
- THE PROPERTY OWNER SHALL REPLACE ALL PROPOSED TREES IN KIND SHOULD THEY DIE. THIS SHALL BE COMPLETED BY FOLLOWING THE LANDSCAPE PLANTING DETAILS.

DISCONNECT ROOF LEADERS TO VEGETATED AREAS

ALL PROTECTED ROOF LEADERS SHALL DISCHARGE OVER VEGETATED AREAS AND SHALL NOT BE PIPED TO STORMWATER BASINS OR INTO STORM SEWERS.

INSPECTION SCHEDULE
- THE PROPERTY OWNER OR THEIR DESIGNEE SHALL VISUALLY INSPECT ALL ROOF DRAINS A MINIMUM OF TWICE A YEAR, IN THE SPRING AND FALL, TO ENSURE NO PROHIBITED ACTIVITIES ARE OCCURRING INCLUDING PIPING THEM TO STORM SEWER SYSTEMS, DIRECTLY INTO STORMWATER BASINS OR PIPING THEM TO WETLANDS OR WATERCOURSES.
- THE PROPERTY OWNER OR THEIR DESIGNEE SHALL VISUALLY INSPECT ALL DOWNSLOPE AREAS FROM ROOF DRAINS A MINIMUM OF TWICE A YEAR, IN THE SPRING AND FALL, TO ENSURE NO EROSION IS OCCURRING.

OPERATION & MAINTENANCE PROCEDURES
- THE PROPERTY OWNER OR THEIR DESIGNEE SHOULD DISCONNECT THE ROOF LEADERS IMMEDIATELY SHOULD THEY FIND ANY ILLEGAL PIPING SYSTEMS. THE PIPING SYSTEM SHALL BE REMOVED IMMEDIATELY TO PREVENT FUTURE CONNECTIONS.
- THE PROPERTY OWNER OR THEIR DESIGNEE SHALL REPAIR ANY EROSION FOUND DOWNSLOPE OF THE ROOF DRAINS. THE REPAIRS SHOULD INCLUDE PLACING TOPSOIL IN ERODED AREAS AND IMMEDIATELY STABILIZING WITH EROSION CONTROL MATTING AND PERMANENT SEEDING.

DISCONNECT NON-ROOF IMPERVIOUS

ALL PROTECTED NON ROOF IMPERVIOUS SHALL DISCHARGE OVER VEGETATED AREAS AND SHALL NOT BE PIPED TO STORMWATER BASINS OR INTO STORM SEWERS.

INSPECTION SCHEDULE
- THE PROPERTY OWNER OR THEIR DESIGNEE SHALL VISUALLY INSPECT ALL NON ROOF IMPERVIOUS A MINIMUM OF TWICE A YEAR, IN THE SPRING AND FALL, TO ENSURE NO PROHIBITED ACTIVITIES ARE OCCURRING INCLUDING PIPING THEM TO STORM SEWER SYSTEMS, DIRECTLY INTO STORMWATER BASINS OR PIPING THEM TO WETLANDS OR WATERCOURSES.
- THE PROPERTY OWNER OR THEIR DESIGNEE SHALL VISUALLY INSPECT ALL DOWNSLOPE AREAS FROM IMPERVIOUS SURFACES A MINIMUM OF TWICE A YEAR, IN THE SPRING AND FALL, TO ENSURE NO EROSION IS OCCURRING.

OPERATION & MAINTENANCE PROCEDURES
- THE PROPERTY OWNER OR THEIR DESIGNEE SHOULD DISCONNECT THE NON-ROOF IMPERVIOUS IMMEDIATELY SHOULD THEY FIND ANY ILLEGAL PIPING SYSTEMS. THE PIPING SYSTEM SHALL BE REMOVED IMMEDIATELY TO PREVENT FUTURE CONNECTIONS.
- THE PROPERTY OWNER OR THEIR DESIGNEE SHALL REPAIR ANY EROSION FOUND DOWNSLOPE OF THE IMPERVIOUS SURFACES. THE REPAIRS SHOULD INCLUDE PLACING TOPSOIL IN ERODED AREAS AND IMMEDIATELY STABILIZING WITH EROSION CONTROL MATTING AND PERMANENT SEEDING.

MINIMIZE TOTAL DISTURBED AREAS

AREAS TO REMAIN IN THEIR NATURAL STATE SHALL NOT BE DISTURBED WITHOUT THE EXPRESSED AUTHORIZATION FROM DEP.

INSPECTION SCHEDULE
- THE PROPERTY OWNER OR THEIR DESIGNEE SHALL VISUALLY INSPECT ALL NATURAL AREAS A MINIMUM OF TWICE A YEAR, IN THE SPRING AND FALL, TO ENSURE NO PROHIBITED ACTIVITIES ARE OCCURRING.

OPERATION & MAINTENANCE PROCEDURES
- THE PROPERTY OWNER OR THEIR DESIGNEE SHOULD RETURN ANY NATURAL AREAS TO THEIR NATURAL CONDITION IMMEDIATELY SHOULD THEY FIND ANY ILLEGAL DISTURBANCE.

PROTECT SENSITIVE/SPECIAL VALUE FEATURES (NATURAL AREA CONSERVATION)

AREAS TO REMAIN IN THEIR NATURAL STATE SHALL NOT BE DISTURBED WITHOUT THE EXPRESSED AUTHORIZATION FROM DEP.

INSPECTION SCHEDULE
- THE PROPERTY OWNER OR THEIR DESIGNEE SHALL VISUALLY INSPECT ALL NATURAL AREAS A MINIMUM OF TWICE A YEAR, IN THE SPRING AND FALL, TO ENSURE NO PROHIBITED ACTIVITIES ARE OCCURRING.

OPERATION & MAINTENANCE PROCEDURES
- THE PROPERTY OWNER OR THEIR DESIGNEE SHOULD RETURN ANY NATURAL AREAS TO THEIR NATURAL CONDITION IMMEDIATELY SHOULD THEY FIND ANY ILLEGAL DISTURBANCE.

PERVIOUS PAVEMENT

PERVIOUS PAVEMENT SHOULD BE KEPT CLEAN TO PREVENT THE PAVEMENT SURFACE AND UNDERLYING STONE FROM BEING CLOGGED WITH FINE SEDIMENTS.

INSPECTION SCHEDULE
* THE PROPERTY OWNER OR THEIR DESIGNEE SHALL VISUALLY INSPECT ALL PERVIOUS PAVEMENT A MINIMUM OF TWICE A YEAR, IN THE SPRING AND FALL, AND AFTER RUNOFF EVENTS, TO ENSURE THE PERVIOUS PAVEMENT IS NOT CLOGGED WITH TRASH, DEBRIS OR SEDIMENT.
* THE PROPERTY OWNER OR THEIR DESIGNEE SHALL VISUALLY INSPECT ALL TRIBUTARY AREAS TO PERVIOUS PAVEMENT A MINIMUM OF TWICE A YEAR, IN THE SPRING AND FALL, AND AFTER RUNOFF EVENTS, TO ENSURE THE AREA IS COVERED BY AT LEAST 70% COVER AND THERE IS NO EROSION.
* THE PROPERTY OWNER OR THEIR DESIGNEE SHALL VISUALLY INSPECT ALL PERVIOUS PAVEMENT A MINIMUM OF TWICE A YEAR, IN THE SPRING AND FALL, AND AFTER RUNOFF EVENTS, TO ENSURE THE PERVIOUS PAVEMENT IS DRAINING AND NOT HOLDING WATER.

OPERATION & MAINTENANCE PROCEDURES
* THE PROPETY OWNER OR THEIR DESIGNEE SHALL REMOVE ALL TRASH, DEBRIS OR SEDIMENT FROM THE PERVIOUS PAVEMENT. THIS CAN BE ACCOMPLISHED BY HAND OR WITH THE USE OF A COMMERCIAL VACUUM ON A BIANNUAL BASIS. PAVEMENT WASHING SYSTEMS OR COMPRESSED AIR UNITS ARE NOT RECOMMENDED.
* IF THE VEGETATED TRIBUTARY AREAS TO THE PERVIOUS PAVEMENT ARE NOT COVERED BY 70% VEGETATIVE COVER THE PROPERTY OWNER OR THEIR DESIGNEE SHALL PERFORM A SOILS TEST AND REEVALUATE THE SEED SELECTION USED ON THE PROPERTY. A SEED SELECTION APPROPRIATE FOR THE SOILS SHALL BE IMMEDIATELY PLANTED AND MULCHED ALONG WITH WITH AN ANNUAL RYE COMPANION CROP TO PROMOTE QUICK STABILIZATION OF THE SPARSE AREAS. IF THE SEASON PREVENTS RE-SEEDING, MULCH OR EROSION NETTING IS AN EFFECTIVE TEMPORARY COVER.
* IF THE VEGETATED TRIBUTARY AREAS HAVE EROSION THE SOIL SHALL BE REPLACED WITH A MINIMUM OF 6 INCHES OF TOPSOIL AND THE AREA SHOULD BE IMMEDIATELY SEEDED AND MULCHED. IF THE SEASON PREVENTS RE-SEEDING, MULCH OR EROSION NETTING IS AN EFFECTIVE TEMPORARY COVER. IF THE EROSION CONTINUES TO OCCUR IN THE SAME LOCATION THE PROPERTY OWNER OR THEIR DESIGNEE SHALL CONTACT AN ENGINEER TO DETERMINE AN ACCEPTABLE SOLUTION.
* SUPERFICIAL DIRT DOES NOT NECESSARILY CLOG THE PAVEMENT VOIDS. HOWEVER, DIRT THAT IS GROUND IN REPEATEDLY BY TIRES CAN LEAD TO CLOGGING. THEREFORE, TRUCKS, HEAVY VEHICLES, BICYCLES AND OTHER MODES OF TRANSPORTATION SHOULD BE PREVENTED FROM TRACKING OR SPILLING DIRT ONTO THE PAVEMENT. FURTHERMORE, ALL CONSTRUCTION OR HAZARDOUS MATERIALS CARRIERS SHOULD BE PROHIBITED FROM ENTERING PERVIOUS PAVEMENT.
* CONSTRUCTION STAGING, SOIL/MULCH STORAGE, ETC. SHALL NOT BE COMPELTED ON UNPROTECTED PERVIOUS PAVEMENT.
* WINTER MAINTENANCE FOR PERVIOUS PAVEMENT MAY BE NECESSARY BUT IS USUALLY LESS INTENSIVE THAN THAT REQUIRED FOR A STANDARD IMPERVIOUS SURFACE. BY ITS VERY NATURE, A PERVIOUS PAVEMENT SYSTEM WITH SUBSURFACE AGGREGATE BED HAS SUPERIOR SNOW MELTING CHARACTERISTICS THAN STANDARD PAVEMENT. THE UNDERLYING STONE BED TENDS TO ABSORB AND RETAIN HEAT SO THAT FREEZING RAIN AND SNOW MELT FASTER ON PERVIOUS PAVEMENT. THEREFORE, ICE AND LIGHT SNOW ACCUMULATION ARE GENERALLY NOT AS PROBLEMATIC. HOWEVER, SNOW WILL ACCUMULATE DURING HEAVIER STORMS. ABRASIVES SUCH AS SAND OR CINDERS SHOULD NOT BE APPLIED ON OR ADJACENT TO THE PERVIOUS PAVEMENT. SNOW PLOWING IS FINE, PROVIDED IT IS DONE CAREFULLY (I.E. BY SETTING THE BLADE SLIGHTLY HIGHER THAN USUAL, ABOUT AN INCH). SALT IS ACCEPTABLE FOR USE AS A DEICER ON THE PERVIOUS PAVEMENT, THOUGH NONTOXIC, ORGANIC DEICERS, APPLIED EITHER AS BLENDED, MAGNESIUM CHLORIDE-BASED LIQUID PRODUCTS OR AS PRETREATED SALT, ARE PREFERABLE.
* IF SEDIMENT HAS COLLECTED IN THE PERVIOUS PAVEMENT AND ELIMINATED ITS ABILITY TO ABSORD STORMWATER AND A COMMERCIAL VACUUM IS UNABLE TO REVITALIZE ITS INFILTRATION CAPABILITIES. THE PERVIOUS PAVEMENT SHALL BE REMOVED AND REPLACED. DURING ITS REMOVAL THE STONE BED SHOULD BE ANALYZED TO DETERMINE IF SEDIMENT HAS CLOGGED THE STONE. IF IT IS DETERMINED THAT THE STONE IS CLOGGED IT SHALL BE REMOVED, WASHED CLEAN AND REPLACED BEFORE PAVING THE PERVIOUS PAVEMENT ABOVE.
* POTHOLES IN PERVIOUS PAVEMENT ARE UNLIKELY; THOUGH SETTLING MIGHT OCCUR IF A SOFT SPOT IN THE SUBGRADE IS NOT REMOVED DURING CONSTRUCTION. FOR DAMAGED AREAS A DECLIVITY SHALL BE PATCHED BY PERVIOUS PAVEMENT AFTER REPAIRING THE SUBGRADE TO ENSURE LONG TERM FUNCTIONING OF THE PAVEMENT. UNDER NO CIRCUMSTANCE SHOULD THE PAVEMENT SURFACE EVER BE SEAL COATED.

BIO-RETENTION BASIN CONSTRUCTION SEQUENCE

CONVERSION OF THE BASIN SHOULD NOT COMMENCE UNTIL ALL TRIBUTARY AREAS HAVE BEEN STABILIZED PER THE STABILIZATION CRITERIA.

1. INSTALL TEMPORARY SEDIMENT CONTROL BMPS AS SHOWN ON THE PLANS.
2. COMPLETE SITE GRADING.
3. STABILIZE GRADING WITHIN THE LIMIT OF DISTURBANCE EXCEPT WITHIN THE BASIN AREA.
4. AFTER ENTIRE TRIBUTARY AREA HAS BEEN STABILIZED, BEGIN EXCAVATION OF BASIN TO PROPOSED INVERT DEPTH AND SCARIFY THE EXISTING SOIL SURFACES. DO NOT COMPACT IN-SITU SOILS.
5. BACKFILL BASIN WITH AMENDED SOIL AS SHOWN ON PLANS AND SPECIFICATIONS. OVERFILLING IS RECOMMENDED TO ACCOUNT FOR SETTLEMENT. LIGHT HAND TAMPING IS ACCEPTABLE IF NECESSARY.
6. PRESOAK THE PLANTING SOIL PRIOR TO PLANTING VEGETATION TO AID IN SETTLEMENT.
7. COMPLETE FINAL GRADING TO ACHIEVE PROPOSED DESIGN ELEVATIONS, LEAVING SPACE FOR UPPER LAYER OF COMPOST, MULCH OR TOPSOIL AS SPECIFIED ON PLANS.
8. PLANT VEGETATION ACCORDING TO PLANTING PLAN.
9. MULCH AND INSTALL EROSION PROTECTION AT SURFACE FLOW ENTRANCES WHERE NECESSARY.

CONSTRUCTION SEQUENCE (INFILTRATION BASIN/RECHARGE AREA)

CONVERSION OF THE BASIN SHOULD NOT COMMENCE UNTIL ALL TRIBUTARY AREAS HAVE BEEN STABILIZED PER THE STABILIZATION CRITERIA.

1. PROTECT INFILTRATION BASIN AREA FROM COMPACTION PRIOR TO INSTALLATION.
2. IF POSSIBLE, INSTALL INFILTRATION BASIN DURING LATER PHASES OF SITE CONSTRUCTION TO PREVENT SEDIMENTATION AND/OR DAMAGE FROM CONSTRUCTION ACTIVITY. AFTER INSTALLATION, PREVENT SEDIMENT-LADEN WATER FROM ENTERING INLETS AND PIPES.
3. INSTALL AND MAINTAIN PROPER EROSION AND SEDIMENT CONTROL MEASURES DURING CONSTRUCTION.
4. IF NECESSARY, EXCAVATE INFILTRATION BASIN BOTTOM TO AN UNCOMPACTED SUBGRADE FREE FROM ROCKS AND DEBRIS. DO NOT COMPACT SUBGRADE.
5. INSTALL OUTLET CONTROL STRUCTURES.
6. SEED AND STABILIZE TOPSOIL. (VEGETATE IF APPROPRIATE WITH NATIVE PLANTINGS)
7. DO NOT REMOVE INLET PROTECTION OR OTHER EROSION AND SEDIMENT CONTROL MEASURES UNTIL SITE IS FULLY STABILIZED.

CONSTRUCTION SEQUENCE (LANDSCAPE RESTORATION)

1. SOIL CONDITIONS SHALL BE TESTED PRIOR TO PLANTING AND TREATED WITH APPROPRIATE INGREDIENTS TO BALANCE THE PH.
2. PLANT MATERIAL SHALL BE OF NURSERY STOCK, BALLED AND BURLAPPED. IT SHALL BE OF SYMMETRICAL GROWTH, TYPICAL OF ITS SPECIES OR VARIETY, FREE OF INSECTS, PESTS AND DISEASE, HAVE A NORMAL GROWTH HABIT, VIGOROUS ROOT SYSTEM AND DURABLE.
3. TREES AND OTHER PLANT MATERIAL SHALL NOT BE PLANTED UNTIL FINISH GRADING HAS BEEN COMPLETED.
4. SCARIFY ANY COMPACTED SUBSOILS AT BOTTOM AND SIDES OF PLANTING PIT BEFORE INSTALLATION.
5. INSTALL TREE OR OTHER PLANT MATERIAL AND BACKFILL WITH 3 PARTS TOPSOIL AND 1 PART PEAT. LIGHTLY TAMP AND SOAK BACKFILL THOROUGHLY AFTER PLANTING.
6. INSTALL 3 INCHES OF MULCH AROUND PLANTING PIT. DO NOT PLACE MULCH AGAINST THE TRUNK OF THE TREE.
7. STAKE TREE AS NECESSARY WITH RUBBER HOSE LOOP AROUND TRUNK TO 2 INCH DIAMETER CEDAR STAKING.

CONSTRUCTION SEQUENCE (UNDERGROUND INFILTRATION TRENCH)

CONSTRUCTION OF THE PROPOSED INFILTRATION TRENCH SHOULD NOT COMMENCE UNTIL ALL TRIBUTARY AREAS HAVE BEEN STABILIZED PER THE STABILIZATION CRITERIA.

1. PROTECT INFILTRATION TRENCH AREA FROM COMPACTION PRIOR TO INSTALLATION.
2. IF POSSIBLE, INSTALL INFILTRATION TRENCH DURING LATER PHASES OF SITE CONSTRUCTION TO PREVENT SEDIMENTATION AND/OR DAMAGE FROM CONSTRUCTION ACTIVITY. AFTER INSTALLATION, PREVENT SEDIMENT LADEN WATER FROM ENTERING INLETS AND PIPES.
3. INSTALL AND MAINTAIN PROPER EROSION AND SEDIMENT CONTROL MEASURES DURING CONSTRUCTION.
4. EXCAVATE INFILTRATION TRENCH BOTTOM TO A UNIFORM, LEVEL UNCOMPACTED SUBGRADE FREE FROM ROCKS AND DEBRIS. DO NOT COMPACT SUBGRADE.
5. PLACE NONWOVEN GEOTEXTILE ALONG BOTTOM AND SIDES OF TRENCH*. NONWOVEN GEOTEXTILE ROLLS SHOULD OVERLAP BY A MINIMUM OF 16 INCHES WITHIN THE TRENCH. FOLD BACK AND SECURE EXCESS GEOTEXTILE DURING STONE PLACEMENT.
6. INSTALL UPSTREAM AND DOWNSTREAM CONTROL STRUCTURES, CLEANOUTS, ETC.
7. PLACE UNIFORMLY GRADED, CLEAN-WASHED AGGREGATE IN 8-INCH LIFTS, LIGHTLY COMPACTING BETWEEN LIFTS.
8. INSTALL CONTINUOUSLY PERFORATED PIPE AS INDICATED ON PLANS. BACKFILL WITH UNIFORMLY GRADED, CLEAN-WASHED AGGREGATE IN 8-INCH LIFTS, LIGHTLY COMPACTING BETWEEN LIFTS.
9. FOLD AND SECURE NONWOVEN GEOTEXTILE OVER INFILTRATION TRENCH, WITH MINIMUM OVERLAP OF 16-INCHES.
10. PLACE 4-INCH LIFT OF RIVER GRAVEL OVER INFILTRATION TRENCH, AS INDICATED ON PLANS.
11. SEED AND STABILIZE TOPSOIL DISTURBED DURING CONSTRUCTION.
12. DO NOT REMOVE INLET PROTECTION OR OTHER EROSION AND SEDIMENT CONTROL MEASURES UNTIL SITE IS FULLY STABILIZED.
13. ANY SEDIMENT THAT ENTERS INLETS DURING CONSTRUCTION IS TO BE REMOVED WITHIN 24 HOURS.

CONSTRUCTION SEQUENCE (PERVIOUS PAVEMENT)

CONSTRUCTION OF THE PROPOSED PERVIOUS PAVEMENT SHOULD NOT COMMENCE UNTIL ALL TRIBUTARY AREAS HAVE BEEN STABILIZED PER THE STABILIZATION CRITERIA.

1. DUE TO THE NATURE OF CONSTRUCTION SITES, PERVIOUS PAVEMENT AND OTHER INFILTRATION MEASURES SHOULD BY INSTALLED TOWARD THE END OF THE CONSTRUCTION PERIOD, IF POSSIBLE. INFILTRATION BEDS UNDER PERVIOUS PAVEMENT MAY BE USED AS TEMPORARY SEDIMENT BASINS OR TRAPS PROVIDED THAT THEY ARE NOT EXCAVATED TO WITHIN 12 INCHES OF THE DESIGNATED BED BOTTOM ELEVATION. ONCE THE SITE IS STABILIZED AND SEDIMENT STORAGE IS NO LONGER REQUIRED, THE BED IS EXCAVATED TO THE ITS FINAL GRADE AND THE PERVIOUS PAVEMENT SYSTEM IS INSTALLED.
2. THE EXISTING SUBGRADE UNDER THE BED AREAS SHOULD NOT BE COMPACTED OR SUBJECT TO EXCESSIVE CONSTRUCTION EQUIPMENT TRAFFIC PRIOR TO GEOTEXTILE AND STONE BED PLACEMENT.
3. WHERE EROSION OF SUBGRADE HAS CAUSED ACCUMULATION OF FINE MATERIALS AND/OR SURFACE PONDING, THIS MATERIAL SHALL BE REMOVED WITH LIGHT EQUIPMENT AND THE UNDERLYING SOILS SCARIFIED TO A MINIMUM DEPTH OF 6 INCHES WITH A YORK RAKE (OR EQUIVALENT) AND LIGHT TRACTOR. ALL FINE GRADING SHALL BE DONE BY HAND. ALL BED BOTTOMS SHOULD BE AT A LEVEL GRADE.
4. EARTHEN BERMS (IF USED) BETWEEN INFILTRATION BEDS SHOULD BE LEFT IN PLACE DURING EXCAVATION THESE BERMS DO NOT REQUIRE COMPACTION IF PROVEN STABLE DURING CONSTRUCTION.
5. GEOTEXTILE AND BED AGGREGATE SHOULD BE PLACED IMMEDIATELY AFTER APPROVAL OF SUBGRADE PREPARATION. GEOTEXTILE SHOULD BE PLACED ACCORDANCE WITHIN MANUFACTURER'S STANDARDS AND RECOMMENDATIONS. ADJACENT STRIPS OF GEOTEXTILE ALSO BE SECURED AT LEAST 4 FT. OUTSIDE OF BED IN ORDER TO PREVENT ANY RUNOFF OR SEDIMENT FROM ENTERING THE STORAGE BED. THIS EDGE STRIP SHOULD REMAIN IN PLACE UNTIL ALL BARE SOILS CONTIGUOUS TO BEDS ARE STABILIZED AND VEGETATED. AS THE SITE IS FULLY STABILIZED, EXCESS GEOTEXTILE ALONG BED EDGES CAN BE CUT BACK TO BED EDGE.
6. CLEAN (WASHED) UNIFORMLY GRADED AGGREGATE IS PLACED IN THE BED IN 8-INCH LIFTS. EACH LAYER SHOULD BE LIGHTLY COMPACTED, WITH THE CONSTRUCTION EQUIPMENT KEPT OFF THE BED BOTTOM AS MUCH AS POSSIBLE. ONCE BED AGGREGATE IS INSTALLED TO THE DESIRED GRADE, A +/- 1 IN. LAYER OF CHOKER BASE COURSE (AASHTO #57) AGGREGATE SHOULD BE INSTALLED UNIFORMLY OVER THE SURFACE IN ORDER PROVIDE AN EVEN SURFACE FOR PAVING.
7. THE PERVIOUS PAVEMENT SHOULD BE INSTALLED IN ACCORDANCE WITH CURRENT STANDARDS. FURTHER INFORMATION CAN BE OBTAINED FROM THE APPROPRIATE ASSOCIATION.

THE FULL PERMEABILITY OF THE PAVEMENT SURFACE SHOULD BE TESTED BY APPLICATION OF CLEAN WATER AT THE RATE OF AT LEAST 5 GPM OVER THE SURFACE, USING A HOSE OR OTHER DISTRIBUTION DEVISE. ALL APPLIED WATER SHOULD INFILTRATE DIRECTLY WITHOUT PUDDLE FORMATION OR SURFACE RUNOFF

GENERAL NOTES:

1. THE OPERATOR SHALL REMOVE FROM THE SITE, RECYCLE, OR PROPERLY DISPOSE OF ALL BUILDING MATERIAL AND WASTES IN ACCORDANCE WITH THE DEPARTMENT'S SOLID WASTE MANAGEMENT REGULATIONS AT 25 PA. CODE 260.1 ET SEQ., 271.1 ET SEQ., AND 287.1 ET SEQ. THE CONTRACTOR SHALL NOT BURY, DUMP, OR DISCHARGE ANY BUILDING MATERIAL WASTES AT THE SITE. EXPECTED CONSTRUCTION WASTE INCLUDE EXCESS SOIL MATERIALS, BUILDING MATERIALS, CONCRETE WASH WATER, SANITARY WASTES OR ANY MATERIAL THAT COULD IMPACT WATER QUALITY.

2. THERE ARE NO KNOWN GEOLOGIC FORMATIONS OR SOIL CONDITIONS THAT HAVE THE POTENTIAL TO CAUSE POLLUTION. IF ANY GEOLOGIC OR SOIL CONDITIONS ARE ENCOUNTERED THEY SHOULD CONTACT THE PLAN PREPARER AND CHESTER COUNTY CONSERVATION DISTRICT TO DETERMINE A ENVIRONMENTALLY SAFE METHOD TO DISPOSE OF THE MATERIALS.

3. ALL THE PROPOSED BMP'S ON THE SITE RESULT IN NO INCREASES IN THE RATE OF RUNOFF FROM THE PROPOSED DEVELOPMENT FOR THE 1-, 2-, 10-, 50-, AND 100-YEAR STORM EVENTS COMPARED TO PRE-CONSTRUCTION RATES UTILIZING THE SCS METHOD, AND MANAGING THE NET CHANGE FOR STORMS UP TO AND INCLUDING THE 2-YEAR/24-HOUR STORM EVENT UTILIZING THE SCS METHOD, WHEN COMPARED TO PRE-CONSTRUCTION RUNOFF VOLUME AND WATER QUALITY. THEREFORE THE INTEGRITY OF THE DOWNSTREAM STREAM CHANNELS WILL NOT BE NEGATIVELY IMPACTED. MANY NON-STRUCTURAL AND STRUCTURAL BMP'S ARE PROPOSED TO PREVENT CHANGES OR INCREASES IN STORMWATER RUNOFF FROM THE SITE, INCLUDING DISCONNECTING ROOF LEADERS FROM IMPERVIOUS SURFACES, DISCONNECTING NON-ROOF IMPERVIOUS SURFACES, PROPOSED LANDSCAPING AND TREES, BIO-RETENTION BASIN, INFILTRATION BASIN AND FOREBAYS. WATER QUALITY BMP'S WERE ALSO INCORPORATED INTO THE PCSM DESIGN, THEREFORE THE PHYSICAL, BIOLOGICAL AND CHEMICAL QUALITIES OF THE RECEIVING STREAMS WILL NOT BE NEGATIVELY IMPACTED. THE SITE WAS LAID OUT TO REQUIRE THE SMALLEST AMOUNT OF DISTURBANCE AND IMPERVIOUS SURFACES, AND APPROXIMATELY 3.6 ACRES OF OPEN SPACE IS INCLUDED WITH THIS PLAN. THE ROAD WIDTHS WERE REDUCED TO DECREASE IMPERVIOUS SURFACES. THE GRADING AND THE RESULTING REQUIRED LAND CLEARING ON THE SITE WAS COMPLETED TO DECREASE THE LIMITS OF DISTURBANCE AND SAVE WOODLANDS AT ALL POSSIBLE LOCATIONS, ALONG WITH PROTECTING AND UTILIZING EXISTING DRAINAGE FEATURES. THIS ENABLES THE STORMWATER FACILITIES TO BE SMALLER WHICH PROMOTES LAND PRESERVATION. DIRECTION IS GIVEN ON THE PCSM PLANS TO MINIMIZE SOIL COMPACTION THROUGHOUT THE SITE, EXCEPT FOR ROAD AND PARKING AREAS.

4. NPDES PERMIT NOTES
IF THE SITE WILL NEED TO IMPORT OR EXPORT MATERIAL FROM THE SITE, THE RESPONSIBILITY FOR PERFORMING ENVIRONMENTAL DUE DILIGENCE AND DETERMINATION OF CLEAN FILL WILL REST WITH THE DEVELOPER.
CLEAN FILL IS DEFINED AS: UNCONTAMINATED, NON-WATER SOLUBLE, NON-DECOMPOSABLE, INERT, SOLID MATERIAL. THE TERM INCLUDES SOIL, ROCK, STONE, DREDGED MATERIAL, USED ASPHALT, AND BRICK, BLOCK OR CONCRETE FROM CONSTRUCTION AND DEMOLITION ACTIVITIES THAT IS SEPARATE FROM OTHER WASTE AND IS RECOGNIZABLE AS SUCH. THE TERM DOES NOT INCLUDE MATERIALS PLACED IN OR ON THE WATERS OF THE COMMONWEALTH UNLESS OTHERWISE AUTHORIZED. (THE TERM "USED ASPHALT" DOES NOT INCLUDE MILLED ASPHALT OR ASPHALT THAT HAS BEEN PROCESSED FOR RE-USE).
CLEAN FILL AFFECTED BY A SPILL OR RELEASE OF A REGULATED SUBSTANCE: FILL MATERIALS AFFECTED BY A SPILL OR RELEASE OF A REGULATED SUBSTANCE STILL QUALIFIES AS CLEAN FILL PROVIDED THE TESTING REVEALS THAT THE FILL MATERIAL CONTAINS CONCENTRATIONS OF REGULATED SUBSTANCES THAT ARE BELOW THE RESIDENTIAL LIMITS IN TABLES FP-1A AND FP-1B FOUND IN THE DEPARTMENT'S POLICY "MANAGEMENT OF FILL".
ANY PERSON PLACING CLEAN FILL THAT HAS BEEN AFFECTED BY A SPILL OR RELEASE OF A REGULATED SUBSTANCE MUST USE FORM FP-001 TO CERTIFY THE ORIGIN OF THE FILL MATERIAL AND THE RESULTS OF THE ANALYTICAL TESTING TO QUALIFY THE MATERIAL AS CLEAN FILL. FORM FP-001 MUST BE RETAINED BY THE OWNER OF THE PROPERTY RECEIVING THE FILL. A COPY OF FORM FP-001 CAN BE FOUND AT THE END OF THESE INSTRUCTIONS.
ENVIRONMENTAL DUE DILIGENCE: THE APPLICANT MUST PERFORM ENVIRONMENTAL DUE DILIGENCE TO DETERMINE IF THE FILL MATERIALS ASSOCIATED WITH THE PROJECT QUALIFY AS CLEAN FILL. ENVIRONMENTAL DUE DILIGENCE IS DEFINED AS: INVESTIGATIVE TECHNIQUES, INCLUDING, BUT NOT LIMITED TO, VISUAL PROPERTY INSPECTIONS, ELECTRONIC DATA BASE SEARCHES, REVIEW OF PROPERTY OWNERSHIP, REVIEW OF PROPERTY USE HISTORY, SANBORN MAPS, ENVIRONMENTAL QUESTIONNAIRES, TRANSACTION SCREENS, ANALYTICAL TESTING, ENVIRONMENTAL ASSESSMENTS OR AUDITS. ANALYTICAL TESTING IS NOT A REQUIRED PART OF DUE DILIGENCE UNLESS VISUAL INSPECTION AND/OR REVIEW OF THE PAST LAND USE OF THE PROPERTY INDICATES THAT THE FILL MAY HAVE BEEN SUBJECTED TO A SPILL OR RELEASE OF REGULATED SUBSTANCE. IF THE FILL MAY HAVE BEEN AFFECTED BY A SPILL OR RELEASE OF A REGULATED SUBSTANCE, IT MUST BE TESTED TO DETERMINE IF IT QUALIFIES AS CLEAN FILL. TESTING SHOULD BE PERFORMED IN ACCORDANCE WITH APPENDIX A OF THE DEPARTMENT'S POLICY "MANAGEMENT OF FILL".
FILL MATERIAL THAT DOES NOT QUALIFY AS CLEAN FILL IS REGULATED FILL. REGULATED FILL IS WASTE AND MUST BE MANAGED IN ACCORDANCE WITH THE DEPARTMENT'S MUNICIPAL OR RESIDUAL WASTE REGULATIONS BASED ON 25 PA. CODE CHAPTERS 287 RESIDUAL WASTE MANAGEMENT OR 271 MUNICIPAL WASTE MANAGEMENT, WHICHEVER IS APPLICABLE. THESE REGULATIONS ARE AVAILABLE ON-LINE AT **WWW.PACODE.COM** .

OUTLET NO.	PIPE DIA Pd (IN)	RIPRAP SIZE R-_	RIPRAP THICK. Rt (IN)	APRON LENGTH Al (FT)	APRON INITIAL WIDTH Aiw (FT)	APRON TERMINAL WIDTH Atw (FT)
A3	30	4	18	16	7.5	23.5
A5	30	4	18	16	7.5	23.5
B1	15	5	27	8	3.75	11.75
B3	15	3	9	8	3.75	11.75

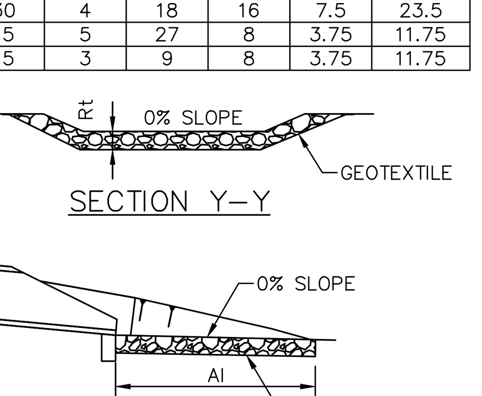

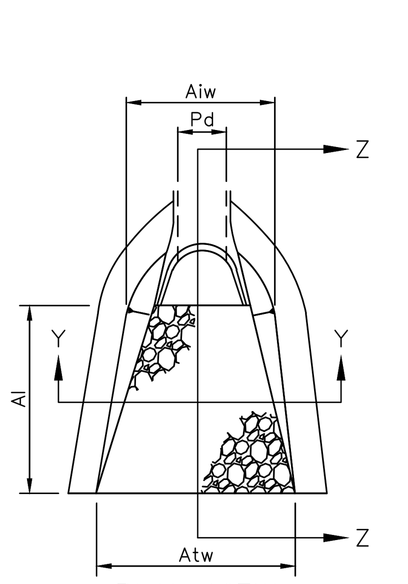

NOTES:

ALL APRONS SHALL BE CONSTRUCTED TO THE DIMENSIONS SHOWN. TERMINAL WIDTHS SHALL BE ADJUSTED AS NECESSARY TO MATCH RECEIVING CHANNELS.

ALL APRONS SHALL BE INSPECTED AT LEAST WEEKLY AND AFTER EACH RUNOFF EVENT. DISPLACED RIPRAP WITHIN THE APRON SHALL BE REPLACED IMMEDIATELY.

STANDARD CONSTRUCTION DETAIL #9-1
RIPRAP APRON AT PIPE OUTLET
WITH FLARED END SECTION OR ENDWALL
NOT TO SCALE

1720 WEST CHESTER PIKE
WILLISTOWN TOWNSHIP; CHESTER COUNTY, PA
STORMWATER TESTING CHART

Test I.D.	Test Pit Depth BGS*	Limiting Redox or Water Features*	Limiting Rock Features*	Infiltration Test Depth*	Mean Result (in/hr) (raw)**	Mean Result (in/hr) (Hvorslev)**
1	144	None	None	115	5.701	1.482
2	168	None	None	138	3.373	0.754
3	90	None	None	58	4.108	1.031
4	96	None	None	66	24.920	8.930
5	84	None	None	48	20.125	4.543
6	72	None	None	48	5.408	1.384
7	110	None	None	48	12.661	4.678
8	110	None	None	84	10.338	2.782
9	140	None	None	72	5.196	1.443
10	140	None	None	108	4.690	1.139
11	90	None	None	35	0.354	0.068
12	90	None	None	66	10.356	2.737
13	90	Water seeps @ 22	None	No Test		
14	90	Water seeps @ 22	None	No Test		
15	108	None	None	85	3.354	0.757
16	144	None	None	120	3.092	0.688
17	72	None	None	48	19.442	5.340

* Inches
** Average of two infiltration tests conducted at this location

BGS= below ground surface

NO.	REVISION	DATE	BY
2	REVISED PER TOWNSHIP REVIEW LETTER DATED 12/11/18	1/30/19	BG
1	REVISED PER TOWNSHIP REVIEW LETTERS DATED 9/13/18 & 10/26/18	11/5/18	BG

SEAL

NORTH

MANAGER NF
DESIGN KK | CHKD. BY
DRAFT BG | CHKD. BY
FILE ROU-01 | DATE 8/9/2018
NOTES | SCALE 1"=40'

BURSICH
Sharing your Vision

Corporate Headquarters
2129 East High Street
Pottstown, PA 19464
610-323-4040

Southampton Office
706 Lakeside Drive
Southampton, PA 18966

w w w . b u r s i c h . c o m

CLIENT
ROUSE/CHAMBERLIN, LTD
500 EXTON COMMONS
EXTON, PA 19341

SUBJECT
POST CONSTRUCTION STORMWATER MANAGEMENT NOTES

PRESERVE AT WILLISTOWN

WILLISTOWN TOWNSHIP, CHESTER COUNTY, PENNSYLVANIA

JOB NO. 187872
SHEET NO. 5 OF 5
DWG. NO. PC587872

P:\ROU-01\187872-00\dwg\LD_Plan\PC187872.dwg