Serial Number: 2016-118-3739

CALL BEFORE YOU DIG!

PENNSYLVANIA LAW REQUIRES 3 WORKING DAYS NOTICE FOR CONSTRUCTION PHASE AND 10 WORKING DAYS IN DESIGN STAGE–STOP CALL

Pennsylvania One Call System, Inc.
1–800–242–1776

ALL LOCATIONS OF EXISTING UTILITIES, SHOWN ON THIS PLAN, HAVE BEEN DEVELOPED FROM FIELD LOCATIONS OF VISIBLE ABOVE GROUND UTILITY STRUCTURES AND INFORMATION FURNISHED BY THE UTILITY COMPANIES.

ALL LOCATIONS SHOULD BE CONSIDERED APPROXIMATE. COMPLETENESS OR ACCURACY OF THE LOCATIONS AND DEPTH OF ALL STRUCTURES CANNOT BE GUARANTEED. CONTRACTORS MUST VERIFY ALL LOCATIONS AND DEPTHS OF ALL UNDERGROUND UTILITIES AND FACILITIES BEFORE THE START OF ANY WORK.

AS PER ACT 187 HOUSE BILL 2627, BEFORE THE START OF ANY EXCAVATION WORK THE CONTRACTOR SHALL NOTIFY THE AFFECTED UTILITY COMPANIES THROUGH THE PENNSYLVANIA "ONE CALL SYSTEM" 1–800–242–1776 THREE DAYS PRIOR TO THE START OF ANY EXCAVATION. THE CONTRACTOR SHALL VERIFY THE LOCATION AND DEPTH OF ALL UTILITIES PRIOR TO THE START OF ANY CONSTRUCTION.

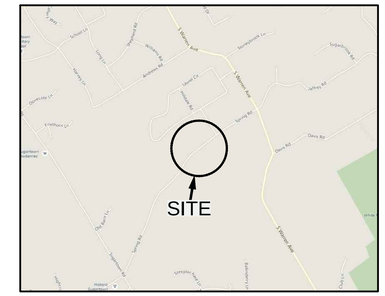

LOCATION MAP
SCALE: 1" = 2,000'

ZONING DATA (SF DETACHED)	RA	EXISTING
MINIMUM LOT AREA	2.0 AC	4.9 AC
MINIMUM LOT WIDTH	200 FT	403.0 FT
MINIMUM FRONT YARD	75 FT	378.4 FT
MINIMUM SIDE YARD EACH	40 FT	48.2 FT
MINIMUM SIDE YARD AGGREGATE	80 FT	288.0 FT
MINIMUM REAR YARD	40 FT	96.7 FT
MAXIMUM BUILDING HEIGHT	35 FT	1 STY
MAXIMUM BUILDING COVERAGE	12%	1.6%
MAXIMUM IMPERVIOUS COVERAGE	15%	4.7%

FOR MORE DETAILED INFORMATION REFER TO THE ZONING CODE OF WILLISTOWN TOWNSHIP, LATEST EDITION.

EXISTING LOT DATA:

RECORD OWNER:	MONKEY FARM, LLC P.O. BOX 1227 STUART, FL 34995
DEED BOOK & PAGE NO:	9360–1260
TAX PARCEL NUMBER:	54–03–149
BLOCK & UNIT NO:	03:149
GROSS LOT AREA:	212,118 SF (4.8696 AC)
NET LOT AREA:	205,469 SF (4.7169 AC)
ERROR OF CLOSURE:	1 : 100,000+

REFERENCE PLANS:

1. A TOPOGRAPHIC SURVEY PLAN PREPARED FOR MONKEY FARM, LLC BY JEFFREY P. TURNER, COLLEGEVILLE, PA. DATED OCTOBER 16, 2015. PLAN NO. C–54–03–149.
2. LIDAR TOPOGRAPHY AND OTHER GIS INFORMATION OBTAINED ELECTRONICALLY FROM SHAPE FILES DISTRIBUTED BY DELAWARE VALLEY REGIONAL PLANNING COMMISSION. FILES WERE OBTAINED VIA WWW.PASDA.PSU.EDU.
3. SOILS INFORMATION VIA THE NATURAL RESOURCES CONSERVATION SERVICE WEB SOIL SURVEY (WEBSOILSURVEY.SC.EGOV.USDA.GOV.)
4. DOUBLE RING INFILTROMETER TESTS AND TESTPIT SOIL EVALUATIONS PERFORMED BY DELAWARE VALLEY SEPTICS, INC. ON DECEMBER 19, 2016.

REFERENCE PLAN #1 NOTES:

1. OUTLINE DESCRIPTION AND LOCATION SHOWN IN ACCORDANCE WITH ACTUAL FIELD INSTRUMENT SURVEY CONDUCTED UPON THE GROUNDS BY JEFFREY P TURNER, PLS FROM VARIOUS DEEDS AND PLANS OF RECORD; SURVEY WAS PREFORMED WITHOUT THE BENEFIT OF A TITLE REPORT; PROPERTY MAY BE SUBJECT TO CERTAIN RIGHTS OF OTHERS.
2. CONTOURS PLOTTED FROM FIELD RUN SURVEY. GPS CONTROL WAS PERFORMED ONSITE TO ESTABLISH BENCHMARK. BENCHMARK DATUM NAD83.
3. THERE IS IDENTIFIABLE FLOOD PLAIN AREAS WITHIN THE PROJECT SITE AS ILLUSTRATED ON COMMUNITY PANEL NUMBER 42029C0160F OF THE FLOOD INSURANCE RATE MAP AS PREPARED BY THE FEDERAL EMERGENCY MANAGEMENT AGENCY FOR THE TOWNSHIP OF WESTTOWN, PENNSYLVANIA. EFFECTIVE DATE 09–30–2016
4. EXISTING SUBSURFACE UTILITY INFORMATION INDICATED IS BASED UPON VISUAL FIELD INSPECTION BY JEFFERY P. TURNER, PLS. SUCH INFORMATION CONCERNING THE SIZE, LOCATION, DEPTH, QUANTITY, ETC. OF SUBSURFACE UTILITIES IS APPROXIMATE IN NATURE AND HAS BEEN OBTAINED AS A SUPPLEMENT TO THE SITE SURVEY. THE INFORMATION PROVIDED IS REPRESENTATIVE OF SUBSURFACE CONDITIONS ONLY AT LOCATIONS AND DEPTHS WHERE SUCH INFORMATION WAS OBTAINED. THERE IS NO EXPRESSED OR IMPLIED AGREEMENT THAT UTILITY SIZE, LOCATION, DEPTH, QUANTITY, ETC. AS SHOWN EXISTS BETWEEN EXPLORED LOCATIONS. ACCORDINGLY, UTILITY INFORMATION SHOWN SHOULD NOT BE RELIED UPON FOR CONSTRUCTION PURPOSES. IT IS INCUMBENT UPON THE CONTRACTOR TO VERIFY THE SIZE, LOCATION, DEPTH, QUANTITY, ETC. OF ALL UTILITIES BEFORE EXCAVATION.

EXISTING IMPERVIOUS COVERAGE:

HOUSE & STABLE	3,337 SF (1.6%)
ASPHALT	5,041 SF
WALLS, WALKS, ETC.	1,182 SF
TOTAL	9,560 SF (4.7%)

WOODED LOT CALCULATIONS:

205,469 SF / 1,500 SF = 137 TREES TO BE A WOODED LOT
ASSUMED THE LOT IS WOODED
137 * 25% = 34 PERMITTED TO BE REMOVED
23 TREES PROPOSED TO BE REMOVED
0 REPLACEMENT TREES REQUIRED TO BE PLANTED

GENERAL NOTES:

1. NO WETLANDS WERE OBSERVED WITHIN THE FLOODPLAIN BOUNDARY WITHIN THE SURVEY LIMITS.
2. AREAS WITHIN 50' OF WETLANDS AND WITHIN 100' OF STREAM ARE ALL CONTAINED WITHIN THE 50' SETBACK FROM FLOODPLAIN BOUNDARY.

LINETYPE LEGEND

- EXISTING PROPERTY LINE
- EXISTING ROW LINE
- BUILDING SETBACK LINE
- EXISTING FENCE LINE
- OHW — OVERHEAD ELECTRIC
- E — ELECTRIC LINE
- G — GAS LINE
- T/C — TELECOMMUNICATION LINE
- W — WATER LINE
- SS — SANITARY PIPE
- ST — EXISTING STORM PIPES
- 379 — EXISTING 1' CONTOUR
- 380 — EXISTING 5' CONTOUR
- REGULATED PRECAUTIONARY SLOPE
- REGULATED PROHIBITIVE SLOPE
- NON–REGULATED PRECAUTIONARY SLOPE
- NON–REGULATED PROHIBITIVE SLOPE

SOILS INFORMATION					
SYMBOL	NAME	%SLOPE	HYDROLOGIC GROUP	DEPTH TO SH WATER	DEPTH TO BEDROCK
GdB	GLADSTONE GRAVELLY LOAM	3 TO 8 PERCENT SLOPES	B	6.6'+	5.0'–6.6'
GdC	GLADSTONE GRAVELLY LOAM	8 TO 15 PERCENT SLOPES	B	6.6'+	5.5'
Ha	HATBORO SILT LOAM	NOT RATED	B	0.0'–0.5'	5.0'–8.3'

NOTES: IF THE PROPOSED EROSION AND SEDIMENTATION CONTROL MEASURES ARE INSTALLED AND MAINTAINED PROPERLY, NO UNFORESEEN SOIL LIMITATIONS OR PROBLEMS ARE LIKELY. NEVERTHELESS, IF A PROBLEM DOES DEVELOP, THE DEVELOPER MUST TEMPORARILY SEED AND MULCH THE DISTURBED AREA. SUITABLE TOPSOIL SHALL BE IMPORTED TO SITE IF INADEQUATE QUANTITIES OF SUITABLE TOPSOIL EXIST ON SITE. ADEQUACY OF SOIL TO BE DETERMINED BY SITE GEOTECHNICAL ENGINEER IN CONJUNCTION WITH THE LANDSCAPE ARCHITECT. SOIL AMENDMENTS SHALL BE ADDED AS REQUIRED. ALL UNSUITABLE MATERIAL SHALL BE DISPOSED OF PROPERLY. SITE GEOTECHNICAL ENGINEER SHALL ALSO BE CONSULTED DURING WINTER GRADING OPERATIONS.

REV	DATE	COMMENTS
3	02/15/18	LAYOUT
2	06/15/17	PER TWP ENG
1	05/12/17	PER TWP ENG

ALL DOCUMENTS PREPARED OR FURNISHED BY ENGINEER ARE INSTRUMENTS OF SERVICE IN RESPECT OF THE PROJECT AND ARE PROPERTY INTEREST (INCLUDING THE COPYRIGHT AND THE RIGHT OF REUSE) IN SUCH DOCUMENTS, WHETHER OR NOT THE PROJECT IS COMPLETED. OWNER SHALL BE PERMITTED TO RETAIN COPIES OF DOCUMENTS ON THIS PROJECT, EVIDENCING OF THE PROJECT, AND FOR RELATED USES OF THE OWNER, SUBJECT TO RECEIPT BY ENGINEER OF PAYMENT EFFECTIVE ON ACCOUNT OF SERVICES. OWNER AND OTHERS TO WHOM DOCUMENTS ARE DISTRIBUTED TO THE FOLLOWING LIMITATIONS: OWNER ACKNOWLEDGES THAT SUCH DOCUMENTS ARE NOT INTENDED OR REPRESENTED TO BE SUITABLE FOR USE ON THE PROJECT UNLESS COMPLETED BY THE OWNER, AND THAT ANY USE OF THE DOCUMENTS ON EXTENSIONS OF THE PROJECT, ON ANY OTHER PROJECT, OR FOR ANY OTHER USE OR PURPOSE, WITHOUT WRITTEN VERIFICATION OR ADAPTATION BY ENGINEER; (2) ANY SUCH USE OR REUSE, OR ANY DEFECTS THEREIN, CAUSED BY ANY CHANGES OR ADAPTATIONS NOT COMPLETION, OR ADAPTATION BY ENGINEER, AS APPROPRIATE FOR THE SPECIFIC PURPOSE INTENDED, WILL BE AT OWNER'S SOLE RISK AND WITHOUT LIABILITY OR LEGAL EXPOSURE TO ENGINEER; (3) OWNER AGRICULTURE, OFFICERS, DIRECTORS, MEMBERS, PARTNERS, AGENTS, EMPLOYEES, AND CONSULTANTS; (3) OWNER SHALL INDEMNIFY AND HOLD HARMLESS ENGINEER AND ENGINEER'S OFFICERS, DIRECTORS, MEMBERS, PARTNERS, AGENTS, EMPLOYEES, AND CONSULTANTS FROM ALL CLAIMS, DAMAGES, LOSSES, AND EXPENSES, INCLUDING ATTORNEYS' FEES, ARISING OUT OF OR PERTAINING TO ANY USE OF DOCUMENTS, OR ANY DEFECTS IN DOCUMENTS WITHOUT WRITTEN VERIFICATION, COMPLETION, OR ADAPTATION BY ENGINEER; AND (4) SUCH LIMITED LICENSE TO OWNER SHALL NOT CREATE ANY RIGHTS IN THIRD PARTIES.

SEAL: COMMONWEALTH OF PENNSYLVANIA — REGISTERED PROFESSIONAL ENGINEER — CHRISTOPHER C. YOHN — PE073703

PROJECT:	SINGLE FAMILY RESIDENTIAL BUILDING ADDITION
PROJECT ADDRESS:	218 SPRING ROAD, MALVERN, PA 19355
MUNICIPALITY:	WILLISTOWN TOWNSHIP
COUNTY:	CHESTER COUNTY
PLAN SET:	SOIL AND EROSION AND STORMWATER PERMIT PLANS
SHEET NAME:	EXISTING CONDITIONS

PREPARED FOR:
OWNER / APPLICANT
MONKEY FARM, LLC
P.O. BOX 1227
STUART, FL 34995

DATE:	APRIL 11, 2017
SCALE:	1" = 20'
ONE CALL NUMBER:	2016–118–3739
DRAWN BY:	CCY
PROJECT NUMBER:	16–037

PREPARED BY:
YOHN ENGINEERING, LLC
555 SECOND AVENUE, SUITE B–205
COLLEGEVILLE, PA 19426
610–489–4580
WWW.YOHNENGINEERING.COM

YOHN Engineering, LLC

SHEET: 1 OF 6

Serial Number: 2016-118-3739

CALL BEFORE YOU DIG!

PENNSYLVANIA LAW REQUIRES 3 WORKING DAYS NOTICE FOR CONSTRUCTION PHASE AND 10 WORKING DAYS IN DESIGN STAGE-STOP CALL
Pennsylvania One Call System, Inc.
1-800-242-1776

ALL LOCATIONS OF EXISTING UTILITIES, SHOWN ON THIS PLAN, HAVE BEEN DEVELOPED FROM FIELD LOCATIONS OF VISIBLE ABOVE GROUND UTILITY STRUCTURES AND INFORMATION FURNISHED BY THE UTILITY COMPANIES.

ALL LOCATIONS SHOULD BE CONSIDERED APPROXIMATE. COMPLETENESS OR ACCURACY OF THE LOCATIONS AND DEPTH OF ALL STRUCTURES CANNOT BE GUARANTEED. CONTRACTORS MUST VERIFY ALL LOCATIONS AND DEPTHS OF ALL UNDERGROUND UTILITIES AND FACILITIES BEFORE THE START OF ANY WORK.

AS PER ACT 187 HOUSE BILL 2627, BEFORE THE START OF ANY EXCAVATION WORK THE CONTRACTOR SHALL NOTIFY THE AFFECTED UTILITY COMPANIES THROUGH THE PENNSYLVANIA "ONE CALL SYSTEM" 1-800-242-1776 THREE DAYS PRIOR TO THE START OF ANY EXCAVATION. THE CONTRACTOR SHALL VERIFY THE LOCATION AND DEPTH OF ALL UTILITIES PRIOR TO THE START OF ANY CONSTRUCTION.

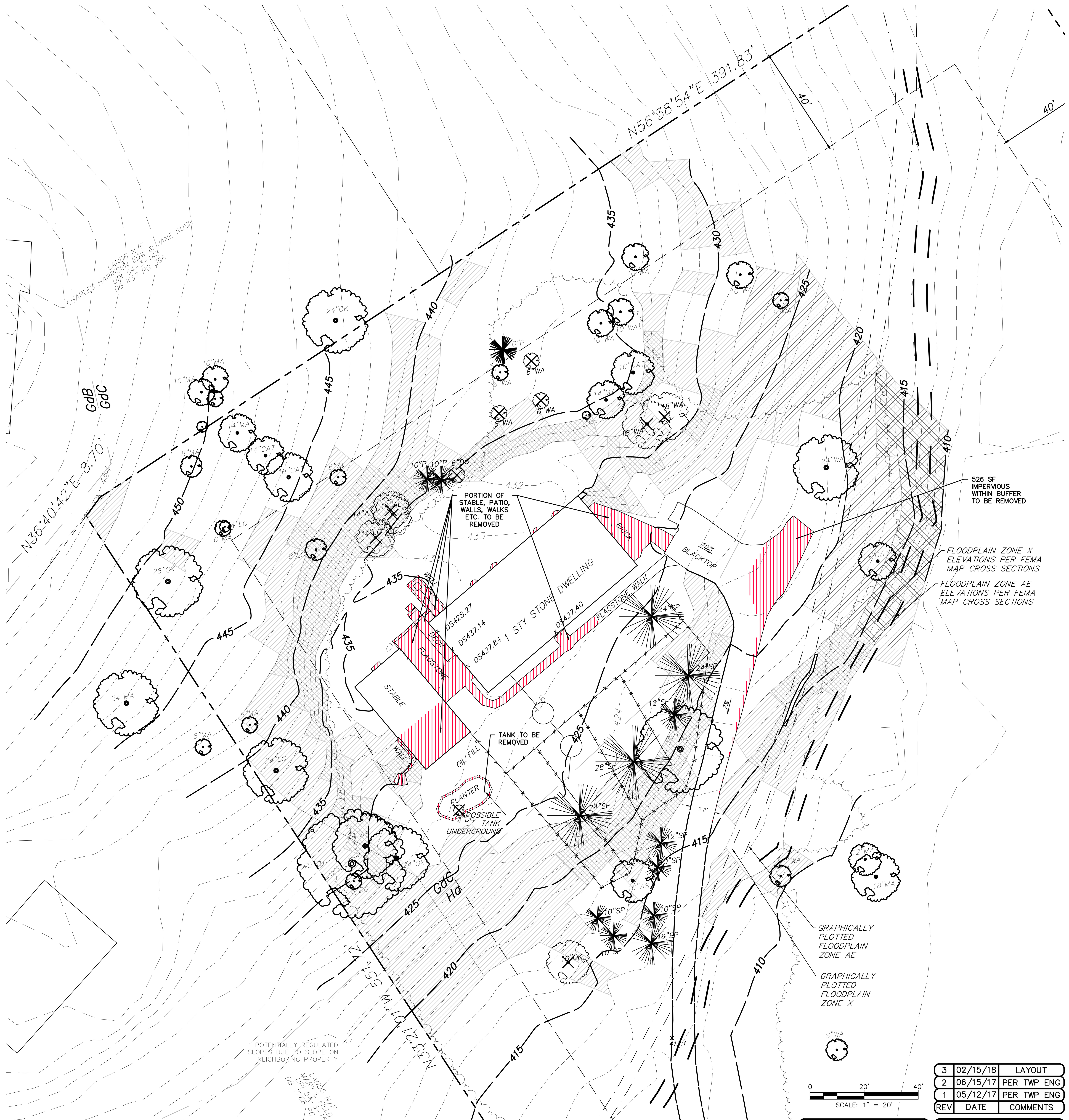

LINETYPE LEGEND

- EXISTING PROPERTY LINE
- EXISTING ROW LINE
- BUILDING SETBACK LINE
- EXISTING FENCE LINE
- OHW — OVERHEAD ELECTRIC
- E — ELECTRIC LINE
- G — GAS LINE
- T/C — TELECOMMUNICATION LINE
- W — WATER LINE
- SS — SANITARY PIPE
- ST — EXISTING STORM PIPES
- 379 — EXISTING 1' CONTOUR
- 380 — EXISTING 5' CONTOUR
- REGULATED PRECAUTIONARY SLOPE
- REGULATED PROHIBITIVE SLOPE
- NON-REGULATED PRECAUTIONARY SLOPE
- NON-REGULATED PROHIBITIVE SLOPE
- IMPERVIOUS TO BE REMOVED

SOILS INFORMATION

SYMBOL	NAME	%SLOPE	HYDROLOGIC GROUP	DEPTH TO SH WATER	DEPTH TO BEDROCK
GdB	GLADSTONE GRAVELLY LOAM	3 TO 8 PERCENT SLOPES	B	6.6'+	5.0'-6.6'
GdC	GLADSTONE GRAVELLY LOAM	8 TO 15 PERCENT SLOPES	B	6.6'+	5.5'
Ha	HATBORO SILT LOAM	NOT RATED	B	0.0'-0.5'	5.0'-8.3'

NOTES: IF THE PROPOSED EROSION AND SEDIMENTATION CONTROL MEASURES ARE INSTALLED AND MAINTAINED PROPERLY, NO UNFORESEEN SOIL LIMITATIONS OR PROBLEMS ARE LIKELY. NEVERTHELESS, IF A PROBLEM DOES DEVELOP, THE DEVELOPER MUST TEMPORARILY SEED AND MULCH THE DISTURBED AREA. SUITABLE TOPSOIL SHALL BE IMPORTED TO SITE IF INADEQUATE QUANTITIES OF SUITABLE TOPSOIL EXIST ON SITE. ADEQUACY OF SOIL TO BE DETERMINED BY SITE GEOTECHNICAL ENGINEER IN CONJUNCTION WITH THE LANDSCAPE ARCHITECT. SOIL AMENDMENTS SHALL BE ADDED AS REQUIRED. ALL UNSUITABLE MATERIAL SHALL BE DISPOSED OF PROPERLY. SITE GEOTECHNICAL ENGINEER SHALL ALSO BE CONSULTED DURING WINTER GRADING OPERATIONS.

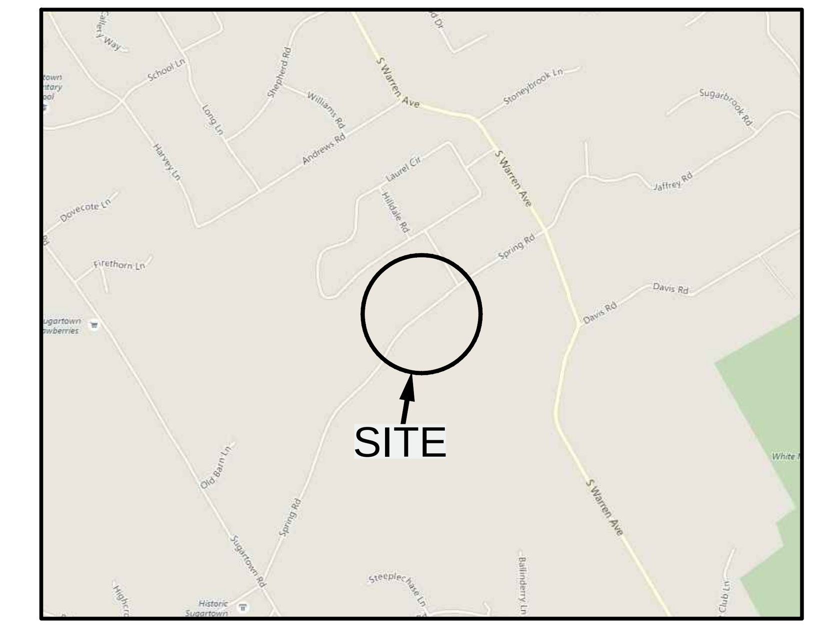

LOCATION MAP
SCALE: 1" = 2,000'

ZONING DATA (SF DETACHED)	RA	EXISTING	PROPOSED
MINIMUM LOT AREA	2.0 AC	4.9 AC	4.9 AC
MINIMUM LOT WIDTH	200 FT	403.0 FT	403.0 FT
MINIMUM FRONT YARD	75 FT	378.4 FT	358.5 FT
MINIMUM SIDE YARD EACH	40 FT	48.2 FT	48.2 FT
MINIMUM SIDE YARD AGGREGATE	80 FT	288.0 FT	211.6 FT
MINIMUM REAR YARD	40 FT	96.7 FT	96.7 FT
MAXIMUM BUILDING HEIGHT	35 FT	1 STY	2 STY
MAXIMUM BUILDING COVERAGE	12%	1.6%	1.7%
MAXIMUM IMPERVIOUS COVERAGE	15%	4.7%	6.3%

FOR MORE DETAILED INFORMATION REFER TO THE ZONING CODE OF WILLISTOWN TOWNSHIP, LATEST EDITION.

EXISTING LOT DATA:

RECORD OWNER:	MONKEY FARM, LLC P.O. BOX 1227 STUART, FL 34995
DEED BOOK & PAGE NO:	9360-1260
TAX PARCEL NUMBER:	54-03-149
BLOCK & UNIT NO:	03:149
GROSS LOT AREA:	212,118 SF (4.8696 AC)
NET LOT AREA:	205,469 SF (4.7169 AC)
ERROR OF CLOSURE:	1 : 100,000+

REFERENCE PLANS:
1. A TOPOGRAPHIC SURVEY PLAN PREPARED FOR MONKEY FARM, LLC BY JEFFREY P. TURNER, COLLEGEVILLE, PA. DATED OCTOBER 16, 2015. PLAN NO. C-54-03-149.
2. LIDAR TOPOGRAPHY AND OTHER GIS INFORMATION OBTAINED ELECTRONICALLY FROM SHAPE FILES DISTRIBUTED BY DELAWARE VALLEY REGIONAL PLANNING COMMISSION. FILES WERE OBTAINED VIA WWW.PASDA.PSU.EDU.
3. SOILS INFORMATION VIA THE NATURAL RESOURCES CONSERVATION SERVICE WEB SOIL SURVEY (WEBSOILSURVEY.SC.EGOV.USDA.GOV.)
4. DOUBLE RING INFILTROMETER TESTS AND TESTPIT SOIL EVALUATIONS PERFORMED BY DELAWARE VALLEY SEPTICS, INC. ON DECEMBER 19, 2016.

REFERENCE PLAN #1 NOTES:
1. OUTLINE DESCRIPTION AND LOCATION SHOWN IN ACCORDANCE WITH ACTUAL FIELD INSTRUMENT SURVEY CONDUCTED UPON THE GROUNDS BY JEFFREY P TURNER, PLS FROM VARIOUS DEEDS AND PLANS OF RECORD; SURVEY WAS PREFORMED WITHOUT THE BENEFIT OF A TITLE REPORT; PROPERTY MAY BE SUBJECT TO CERTAIN RIGHTS OF OTHERS.
2. CONTOURS PLOTTED FROM FIELD RUN SURVEY. GPS CONTROL WAS PERFORMED ONSITE TO ESTABLISH BENCHMARK. BENCHMARK DATUM NAD83.
3. THERE IS IDENTIFIABLE FLOOD PLAIN AREAS WITHIN THE PROJECT SITE AS ILLUSTRATED ON COMMUNITY PANEL NUMBER 42029C0160F OF THE FLOOD INSURANCE RATE MAP AS PREPARED BY THE FEDERAL EMERGENCY MANAGEMENT AGENCY FOR THE TOWNSHIP OF WESTTOWN, PENNSYLVANIA. EFFECTIVE DATE 09-30-2016
4. EXISTING SUBSURFACE UTILITY INFORMATION INDICATED IS BASED UPON VISUAL FIELD INSPECTION BY JEFFERY P. TURNER, PLS. SUCH INFORMATION CONCERNING THE SIZE, LOCATION, DEPTH, QUANTITY, ETC. OF SUBSURFACE UTILITIES IS APPROXIMATE IN NATURE AND HAS BEEN OBTAINED AS A SUPPLEMENT TO THE SITE SURVEY. THE INFORMATION PROVIDED IS REPRESENTATIVE OF SUBSURFACE CONDITIONS ONLY AT LOCATIONS AND DEPTHS WHERE SUCH INFORMATION WAS OBTAINED. THERE IS NO EXPRESSED OR IMPLIED AGREEMENT THAT UTILITY SIZE, LOCATION, DEPTH, QUANTITY, ETC. AS SHOWN EXISTS BETWEEN EXPLORED LOCATIONS. ACCORDINGLY, UTILITY INFORMATION SHOWN SHOULD NOT BE RELIED UPON FOR CONSTRUCTION PURPOSES. IT IS INCUMBENT UPON THE CONTRACTOR TO VERIFY THE SIZE, LOCATION, DEPTH, QUANTITY, ETC. OF ALL UTILITIES BEFORE EXCAVATION.

EXISTING IMPERVIOUS COVERAGE:

HOUSE & STABLE	3,337 SF (1.6%)
ASPHALT	5,041 SF
WALLS, WALKS, ETC.	1,182 SF
TOTAL	9,560 SF (4.7%)

WOODED LOT CALCULATIONS:
205,469 SF / 1,500 SF = 137 TREES TO BE A WOODED LOT
ASSUMED THE LOT IS WOODED
137 * 25% = 34 PERMITTED TO BE REMOVED
16 TREE PROPOSED TO BE REMOVED
0 REPLACEMENT TREES REQUIRED TO BE PLANTED

GENERAL NOTES:
1. NO WETLANDS WERE OBSERVED WITHIN THE FLOODPLAIN BOUNDARY WITHIN THE SURVEY LIMITS.
2. AREAS WITHIN 50' OF WETLANDS AND WITHIN 100' OF STREAM ARE ALL CONTAINED WITHIN THE 50' SETBACK FROM FLOODPLAIN BOUNDARY.

0 20' 40'
SCALE: 1" = 20'

REV	DATE	COMMENTS
3	02/15/18	LAYOUT
2	06/15/17	PER TWP ENG
1	05/12/17	PER TWP ENG

ALL DOCUMENTS PREPARED OR FURNISHED BY ENGINEER ARE INSTRUMENTS OF SERVICE, AND ENGINEER RETAINS AN OWNERSHIP AND PROPERTY INTEREST (INCLUDING THE COPYRIGHT AND THE RIGHT OF REUSE) IN SUCH DOCUMENTS, WHETHER OR NOT THE PROJECT IS COMPLETED. OWNER SHALL HAVE A LIMITED LICENSE TO USE THE DOCUMENTS ON THE PROJECT, EXTENSIONS OF THE PROJECT, AND FOR RELATED USES OF THE OWNER, SUBJECT TO RECEIPT BY ENGINEER OF FULL PAYMENT FOR ALL SERVICES RELATING TO PREPARATION OF THE DOCUMENTS AND SUBJECT TO THE FOLLOWING LIMITATIONS: (1) OWNER ACKNOWLEDGES THAT SUCH DOCUMENTS ARE NOT INTENDED OR REPRESENTED TO BE SUITABLE FOR USE ON THE PROJECT UNLESS COMPLETED BY ENGINEER, OR FOR USE OR REUSE BY OWNER OR OTHERS ON EXTENSIONS OF THE PROJECT, ON ANY OTHER PROJECT, OR FOR ANY OTHER USE OR PURPOSE, WITHOUT WRITTEN VERIFICATION OR ADAPTATION BY ENGINEER; (2) ANY SUCH USE OR REUSE, OR ANY MODIFICATION OF THE DOCUMENTS, WITHOUT WRITTEN VERIFICATION, COMPLETION, OR ADAPTATION BY ENGINEER, AS APPROPRIATE FOR THE SPECIFIC PURPOSE INTENDED, WILL BE AT OWNER'S SOLE RISK AND WITHOUT LIABILITY OR LEGAL EXPOSURE TO ENGINEER OR TO ITS OFFICERS, DIRECTORS, MEMBERS, PARTNERS, AGENTS, EMPLOYEES, AND CONSULTANTS; (3) OWNER SHALL INDEMNIFY AND HOLD HARMLESS ENGINEER AND ITS OFFICERS, DIRECTORS, MEMBERS, PARTNERS, AGENTS, EMPLOYEES, AND CONSULTANTS FROM ALL CLAIMS, DAMAGES, LOSSES, AND EXPENSES, INCLUDING ATTORNEYS' FEES, ARISING OUT OF OR RESULTING FROM ANY USE, REUSE, OR MODIFICATION OF THE DOCUMENTS WITHOUT WRITTEN VERIFICATION, COMPLETION, OR ADAPTATION BY ENGINEER; AND (4) SUCH LIMITED LICENSE TO OWNER SHALL NOT CREATE ANY RIGHTS IN THIRD PARTIES.

SEAL: COMMONWEALTH OF PENNSYLVANIA — REGISTERED PROFESSIONAL — CHRISTOPHER C. YOHN — ENGINEER — PE073703

PROJECT: SINGLE FAMILY RESIDENTIAL BUILDING ADDITION
PROJECT ADDRESS: 218 SPRING ROAD, MALVERN, PA 19355
MUNICIPALITY: WILLISTOWN TOWNSHIP — COUNTY: CHESTER COUNTY
PLAN SET: SOIL AND EROSION AND STORMWATER PERMIT PLANS
SHEET NAME: DEMOLITION PLAN

PREPARED FOR:
OWNER / APPLICANT
MONKEY FARM, LLC
P.O. BOX 1227
STUART, FL 34995

DATE:	APRIL 11, 2017
SCALE:	1" = 20'
ONE CALL NUMBER:	2016-118-3739
DRAWN BY:	CCY
PROJECT NUMBER:	16-037

PREPARED BY:
YOHN ENGINEERING, LLC
555 SECOND AVENUE, SUITE B-205
COLLEGEVILLE, PA 19426
610-489-4580
WWW.YOHNENGINEERING.COM

YOHN Engineering, LLC

Serial Number: 2016-118-3739

CALL BEFORE YOU DIG!

PENNSYLVANIA LAW REQUIRES 3 WORKING DAYS NOTICE FOR CONSTRUCTION PHASE AND 10 WORKING DAYS IN DESIGN STAGE–STOP CALL

Pennsylvania One Call System, Inc.
1–800–242–1776

ALL LOCATIONS OF EXISTING UTILITIES, SHOWN ON THIS PLAN, HAVE BEEN DEVELOPED FROM FIELD LOCATIONS OF VISIBLE ABOVE GROUND UTILITY STRUCTURES AND INFORMATION FURNISHED BY THE UTILITY COMPANIES.

ALL LOCATIONS SHOULD BE CONSIDERED APPROXIMATE. COMPLETENESS OR ACCURACY OF THE LOCATIONS AND DEPTH OF ALL STRUCTURES CANNOT BE GUARANTEED. CONTRACTORS MUST VERIFY ALL LOCATIONS AND DEPTHS OF ALL UNDERGROUND UTILITIES AND FACILITIES BEFORE THE START OF ANY WORK.

AS PER ACT 187 HOUSE BILL 2627, BEFORE THE START OF ANY EXCAVATION WORK THE CONTRACTOR SHALL NOTIFY THE AFFECTED UTILITY COMPANIES THROUGH THE PENNSYLVANIA "ONE CALL SYSTEM" 1–800–242–1776 THREE DAYS PRIOR TO THE START OF ANY EXCAVATION. THE CONTRACTOR SHALL VERIFY THE LOCATION AND DEPTH OF ALL UTILITIES PRIOR TO THE START OF ANY CONSTRUCTION.

N

RETAINING WALL NOTES

A QUALIFIED DESIGNEE OR ENGINEER OF RECORD MUST APPROVE THE WORK STATING THAT THE WALLS WERE CONSTRUCTED IN ACCORDANCE WITH THE APPROVED PLANS AND SPECIFICATIONS. THE TOWNSHIP REQUIRES A PROFESSIONAL REPORT, SIGNED AND SEALED, BEFORE TOWNSHIP APPROVAL OF THE PROJECT IS GRANTED. APPROVAL BY THE ENGINEER OF RECORD WILL ONLY BE GRANTED IN ACCORDANCE WITH THE NOTES STATED BELOW, REQUIRING CONCRETE TESTING AND SHOP DRAWING SUBMITTALS.

FOUNDATION AND EARTHWORK

1. THE FOLLOWING CODES AND STANDARDS, INCLUDING ALL SPECIFICATIONS REFERENCED WITHIN, SHALL APPLY TO THE DESIGN, CONSTRUCTION, AND SAFETY OF ALL WORK PERFORMED ON THE PROJECT. "INTERNATIONAL BUILDING CODE – 2009 EDITION", INTERNATIONAL CODE COUNCIL. ALL LOCAL, COUNTY, AND STATE MODIFICATIONS AND REVISIONS TO THE BUILDING CODES.
2. NO SUBSURFACE INVESTIGATION REPORT HAS BEEN PROVIDED FOR THIS PROJECT. FOUNDATIONS HAVE BEEN DESIGNED IN ACCORDANCE WITH 2009 IBC, SECTIONS 1610 AND 1806 CRITERIA, OR UNIFIED SOIL CLASSIFICATION SYSTEM.
3. FOOTINGS SHALL BEAR ON UNDISTURBED STRATUM OR ENGINEERED FILL WITH A MINIMUM BEARING CAPACITY OF 2,000 PSF.
4. RETAINING WALLS HAVE BEEN DESIGN FOR AN ASSUMED AT REST PRESSURE OF 45 PCF.
5. THE GENERAL CONTRACTOR SHALL RETAIN A GEOTECHNICAL ENGINEER TO VERIFY AND DOCUMENT THAT THE SOIL CONDITIONS AND FOOTING SUBGRADE MEET THE SOIL PARAMETERS UTILIZED IN THE DESIGN.
6. DO NOT BACKFILL AGAINST RETAINING WALLS UNTIL CONCRETE HAS ATTAINED 75% OF THE SPECIFIED 28–DAY DESIGN STRENGTH. BACKFILL SHALL BE BROUGHT UP EQUALLY ON EACH SIDE OF THE WALLS.
7. THE BOTTOM OF EXTERIOR FOOTINGS SHALL BE A MINIMUM OF THREE (3) FEET BELOW FINISHED GRADE.
8. ALL FOUNDATIONS SHALL BE PROTECTED FROM FROST ACTION.
9. ENGINEERED (CONTROLLED COMPACTED) FILL WITHIN THE BUILDING AREA SHALL BE CONSTRUCTED PRIOR TO FOOTING EXCAVATION.
10. SATISFACTORY FILL MATERIALS ARE THOSE COMPLYING WITH ASTM D2487, GROUPS GW, GP, GM, SM, SW, AND SP. ON SITE BORROW MATERIAL SHALL BE TESTED TO DETERMINE SUITABILITY FOR USE AS FILL MATERIAL.
11. DRAINAGE FILL UNDER SLABS, FOOTINGS, AND KEYS SHALL BE 4" CLEAN #57 STONE.
12. COLD WEATHER PROTECTION: PROTECT EXCAVATION BOTTOMS AGAINST FREEZING WHEN ATMOSPHERIC TEMPERATURE IS LESS THAN 35 DEGREES F. COMPLY WITH THE REQUIREMENTS OF ACI 306R LATEST EDITION AND IN PARTICULAR, CHAPTER 4, PREPARATION BEFORE PLACING CONCRETE
13. COMPACT SOIL TO NOT LESS THAN THE FOLLOWING PERCENTAGES OF MAXIMUM DENSITY OF MODIFIED PROCTOR (ASTM D1557):
    UNDER FOUNDATIONS – 98%
    UNDER SLABS, STEPS, PAVEMENTS – 95%

CONCRETE

1. REINFORCED CONCRETE WORK SHALL BE IN ACCORDANCE WITH THE "BUILDING CODE REQUIREMENTS FOR REINFORCED CONCRETE" (ACI 318, LATEST EDITION) AND THE SPECIFICATIONS FOR STRUCTURAL CONCRETE (ACI 301, LATEST EDITION) OF THE AMERICAN CONCRETE INSTITUTE.
2. ALL CONCRETE SHALL BE NORMAL WEIGHT AND HAVE A MINIMUM COMPRESSIVE 28–DAY STRENGTH OF 3,000 PSI, SLUMP 3" +/– ½". AIR ENTRAINMENT OF 6%+/– 1½% IN ALL EXPOSED CONCRETE WORK. CEMENT SHALL BE PORTLAND CEMENT CONFORMING TO ASTM C150. FLY ASH, SLAG, OR OTHER POZZOLANS SHALL NOT CONSTITUTE MORE THAN 25% OF THE TOTAL CEMENTIOUS WEIGHT. WATER SHALL CONFORM TO ASTM C1602 AND THE MAXIMUM WATER TO CEMENT RATIO SHALL BE 0.45.
3. ADMIXTURES CONTAINING CALCIUM CHLORIDE SHALL NOT BE USED IN THE CONCRETE DESIGN MIX. ADMIXTURES SHALL BE USED AND MIXED IN ACCORDANCE WITH MANUFACTURER'S RECOMMENDATIONS. HIGH RANGE WATER REDUCERS SHALL NOT BE USED IN CONCRETE SLAB–ON–GRADE.
4. REINFORCING STEEL: ASTM A–615, GRADE 60.
5. REINFORCING STEEL CLEAR COVER SHALL BE AS FOLLOWS UNLESS NOTED OTHERWISE:
    CONCRETE CAST AGAINST AND PERMANENTLY EXPOSED TO EARTH 3"
    CONCRETE EXPOSED TO EARTH OR WEATHER
    #6 BARS AND LARGER 2"
    #5 BARS AND SMALLER 1–1/2"
    CONCRETE NOT EXPOSED TO WEATHER OR IN CONTACT WITH GROUND
    #11 BARS AND SMALLER 3/4"
6. REINFORCING BAR SPLICES SHALL BE CLASS 'B' TENSION LAP PER ACI 318 U.N.O.
7. COLD WEATHER CONCRETING SHALL BE IN ACCORDANCE WITH ACI–306.
8. HOT WEATHER CONCRETING SHALL BE IN ACCORDANCE WITH ACI–305.
9. BONDING AGENT SHALL BE USED WHERE NEW CONCRETE IS PLACED AGAINST EXISTING CONCRETE.
10. CONTRACTOR SHALL RETAIN TESTING AGENCY TO PROVIDE THE FOLLOWING TESTING SERVICES:
    SAMPLES OF FRESH CONCRETE PER ASTM C172.
    SLUMP PER ASTM C143
    AIR CONTENT PER ASTM C231 OR C173,
    TEMPERATURE PER ASTM C1064

CONCRETE (CONTINUED)

UNIT WEIGHT FOR LIGHTWEIGHT CONCRETE PER ASTM C567
CYLINDER TESTS PER ASTM C31 AND C39. PREPARE ONE SET OF SIX (6) CYLINDERS FOR EACH 50 CUBIC YARDS OR EACH DAY'S POUR FOR EACH MIX USED. TEST TWO CYLINDERS FOR COMPRESSIVE STRENGTH AT SEVEN DAYS AND THREE AT 28 DAYS IN ACCORDANCE WITH ASTM C39.

CONTRACTOR SHALL SUBMIT TEST RESULTS WITHIN 48 HOURS OF TESTING

11. EPOXY ADHESIVE SHALL BE USED WHERE DOWELS ARE TO BE INSTALLED INTO EXISTING CONCRETE. WHEN INSTALLING EXPANSION BOLTS OR ADHESIVE ANCHORS, THE CONTRACTOR SHALL TAKE MEASURES TO AVOID DRILLING OR CUTTING OF ANY EXISTING REINFORCING AND DESTRUCTION OF CONCRETE. HOLES SHALL BE BLOWN CLEAN PRIOR TO PLACING BOLTS OR ADHESIVE ANCHORS. FOLLOW ALL MANUFACTURER GUIDELINES AND RECOMMENDATIONS WHILE INSTALLING ADHESIVE OR EXPANSION ANCHORS.
12. NO SLEEVE SHALL BE PLACED THROUGH ANY CONCRETE ELEMENT UNLESS SHOWN ON THE APPROVED SHOP DRAWINGS OR SPECIFICALLY AUTHORIZED IN WRITING BY THE STRUCTURAL ENGINEER. ALL INSERTS AND SLEEVES SHALL BE CAST–IN–PLACE WHENEVER FEASIBLE. STEP FOUNDATIONS AS REQUIRED FOR ALL UTILITIES AND/OR CONDUITS IN ACCORDANCE WITH DETAIL PROVIDED ON THE STRUCTURAL DRAWINGS.
13. SHOP DRAWINGS FOR REINFORCING STEEL SHALL BE SUBMITTED TO THE ENGINEER FOR REVIEW PRIOR TO THE COMMENCEMENT OF WORK.
    a. NO PORTION OF THE STRUCTURAL DRAWINGS MAY BE REPRODUCED FOR SUBMITTAL AS SHOP DRAWINGS.
    b. SHOP DRAWINGS SHALL BEAR THE GENERAL CONTRACTOR'S STAMP OF APPROVAL, WHICH SHALL CONSTITUTE CERTIFICATION THAT HE HAS VERIFIED ALL FIELD MEASUREMENTS, CONSTRUCTION CRITERIA, MATERIALS AND SIMILAR DATA AND HAS CHECKED EACH DRAWING FOR COMPLETENESS, COORDINATION, AND COMPLIANCE WITH THE CONTRACT DOCUMENTS. SHOP DRAWINGS NOT REVIEWED BY THE GENERAL CONTRACTOR PRIOR TO SUBMITTAL WILL BE REJECTED.
    c. CHANGES TO SHOP DRAWINGS THAT ARE RE–SUBMITTED MUST BE CLOUDED OR OTHERWISE CLEARLY INDICATE THE CHANGES THAT HAVE BEEN MADE TO A PREVIOUSLY ISSUED AND REVIEWED DRAWING.

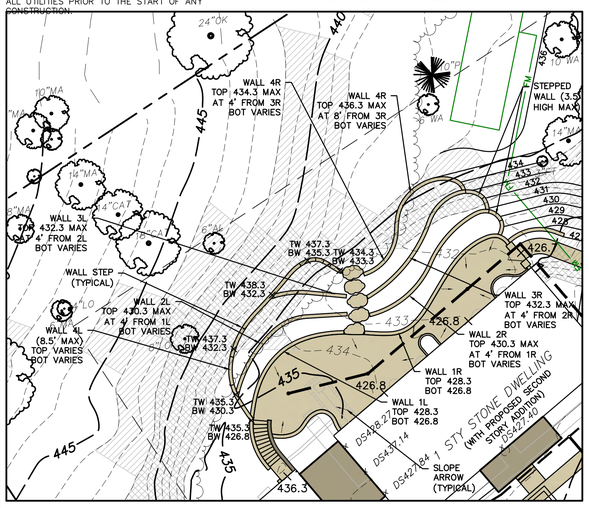

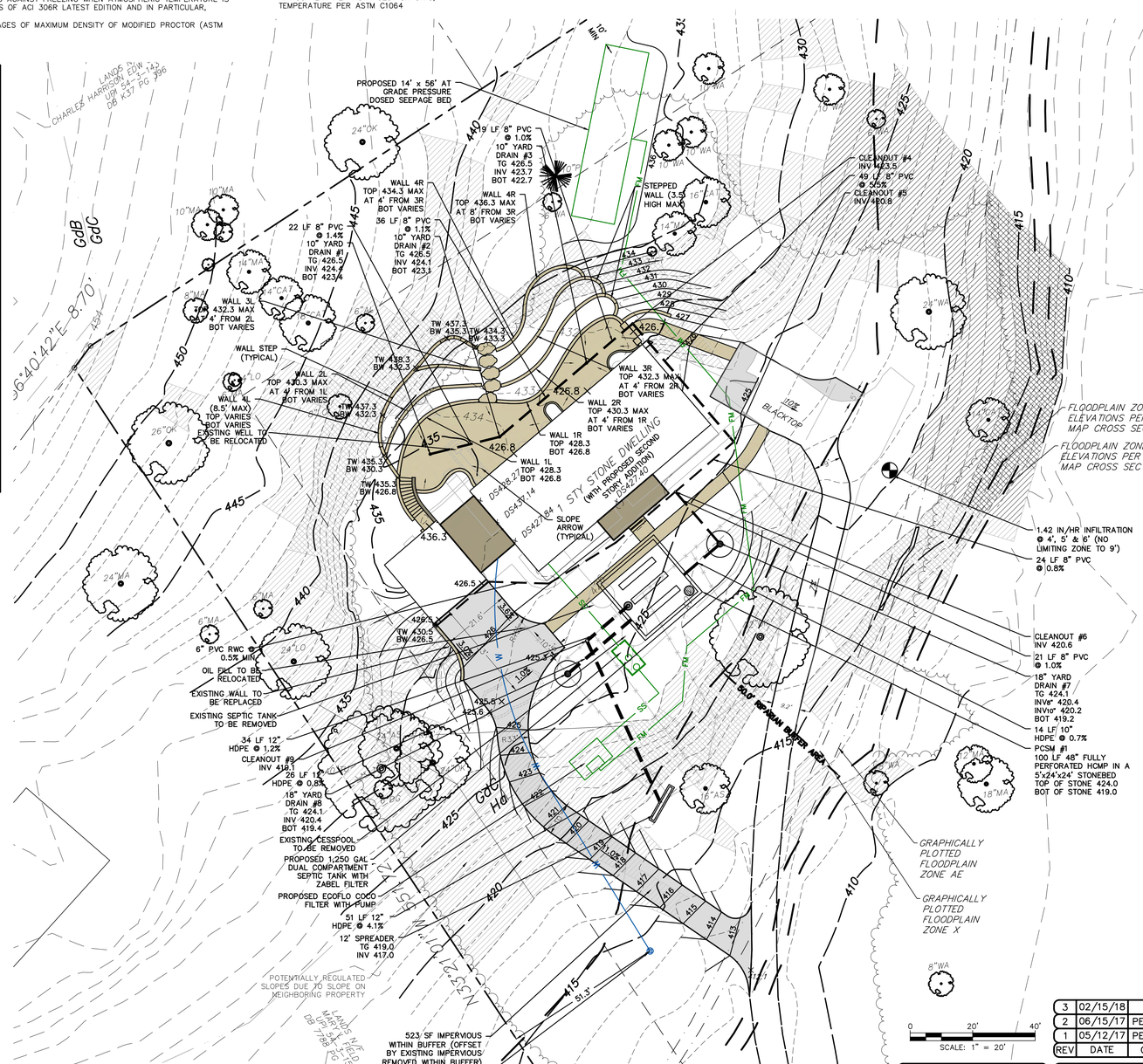

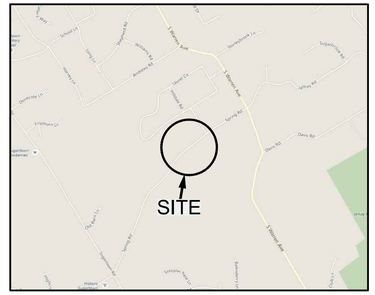

LOCATION MAP
SCALE: 1" = 2,000'

ZONING DATA (SF DETACHED)	RA	EXISTING	PROPOSED
MINIMUM LOT AREA	2.0 AC	4.9 AC	4.9 AC
MINIMUM LOT WIDTH	200 FT	403.0 FT	403.0 FT
MINIMUM FRONT YARD	75 FT	378.4 FT	358.5 FT
MINIMUM SIDE YARD EACH	40 FT	48.2 FT	48.2 FT
MINIMUM SIDE YARD AGGREGATE	80 FT	288.0 FT	211.6 FT
MINIMUM REAR YARD	40 FT	96.7 FT	96.7 FT
MAXIMUM BUILDING HEIGHT	35 FT	1 STY	2 STY
MAXIMUM BUILDING COVERAGE	12%	1.6%	1.7%
MAXIMUM IMPERVIOUS COVERAGE	15%	4.7%	6.3%

FOR MORE DETAILED INFORMATION REFER TO THE ZONING CODE OF WILLISTOWN TOWNSHIP, LATEST EDITION.

EXISTING LOT DATA:

RECORD OWNER:	MONKEY FARM, LLC P.O. BOX 1227 STUART, FL 34995
DEED BOOK & PAGE NO:	9360–1260
TAX PARCEL NUMBER:	54–03–149
BLOCK & UNIT NO:	03:149
GROSS LOT AREA:	212,118 SF (4.8696 AC)
NET LOT AREA:	205,469 SF (4.7169 AC)
ERROR OF CLOSURE:	1 : 100,000+

REFERENCE PLANS:

1. A TOPOGRAPHIC SURVEY PLAN PREPARED FOR MONKEY FARM, LLC BY JEFFREY P. TURNER, COLLEGEVILLE, PA. DATED OCTOBER 16, 2015. PLAN NO. C–54–03–149.
2. LIDAR TOPOGRAPHY AND OTHER GIS INFORMATION OBTAINED ELECTRONICALLY FROM SHAPE FILES DISTRIBUTED BY DELAWARE VALLEY REGIONAL PLANNING COMMISSION. FILES WERE OBTAINED VIA WWW.PASDA.PSU.EDU.
3. SOILS INFORMATION VIA THE NATURAL RESOURCES CONSERVATION SERVICE WEB SOIL SURVEY (WEBSOILSURVEY.SC.EGOV.USDA.GOV.)
4. DOUBLE RING INFILTROMETER TESTS AND TESTPIT SOIL EVALUATIONS PERFORMED BY DELAWARE VALLEY SEPTICS, INC. ON DECEMBER 19, 2016.

REFERENCE PLAN #1 NOTES:

1. OUTLINE DESCRIPTION AND LOCATION SHOWN IN ACCORDANCE WITH ACTUAL FIELD INSTRUMENT SURVEY CONDUCTED UPON THE GROUNDS BY JEFFREY P TURNER, PLS FROM VARIOUS DEEDS AND PLANS OF RECORD; SURVEY WAS PREFORMED WITHOUT THE BENEFIT OF A TITLE REPORT; PROPERTY MAY BE SUBJECT TO CERTAIN RIGHTS OF OTHERS.
2. CONTOURS PLOTTED FROM FIELD RUN SURVEY. GPS CONTROL WAS PERFORMED ONSITE TO ESTABLISH BENCHMARK. BENCHMARK DATUM NAD83
3. THERE IS IDENTIFIABLE FLOOD PLAIN AREAS WITHIN THE PROJECT SITE AS ILLUSTRATED ON COMMUNITY PANEL NUMBER 42029C0160F OF THE FLOOD INSURANCE RATE MAP AS PREPARED BY THE FEDERAL EMERGENCY MANAGEMENT AGENCY FOR THE TOWNSHIP OF WESTTOWN, PENNSYLVANIA. EFFECTIVE DATE 09–30–2016
4. EXISTING SUBSURFACE UTILITY INFORMATION INDICATED IS BASED UPON VISUAL FIELD INSPECTION BY JEFFERY P. TURNER, PLS. SUCH INFORMATION CONCERNING THE SIZE, LOCATION, DEPTH, QUANTITY, ETC. OF SUBSURFACE UTILITIES IS APPROXIMATE IN NATURE AND HAS BEEN OBTAINED AS A SUPPLEMENT TO THE SITE SURVEY. THE INFORMATION PROVIDED IS REPRESENTATIVE OF SUBSURFACE CONDITIONS ONLY AT LOCATIONS AND DEPTHS WHERE SUCH INFORMATION WAS OBTAINED. THERE IS NO EXPRESSED OR IMPLIED AGREEMENT THAT UTILITY SIZE, LOCATION, DEPTH, QUANTITY, ETC. AS SHOWN EXISTS BETWEEN EXPLORED LOCATIONS. ACCORDINGLY, UTILITY INFORMATION SHOWN SHOULD NOT BE RELIED UPON FOR CONSTRUCTION PURPOSES. IT IS INCUMBENT UPON THE CONTRACTOR TO VERIFY THE SIZE, LOCATION, DEPTH, QUANTITY, ETC. OF ALL UTILITIES BEFORE EXCAVATION.

EXISTING IMPERVIOUS COVERAGE:

HOUSE & STABLE	3,337 SF (1.6%)
ASPHALT	5,041 SF
WALLS, WALKS, ETC.	1,182 SF
TOTAL	9,560 SF (4.7%)

PROPOSED IMPERVIOUS COVERAGE:

HOUSE & STABLE	3,472 SF (1.7%)
ASPHALT	6,926 SF
PATIO	1,343 SF
WALLS, WALKS, ETC.	1,181 SF
TOTAL	12,922 SF (6.3%)
NET INCREASE	3,362 SF (1.6%)
MAXIMUM IMPERVIOUS	30,820 SF (15.0%)

GENERAL NOTES:

1. THE RESPONSIBILITY FOR THE CONTINUED MAINTENANCE AND OPERATION OF THE STORMWATER MANAGEMENT SYSTEMS AND OTHER ASSOCIATED FACILITIES WILL BE THE OBLIGATION OF THE PROPERTY OWNER.
2. THE STORMWATER MANAGEMENT SYSTEM HAS BEEN DESIGNED FOR THE PROPOSED IMPERVIOUS COVERAGE (9,362 SF). THIS INCLUDES THE PROPOSED IMPERVIOUS (8,362 SF) AND FUTURE IMPERVIOUS (1,000 SF) WHICH MAY GO UNCONTROLLED. THE EXISTING IMPERVIOUS TO REMAIN UNDISTURBED (4,560 SF) WAS NOT INCLUDED IN THE CALCULATIONS.
3. NO WETLANDS WERE OBSERVED WITHIN THE FLOODPLAIN BOUNDARY WITHIN THE SURVEY LIMITS.
4. AREAS WITHIN 50' OF WETLANDS AND WITHIN 100' OF STREAM ARE ALL CONTAINED WITHIN THE 50' SETBACK FROM FLOODPLAIN BOUNDARY.

LINETYPE LEGEND

- EXISTING PROPERTY LINE
- EXISTING ROW LINE
- BUILDING SETBACK LINE
- EXISTING FENCE LINE
- OHW — OVERHEAD ELECTRIC
- E — ELECTRIC LINE
- G — GAS LINE
- T/C — TELECOMMUNICATION LINE
- W — WATER LINE
- SS — SANITARY PIPE
- ST — EXISTING STORM PIPES
- 429 — EXISTING 1' CONTOUR
- 380 — EXISTING 5' CONTOUR
- REGULATED PRECAUTIONARY SLOPE
- REGULATED PROHIBITIVE SLOPE
- NON–REGULATED PRECAUTIONARY SLOPE
- NON–REGULATED PROHIBITIVE SLOPE
- PROPOSED BUILDING
- PROPOSED PAVING
- PROPOSED IMPERVIOUS WALKS, WALLS, ETC.

SOILS INFORMATION

SYMBOL	NAME	%SLOPE	HYDROLOGIC GROUP	DEPTH TO SH WATER	DEPTH TO BEDROCK
GdB	GLADSTONE GRAVELLY LOAM	3 TO 8 PERCENT SLOPES	B	6.6'+	5.0'–6.6'
GdC	GLADSTONE GRAVELLY LOAM	8 TO 15 PERCENT SLOPES	B	6.6'+	5.5'
Ha	HATBORO SILT LOAM	NOT RATED	B	0.0'–0.5'	5.0'–8.3'

NOTES: IF THE PROPOSED EROSION AND SEDIMENTATION CONTROL MEASURES ARE INSTALLED AND MAINTAINED PROPERLY, NO UNFORESEEN SOIL LIMITATIONS OR PROBLEMS ARE LIKELY. NEVERTHELESS, IF A PROBLEM DOES DEVELOP, THE DEVELOPER MUST TEMPORARILY SEED AND MULCH THE DISTURBED AREA. SUITABLE TOPSOIL SHALL BE IMPORTED TO SITE IF INADEQUATE QUANTITIES OF SUITABLE TOPSOIL EXIST ON SITE. ADEQUACY OF SOIL TO BE DETERMINED BY SITE GEOTECHNICAL ENGINEER IN CONJUNCTION WITH THE LANDSCAPE ARCHITECT. SOIL AMENDMENTS SHALL BE ADDED AS REQUIRED. ALL UNSUITABLE MATERIAL SHALL BE DISPOSED OF PROPERLY. SITE GEOTECHNICAL ENGINEER SHALL ALSO BE CONSULTED DURING WINTER GRADING OPERATIONS.

REV	DATE	COMMENTS
3	02/15/18	LAYOUT
2	06/15/17	PER TWP ENG
1	05/12/17	PER TWP ENG

ALL DOCUMENTS PREPARED OR FURNISHED BY ENGINEER AND INSTRUMENTS OF SERVICE, AND ENGINEER RETAINS AN OWNERSHIP AND PROPERTY INTEREST (INCLUDING THE COPYRIGHT AND THE RIGHT OF REUSE) IN SUCH DOCUMENTS, WHETHER OR NOT THE PROJECT IS COMPLETED. OWNER MAY RETAIN ONE CONFORMED COPY OF THE DOCUMENTS ON THE PROJECT, EXTENSIONS OF THE PROJECT, AND FOR RELATED USES OF THE OWNER, SUBJECT TO RECEIPT BY ENGINEER OF A SIGNED WRITTEN AGREEMENT PROTECTING ENGINEER'S RIGHTS IN THE DOCUMENTS AND SUBJECT TO THE FOLLOWING LIMITATIONS: (1) OWNER ACKNOWLEDGES THAT SUCH DOCUMENTS ARE NOT INTENDED OR REPRESENTED TO BE SUITABLE FOR REUSE BY OWNER OR OTHERS ON EXTENSIONS OF THE PROJECT, ON ANY OTHER PROJECT, OR FOR ANY USE OR PURPOSE OTHER THAN THE SPECIFIC PROJECT OR ADAPTATION BY ENGINEER; (2) ANY SUCH USE OR REUSE, OR ANY MODIFICATION OF THE DOCUMENTS, WITHOUT WRITTEN VERIFICATION, COMPLETION, OR ADAPTATION BY ENGINEER AS APPROPRIATE FOR THE SPECIFIC PURPOSE INTENDED, WILL BE AT OWNER'S SOLE RISK AND WITHOUT LIABILITY OR LEGAL EXPOSURE TO ENGINEER OR TO ITS OFFICERS, DIRECTORS, MEMBERS, PARTNERS, AGENTS, EMPLOYEES, AND CONSULTANTS; (3) OWNER SHALL INDEMNIFY AND HOLD HARMLESS ENGINEER AND ITS OFFICERS, DIRECTORS, MEMBERS, PARTNERS, AGENTS, EMPLOYEES, AND CONSULTANTS FROM ALL CLAIMS, DAMAGES, LOSSES, AND EXPENSES, INCLUDING ATTORNEYS' FEES, ARISING OUT OF OR RESULTING THEREFROM OF ANY SUCH USE OR REUSE OF THE DOCUMENTS WITHOUT WRITTEN VERIFICATION, COMPLETION, OR ADAPTATION BY ENGINEER; AND (4) SUCH LIMITED LICENSE TO OWNER SHALL NOT CREATE ANY RIGHTS IN THIRD PARTIES.

SEAL: COMMONWEALTH OF PENNSYLVANIA — REGISTERED PROFESSIONAL ENGINEER — CHRISTOPHER C. YOHN — PE073703

PROJECT: SINGLE FAMILY RESIDENTIAL BUILDING ADDITION

PROJECT ADDRESS: 218 SPRING ROAD, MALVERN, PA 19355

MUNICIPALITY: WILLISTOWN TOWNSHIP — COUNTY: CHESTER COUNTY

PLAN SET: SOIL AND EROSION AND STORMWATER PERMIT PLANS

SHEET NAME: POST CONSTRUCTION STORMWATER MANAGEMENT PLAN

PREPARED FOR: OWNER / APPLICANT
MONKEY FARM, LLC
P.O. BOX 1227
STUART, FL 34995

DATE: APRIL 11, 2017
SCALE: 1" = 20'
ONE CALL NUMBER: 2016–118–3739
DRAWN BY: CCY
PROJECT NUMBER: 16–037

PREPARED BY: YOHN ENGINEERING, LLC
555 SECOND AVENUE, SUITE B–205
COLLEGEVILLE, PA 19426
610–489–4580
WWW.YOHNENGINEERING.COM

YOHN Engineering, LLC

SHEET: 3 OF 6

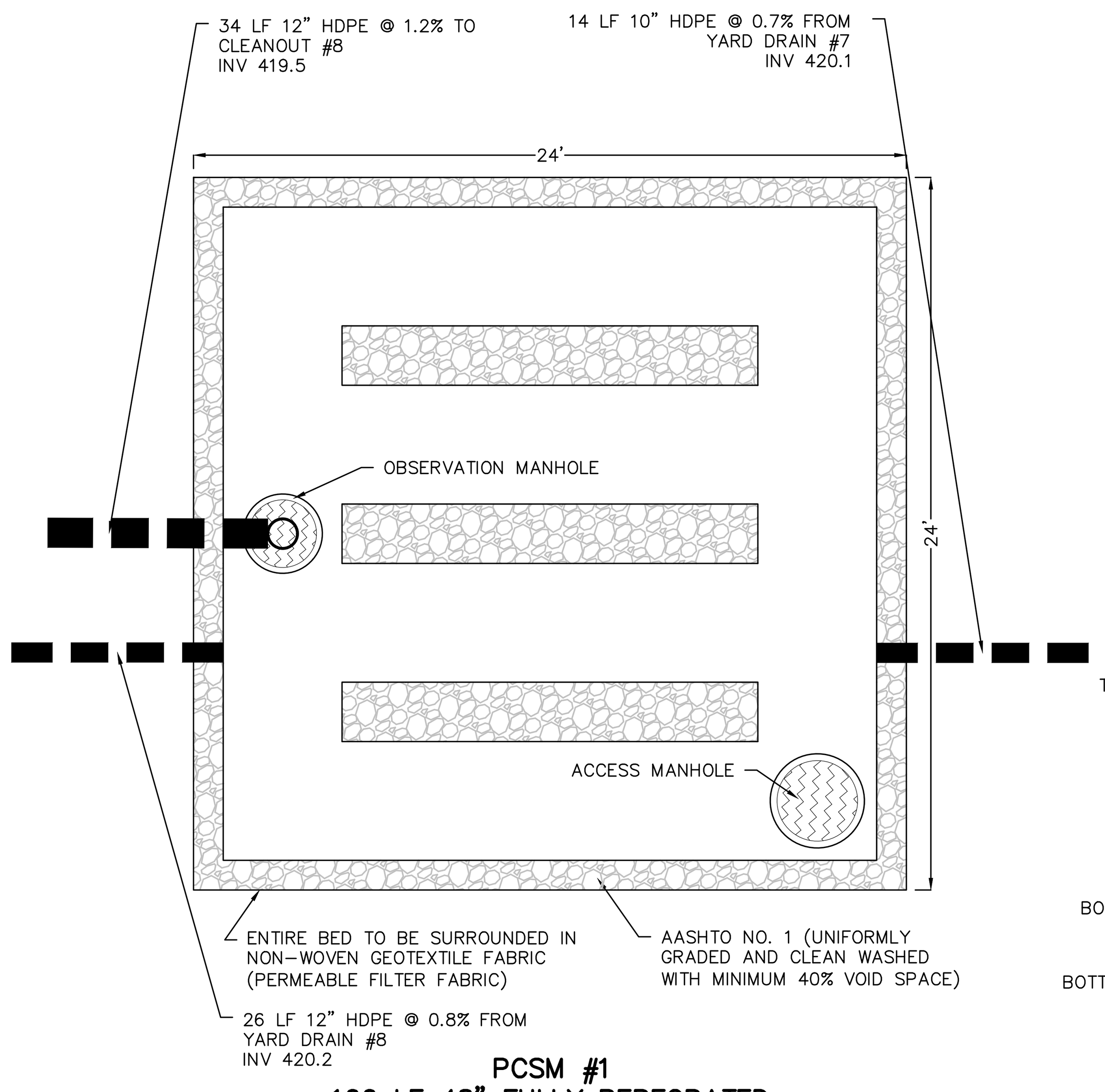

PCSM #1
100 LF 48" FULLY PERFORATED HCMP IN A 5'x24'x24' STONEBED
TOP OF STONE 424.0
BOT OF STONE 419.0
NOT TO SCALE

PIPE PERFORATION SPECIFICATIONS			
PIPE SIZE	MINIMUM PERFORATION DIAMETER	MINIMUM OPENING AREA	HOLES PER LINEAR FOOT
6"	5/16"	3.31 SQ. IN.	12
8"	5/16"	3.31 SQ. IN.	16
10"	5/16"	3.31 SQ. IN.	20
12"	5/16"	3.31 SQ. IN.	24
15"	5/16"	3.31 SQ. IN.	29
18"	5/16"	3.31 SQ. IN.	35
24"	5/16"	3.31 SQ. IN.	47
30"	5/16"	3.31 SQ. IN.	59
36"	5/16"	3.31 SQ. IN.	71
48"	5/16"	3.31 SQ. IN.	94
60"	5/16"	3.31 SQ. IN.	118
72"	5/16"	3.31 SQ. IN.	141

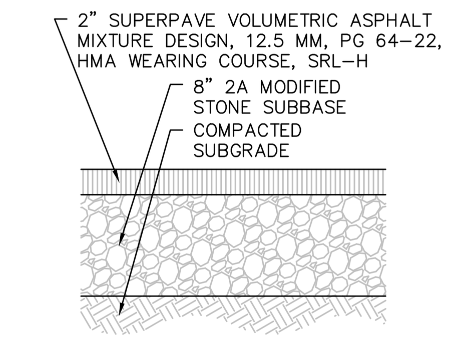

INDIVIDUAL DRIVEWAY SECTION
NOT TO SCALE

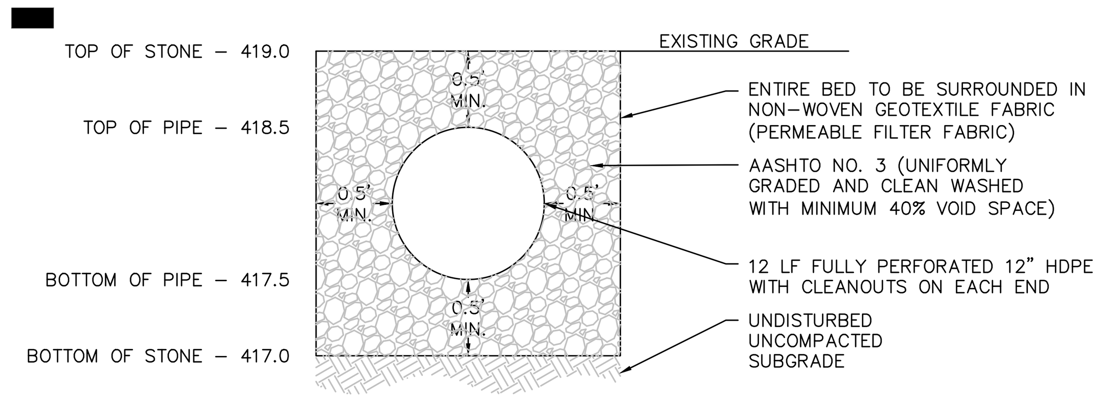

2'x2'x12' SPREADER CROSS SECTION
NOT TO SCALE

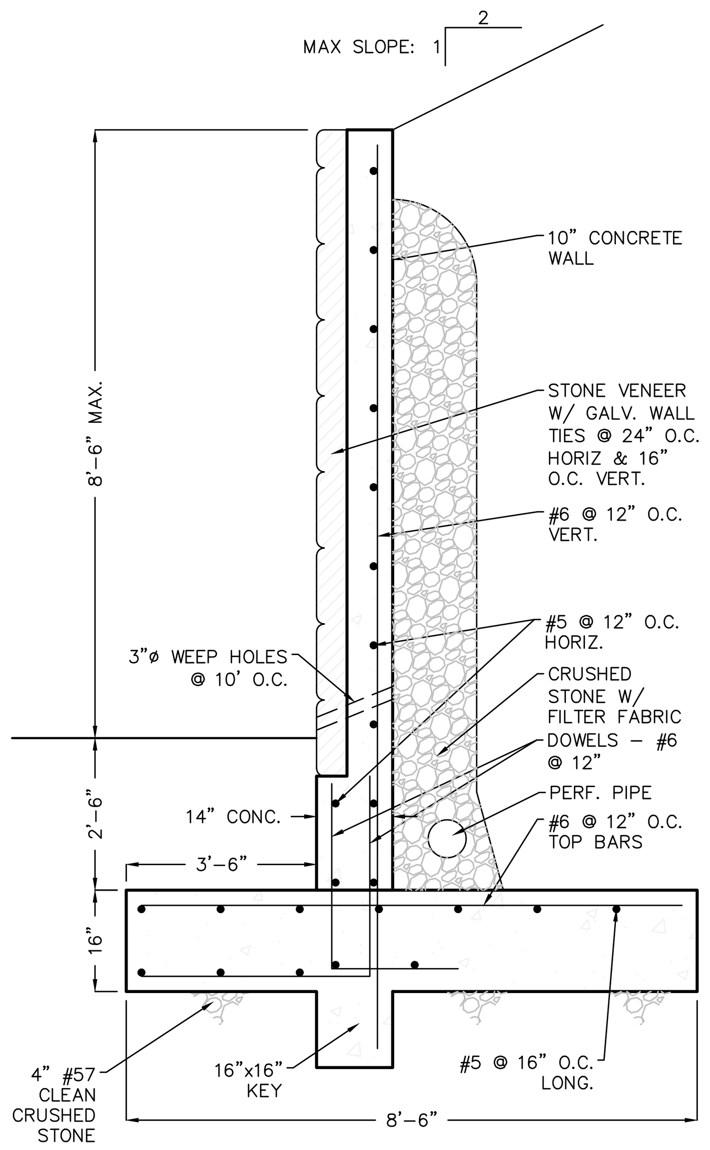

RETAINING WALL DETAIL (7'-6" MAX)
NOT TO SCALE

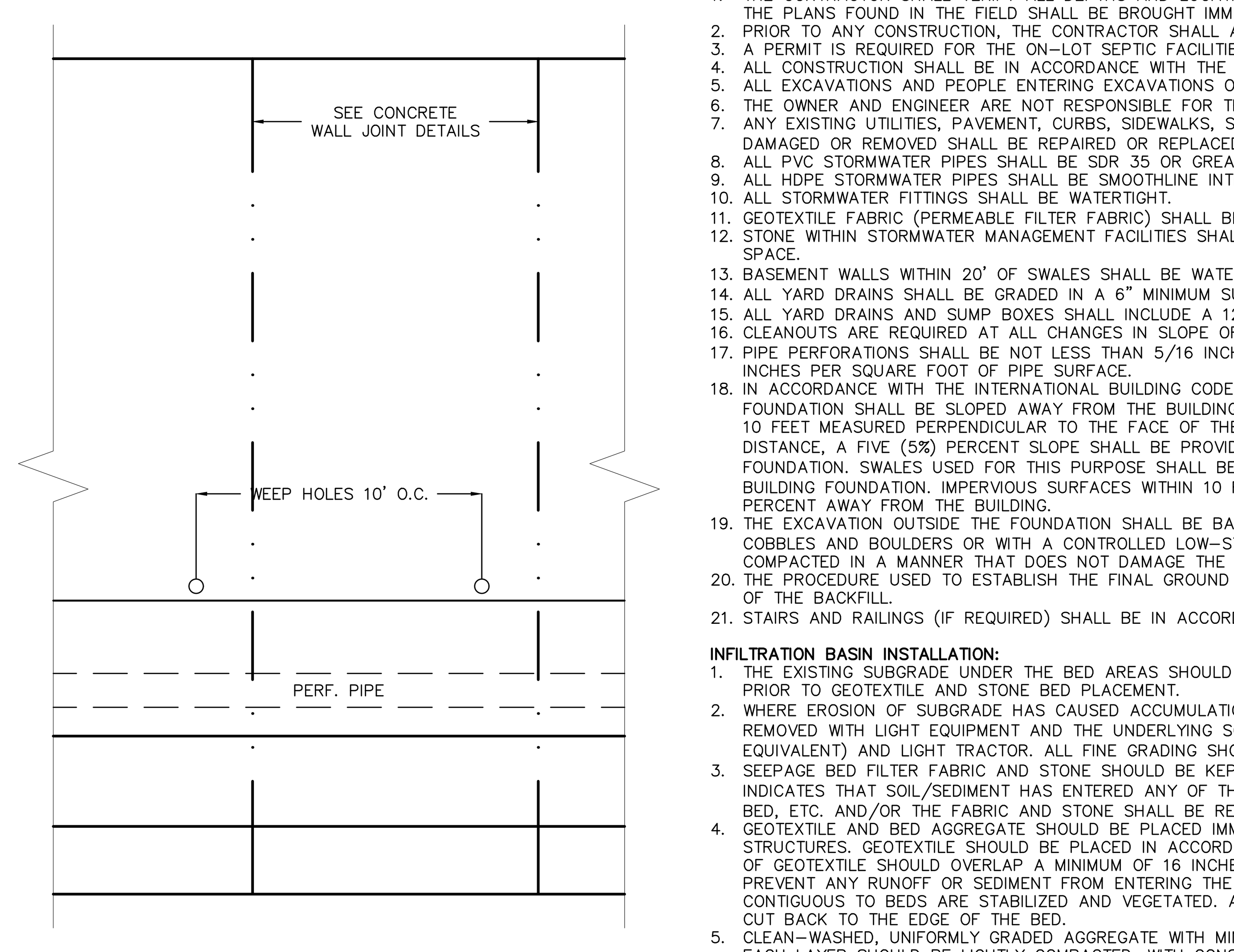

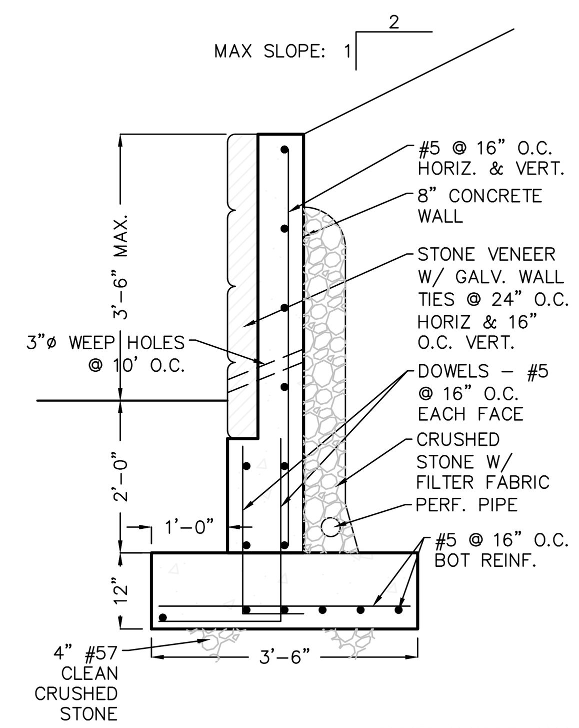

RETAINING WALL DETAIL (3'-6" MAX)
NOT TO SCALE

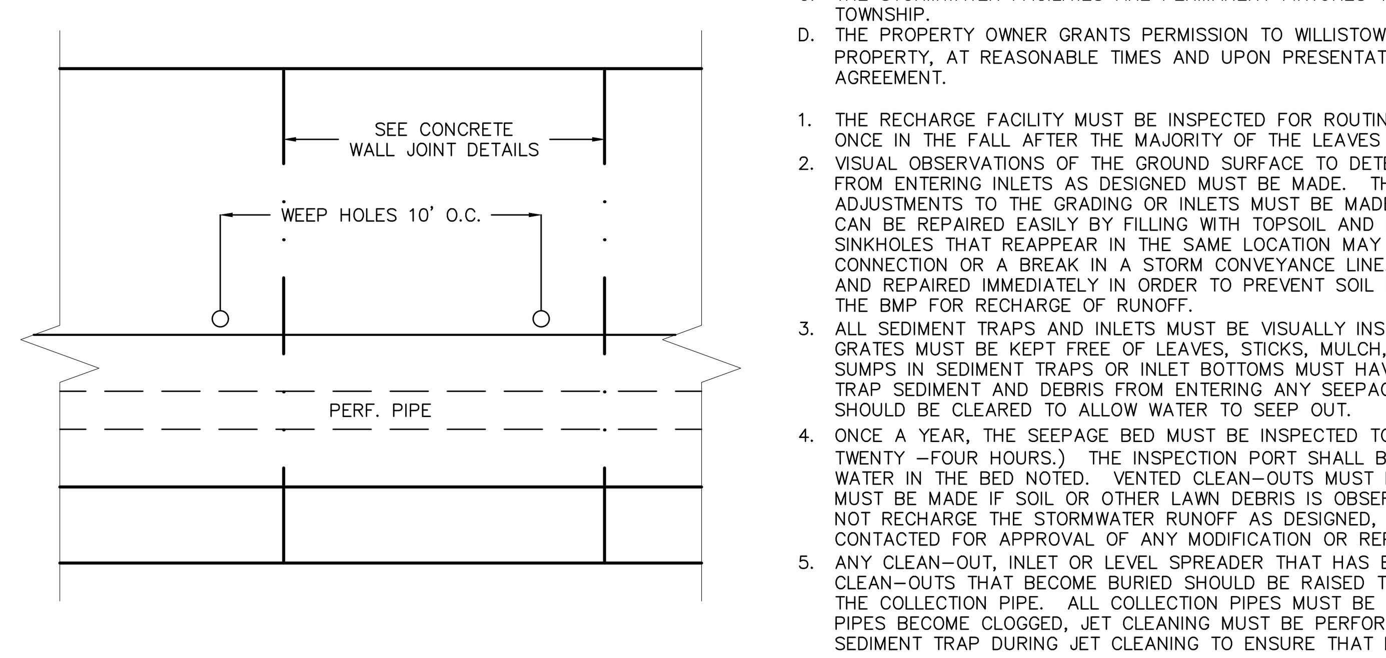

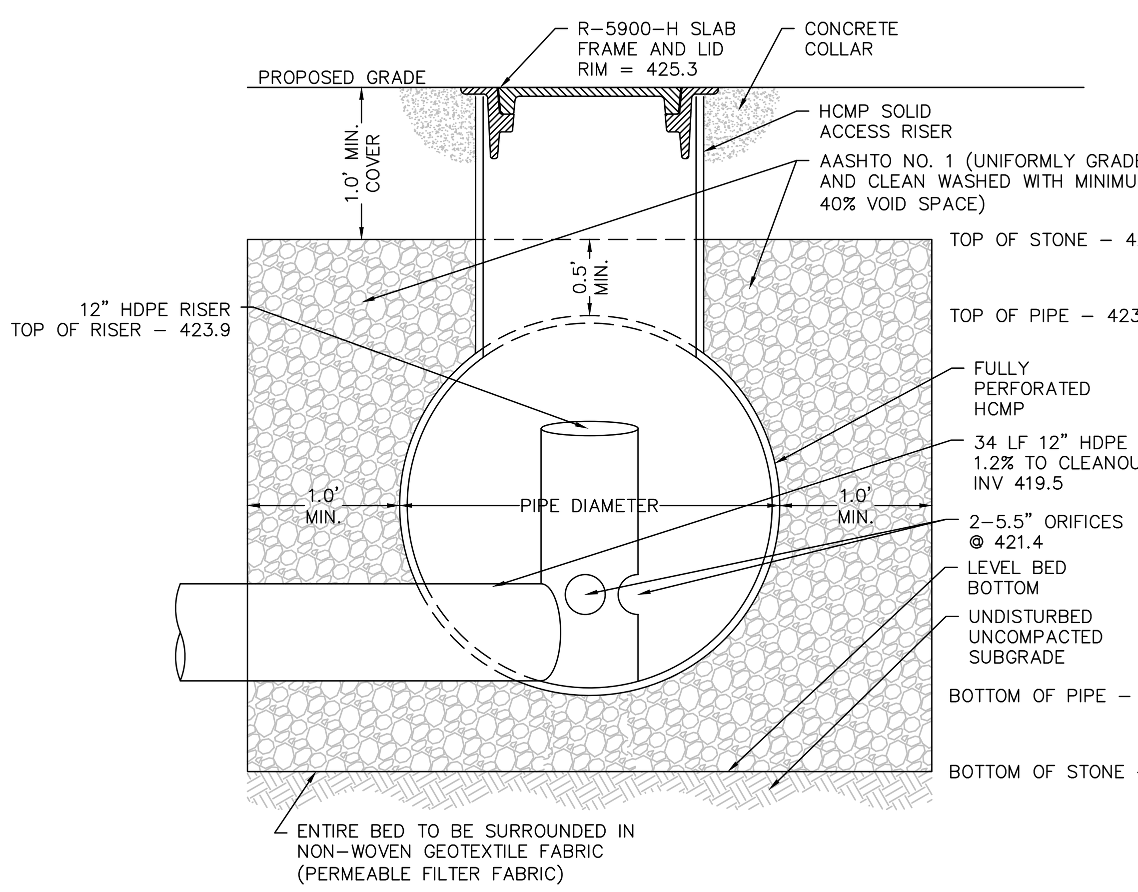

PCSM OBSERVATION MANHOLE CROSS SECTION
NOT TO SCALE

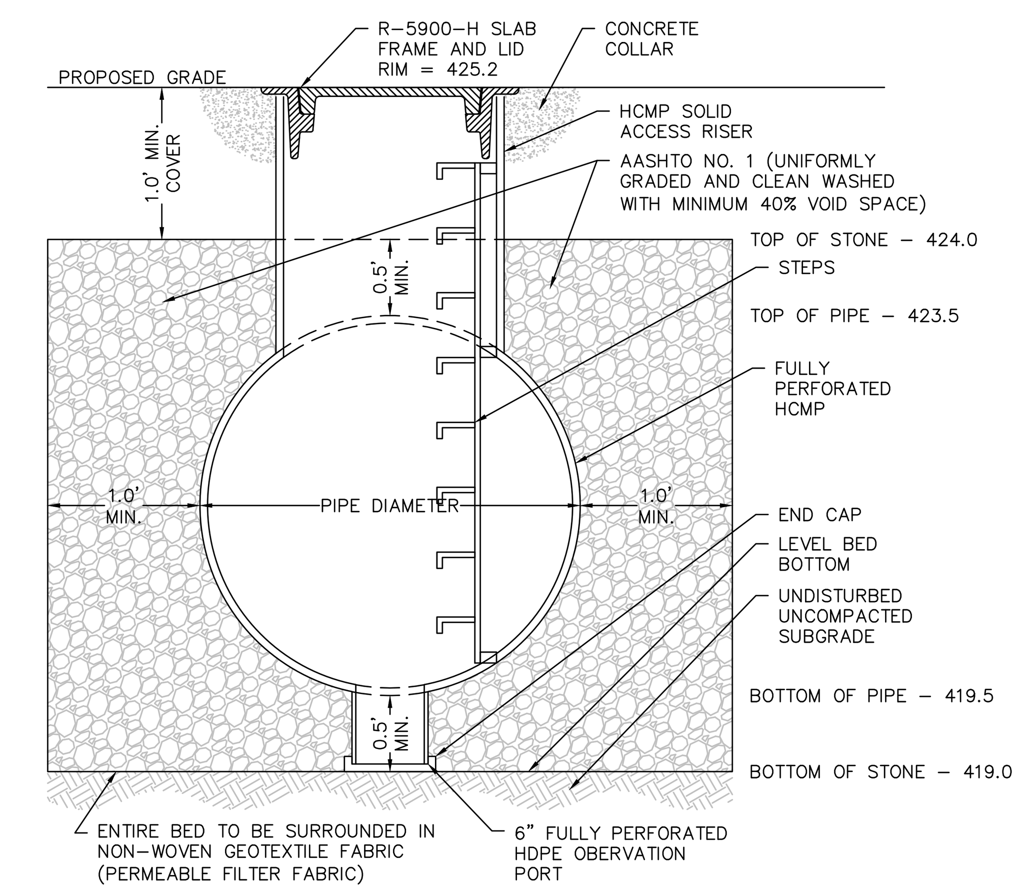

PCSM ACCESS MANHOLE CROSS SECTION
NOT TO SCALE

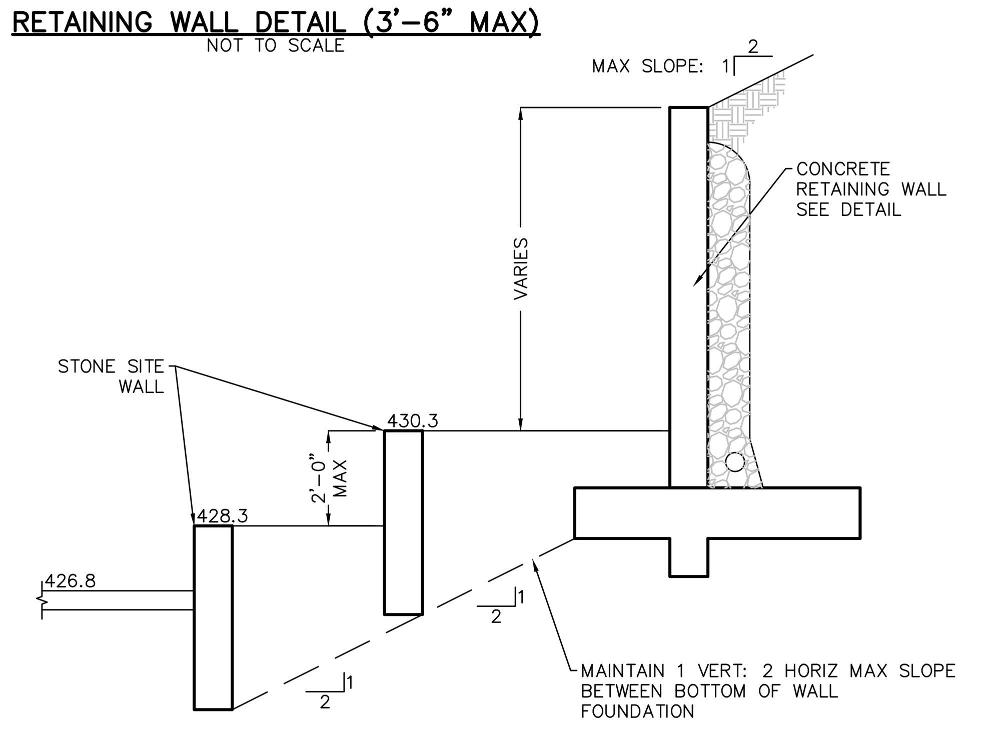

RETAINING WALL SECTION
NOT TO SCALE

CONSTRUCTION NOTES:

1. THE CONTRACTOR SHALL VERIFY ALL DEPTHS AND LOCATIONS OF EXISTING UTILITIES PRIOR TO ANY CONSTRUCTION. ANY DISCREPANCIES WITH THE PLANS FOUND IN THE FIELD SHALL BE BROUGHT IMMEDIATELY TO THE ATTENTION OF THE OWNER AND ENGINEER.
2. PRIOR TO ANY CONSTRUCTION, THE CONTRACTOR SHALL APPLY FOR AND SECURE ALL PROPER PERMITS FROM THE APPROPRIATE AUTHORITIES.
3. A PERMIT IS REQUIRED FOR THE ON-LOT SEPTIC FACILITIES FROM THE CHESTER COUNTY HEALTH DEPARTMENT.
4. ALL CONSTRUCTION SHALL BE IN ACCORDANCE WITH THE WESTTOWN TOWNSHIP STANDARDS.
5. ALL EXCAVATIONS AND PEOPLE ENTERING EXCAVATIONS OR OTHER BELOW GRADE STRUCTURES SHALL COMPLY WITH OSHA REQUIREMENTS.
6. THE OWNER AND ENGINEER ARE NOT RESPONSIBLE FOR THE CONTRACTOR'S MEANS AND METHODS OF CONSTRUCTION.
7. ANY EXISTING UTILITIES, PAVEMENT, CURBS, SIDEWALKS, STRUCTURES, TREES, ETC., NOT PLANNED FOR REPAIR OR REMOVAL THAT ARE DAMAGED OR REMOVED SHALL BE REPAIRED OR REPLACED AT CONTRACTOR'S EXPENSE.
8. ALL PVC STORMWATER PIPES SHALL BE SDR 35 OR GREATER.
9. ALL HDPE STORMWATER PIPES SHALL BE SMOOTHLINE INTERIOR.
10. ALL STORMWATER FITTINGS SHALL BE WATERTIGHT.
11. GEOTEXTILE FABRIC (PERMEABLE FILTER FABRIC) SHALL BE CLASS 1 NON-WOVEN AND SHALL COMPLY WITH PENNDOT SPECIFICATIONS.
12. STONE WITHIN STORMWATER MANAGEMENT FACILITIES SHALL BE CLEAN-WASHED, UNIFORMLY GRADED AGGREGATE WITH MINIMUM 40% VOID SPACE.
13. BASEMENT WALLS WITHIN 20' OF SWALES SHALL BE WATERPROOFED.
14. ALL YARD DRAINS SHALL BE GRADED IN A 6" MINIMUM SUMP CONDITION.
15. ALL YARD DRAINS AND SUMP BOXES SHALL INCLUDE A 12" MINIMUM SUMP BELOW THE LOWEST INVERT ELEVATION.
16. CLEANOUTS ARE REQUIRED AT ALL CHANGES IN SLOPE OR DIRECTION.
17. PIPE PERFORATIONS SHALL BE NOT LESS THAN 5/16 INCH IN DIAMETER AND PROVIDE AN OPENING AREA NOT LESS THAN 3.31 SQUARE INCHES PER SQUARE FOOT OF PIPE SURFACE.
18. IN ACCORDANCE WITH THE INTERNATIONAL BUILDING CODE SECTION 1804.3 SITE GRADING, THE GROUND IMMEDIATELY ADJACENT TO THE FOUNDATION SHALL BE SLOPED AWAY FROM THE BUILDING AT A SLOPE OF NOT LESS THAN FIVE (5%) PERCENT FOR A MINIMUM DISTANCE OF 10 FEET MEASURED PERPENDICULAR TO THE FACE OF THE WALL. IF PHYSICAL OBSTRUCTIONS OR LOT LINES PROHIBIT 10 FEET OF HORIZONTAL DISTANCE, A FIVE (5%) PERCENT SLOPE SHALL BE PROVIDED TO AN APPROVED ALTERNATIVE METHOD OF DIVERTING WATER AWAY FROM THE FOUNDATION. SWALES USED FOR THIS PURPOSE SHALL BE SLOPED A MINIMUM OF TWO (2%) PERCENT WHERE LOCATED WITHIN 10 FEET OF THE BUILDING FOUNDATION. IMPERVIOUS SURFACES WITHIN 10 FEET OF THE BUILDING FOUNDATION SHALL BE SLOPED A MINIMUM OF TWO (2%) PERCENT AWAY FROM THE BUILDING.
19. THE EXCAVATION OUTSIDE THE FOUNDATION SHALL BE BACKFILLED WITH SOIL THAT IS FREE OF ORGANIC MATERIAL, CONSTRUCTION DEBRIS, COBBLES AND BOULDERS OR WITH A CONTROLLED LOW-STRENGTH MATERIAL (CLSM). THE BACKFILL SHALL BE PLACED IN LIFTS AND COMPACTED IN A MANNER THAT DOES NOT DAMAGE THE FOUNDATION OR THE WATERPROOFING OR DAMPPROOFING MATERIAL.
20. THE PROCEDURE USED TO ESTABLISH THE FINAL GROUND LEVEL ADJACENT TO THE FOUNDATION SHALL ACCOUNT FOR ADDITIONAL SETTLEMENT OF THE BACKFILL.
21. STAIRS AND RAILINGS (IF REQUIRED) SHALL BE IN ACCORDANCE WITH THE WESTTOWN TOWNSHIP STANDARDS.

INFILTRATION BASIN INSTALLATION:

1. THE EXISTING SUBGRADE UNDER THE BED AREAS SHOULD NOT BE COMPACTED OR SUBJECT TO EXCESSIVE CONSTRUCTION EQUIPMENT TRAFFIC PRIOR TO GEOTEXTILE AND STONE BED PLACEMENT.
2. WHERE EROSION OF SUBGRADE HAS CAUSED ACCUMULATION OF FINE MATERIALS AND/OR SURFACE PONDING, THIS MATERIAL SHOULD BE REMOVED WITH LIGHT EQUIPMENT AND THE UNDERLYING SOILS SCARIFIED TO A MINIMUM DEPTH OF 6 INCHES WITH A YORK RAKE (OR EQUIVALENT) AND LIGHT TRACTOR. ALL FINE GRADING SHOULD BE DONE BY HAND. ALL BED BOTTOMS SHOULD BE AT LEVEL GRADE.
3. SEEPAGE BED FILTER FABRIC AND STONE SHOULD BE KEPT CLEAN OF SOIL/SEDIMENT DURING THE INSTALLATION PROCESS. IF INSPECTION INDICATES THAT SOIL/SEDIMENT HAS ENTERED ANY OF THE INFILTRATION SEEPAGE BEDS, IT SHALL BE CLEANED FROM THE FABRIC, STONE, BED, ETC. AND/OR THE FABRIC AND STONE SHALL BE REPLACED.
4. GEOTEXTILE AND BED AGGREGATE SHOULD BE PLACED IMMEDIATELY AFTER APPROVAL OF SUBGRADE PREPARATION AND INSTALLATION OF STRUCTURES. GEOTEXTILE SHOULD BE PLACED IN ACCORDANCE WITH MANUFACTURER'S STANDARDS AND RECOMMENDATIONS. ADJACENT STRIPS OF GEOTEXTILE SHOULD OVERLAP A MINIMUM OF 16 INCHES. IT SHOULD ALSO BE SECURED AT LEAST 4 FEET OUTSIDE OF BED IN ORDER TO PREVENT ANY RUNOFF OR SEDIMENT FROM ENTERING THE STORAGE BED. THIS EDGE STRIP SHOULD REMAIN IN PLACE UNTIL ALL BARE SOILS CONTIGUOUS TO BEDS ARE STABILIZED AND VEGETATED. AS THE SITE IS FULLY STABILIZED, EXCESS GEOTEXTILE ALONG BED EDGES CAN BE CUT BACK TO THE EDGE OF THE BED.
5. CLEAN-WASHED, UNIFORMLY GRADED AGGREGATE WITH MINIMUM 40% VOID SPACE SHOULD BE PLACED IN THE BED IN MAXIMUM 8-INCH LIFTS. EACH LAYER SHOULD BE LIGHTLY COMPACTED, WITH CONSTRUCTION EQUIPMENT KEPT OFF THE BED BOTTOM AS MUCH AS POSSIBLE.
6. APPROVED SOIL MEDIA SHOULD BE PLACED OVER INFILTRATION BED IN MAXIMUM 6-INCH LIFTS.

STORMWATER MANAGEMENT OPERATION AND MAINTENANCE PROCEDURES:

A. THE RESPONSIBILITY FOR THE INSTALLATION, MAINTENANCE AND OPERATION OF THE STORMWATER MANAGEMENT SYSTEM AND OTHER ASSOCIATED FACILITIES DURING CONSTRUCTION SHALL BE THE OBLIGATION OF THE CONTRACTOR.
B. THE RESPONSIBILITY FOR THE CONTINUED MAINTENANCE AND OPERATION OF THE STORMWATER MANAGEMENT SYSTEM AND OTHER ASSOCIATED FACILITIES SHALL BE THE OBLIGATION OF THE PROPERTY OWNER.
C. THE STORMWATER FACILITIES ARE PERMANENT FIXTURES THAT CANNOT BE ALTERED OR REMOVED WITHOUT THE APPROVAL OF WESTTOWN TOWNSHIP.
D. THE PROPERTY OWNER GRANTS PERMISSION TO WILLISTOWN TOWNSHIP, ITS AUTHORIZED AGENTS, AND EMPLOYEES TO ENTER UPON THE PROPERTY, AT REASONABLE TIMES AND UPON PRESENTATION OF PROPER IDENTIFICATION, TO INSPECT THE BMP(S) AS SPECIFIED BY THE O&M AGREEMENT.

1. THE RECHARGE FACILITY MUST BE INSPECTED FOR ROUTINE MAINTENANCE A MINIMUM OF TWO TIMES A YEAR, ONCE IN THE EARLY SPRING AND ONCE IN THE FALL AFTER THE MAJORITY OF THE LEAVES HAVE FALLEN.
2. VISUAL OBSERVATIONS OF THE GROUND SURFACE TO DETECT PONDING OF WATER OR GROUND SETTLEMENTS THAT WOULD PREVENT RUNOFF FROM ENTERING INLETS AS DESIGNED MUST BE MADE. THE DRAINAGE AREAS DESIGNED FOR THE SYSTEM MUST BE MAINTAINED. ADJUSTMENTS TO THE GRADING OR INLETS MUST BE MADE TO ENSURE THAT THE SYSTEM IS FUNCTIONING AS DESIGNED. SMALL SINKHOLES CAN BE REPAIRED EASILY BY FILLING WITH TOPSOIL AND MAY BE THE RESULT OF SETTLEMENT OF THE SOIL. LARGER SINKHOLES OR SINKHOLES THAT REAPPEAR IN THE SAME LOCATION MAY INDICATE A BREACH IN THE GEOTEXTILE LINER, INLET BOX STRUCTURE, PIPE CONNECTION OR A BREAK IN A STORM CONVEYANCE LINE. THESE TYPES OF SINKHOLES MUST BE EXCAVATED AND THE FAILURE IDENTIFIED AND REPAIRED IMMEDIATELY IN ORDER TO PREVENT SOIL FROM ENTERING THE SEEPAGE BED AND CLOGGING IT OR REDUCING THE CAPACITY OF THE BMP FOR RECHARGE OF RUNOFF.
3. ALL SEDIMENT TRAPS AND INLETS MUST BE VISUALLY INSPECTED SEVERAL TIMES A YEAR FOR ACCUMULATED SOIL AND DEBRIS. INLET GRATES MUST BE KEPT FREE OF LEAVES, STICKS, MULCH, AND OTHER LAWN DEBRIS OR TRASH THAT WOULD PREVENT INFLOW OF RUNOFF. SUMPS IN SEDIMENT TRAPS OR INLET BOTTOMS MUST HAVE ACCUMULATED SEDIMENT REMOVED TO ENSURE DESIGN CAPACITY SUFFICIENT TO TRAP SEDIMENT AND DEBRIS FROM ENTERING ANY SEEPAGE BED. ANY WEEP HOLES IN THE BOTTOM OF THE INLETS OR SEDIMENT TRAP SHOULD BE CLEARED TO ALLOW WATER TO SEEP OUT.
4. ONCE A YEAR, THE SEEPAGE BED MUST BE INSPECTED TO DETERMINE OF IT IS DRAINING WITHIN THE REQUIRED TIME PERIOD (USUALLY TWENTY -FOUR HOURS.) THE INSPECTION PORT SHALL BE OPENED AT LEAST TWENTY-FOUR HOURS FOLLOWING A STORM AND THE LEVEL OF WATER IN THE BED NOTED. VENTED CLEAN-OUTS MUST BE CHECKED TO ENSURE OPENINGS ARE CLEAR. ADJUSTMENTS TO THE CLEAN-OUTS MUST BE MADE IF SOIL OR OTHER LAWN DEBRIS IS OBSERVED TO BE ENTERING THE SYSTEM. IF IT IS DETERMINED THAT THE SYSTEM WILL NOT RECHARGE THE STORMWATER RUNOFF AS DESIGNED, THE SYSTEM WILL NEED TO BE MODIFIED OR REPLACED. THE TOWNSHIP SHALL BE CONTACTED FOR APPROVAL OF ANY MODIFICATION OR REPLACEMENT OF THE SYSTEM.
5. ANY CLEAN-OUT, INLET OR LEVEL SPREADER THAT HAS BEEN DAMAGED BY LAWN EQUIPMENT MUST BE REPAIRED OR REPLACED. CLEAN-OUTS THAT BECOME BURIED SHOULD BE RAISED TO GRADE. THE CONFIGURATION MUST NOT ALLOW SOIL OR OTHER DEBRIS TO CLOG THE COLLECTION PIPE. ALL COLLECTION PIPES MUST BE CHECKED ANNUALLY TO ENSURE THEY ARE FLOWING FREELY. IF THE COLLECTION PIPES BECOME CLOGGED, JET CLEANING MUST BE PERFORMED AT THE CLEANOUT-OUTS. ADDITIONAL PROTECTION MUST BE MADE AT THE SEDIMENT TRAP DURING JET CLEANING TO ENSURE THAT DEBRIS IS NOT TRANSMITTED TO THE SEEPAGE BED.
6. THE LEVEL SPREADER, OUTLET PIPE OR CONNECTION OF THE OUTLET OF THE BMP MUST BE CHECKED TO ENSURE THAT IT IS PERMITTING FREE FLOW OF WATER OUT OF THE BMP. ACCUMULATED DEBRIS, SEDIMENT OR LEAVES SHALL BE REMOVED FROM ANY LEVEL/BUBBLE-UP SPREADER. RIPRAP ENERGY DISSIPATERS AT THE TERMINATION OF THE BMP OUTLET PIPE SHALL BE CHECK. STONE SHALL BE REPLACED WITH EQUAL OR LARGER SIZE STONE IF THE DISSIPATER IS OBSERVED TO BE INEFFECTIVE. ENDWALLS AND FLARED PIPE ENDS SHALL BE INSPECTED AND REPAIRED AS REQUIRED.
7. SMALL TREES THAT BEGIN TO GROW IN THE VICINITY OF SEEPAGE BEDS OR STRUCTURES MUST BE REMOVED TO ENSURE THAT THE ROOTS DO NOT PUNCTURE THE FILTER FABRIC OF THE SEEPAGE BED OR DAMAGE ANY STORMWATER COLLECTION/CONVEYANCE STRUCTURE.
8. ROOF GUTTER SYSTEMS THAT ARE INTEGRAL WITH THE SEEPAGE BED MUST BE FUNCTIONAL. REPAIRS TO GUTTERS THAT BECOME SEPARATED, SAG OR OTHERWISE DO NOT FUNCTION AS DESIGNED MUST BE MADE.
9. PREVENTATIVE MAINTENANCE WOULD INCLUDE REMOVAL OF LEAVES FROM GUTTER SYSTEMS AND LAWN AREAS AS SOON AS POSSIBLE TO AVOID CONTAMINATION OF CLOGGING OF THE SYSTEM. LOCATING LANDSCAPE-MULCHED AREAS AWAY FROM CONCENTRATED RUNOFF AREAS OR SWALES THAT COULD WASH MULCH INTO INLET OR LEVEL SPREADER IS RECOMMENDED.

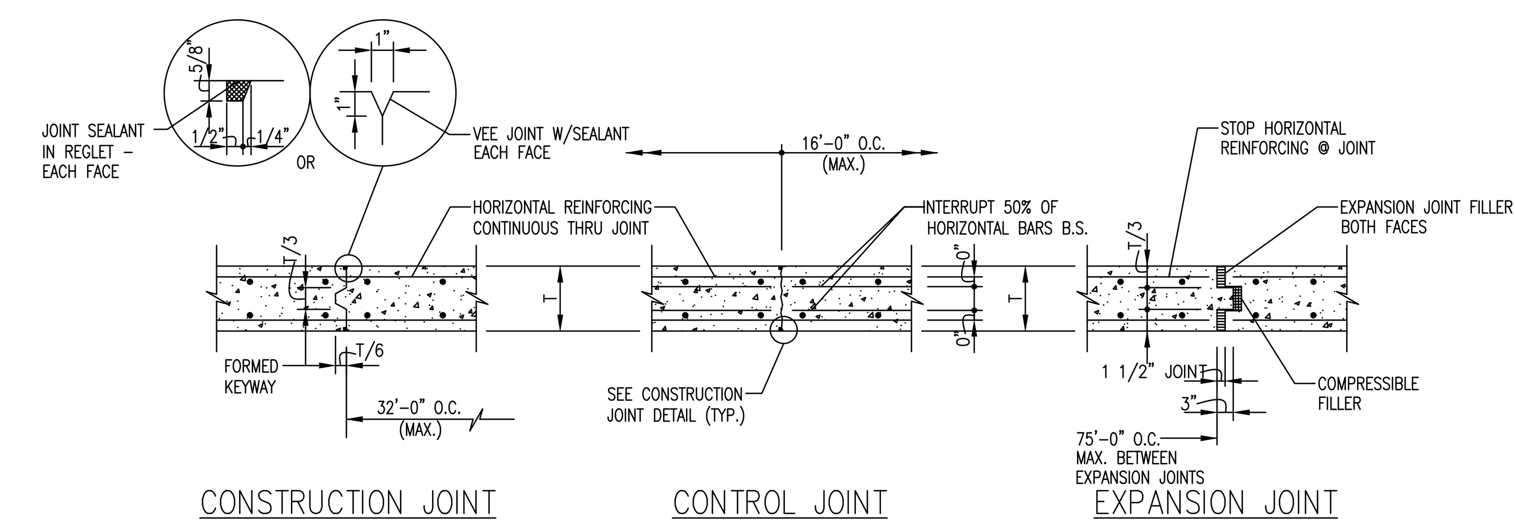

CONCRETE WALL JOINT DETAILS
NOT TO SCALE

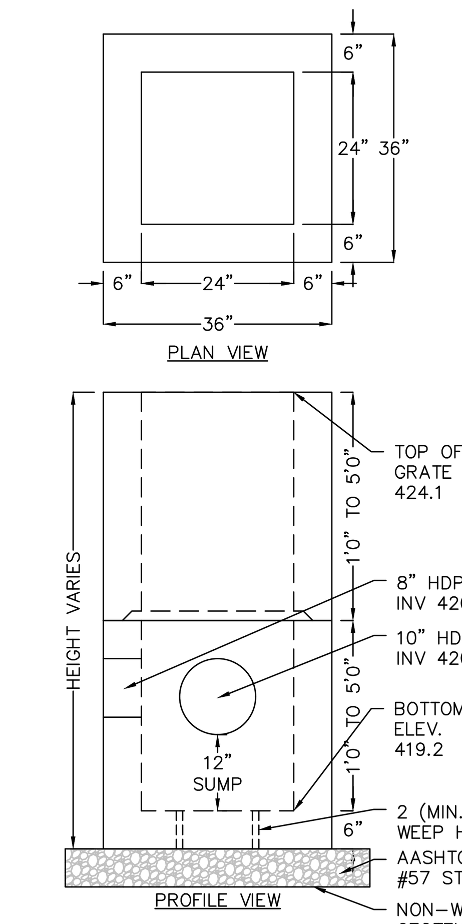

NOTES / SPECIFICATIONS:
1. SECTIONS MADE IN 6" INCREMENTS
2. CONCRETE STRENGTH: 4000 PSI MIN @ 28 DAYS
3. STRUCTURE CONFORMS TO ASTM C913-02
4. DESIGN: HS-25 TRAFFIC LOADING

2'x2' YARD DRAIN #7 DETAIL
NOT TO SCALE

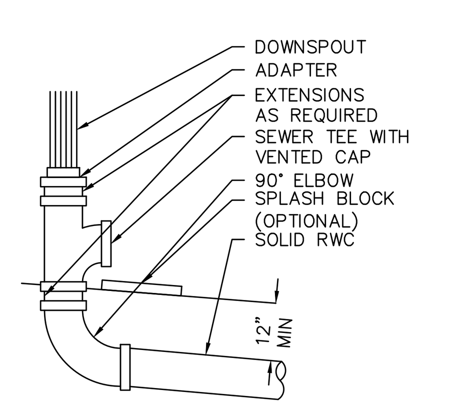

DOWNSPOUT CONNECTION DETAIL
NOT TO SCALE

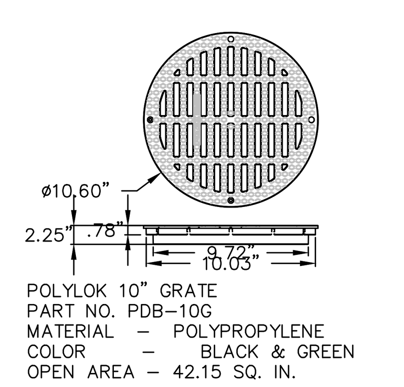

10" GRATE DETAIL (OR EQUAL)
NOT TO SCALE

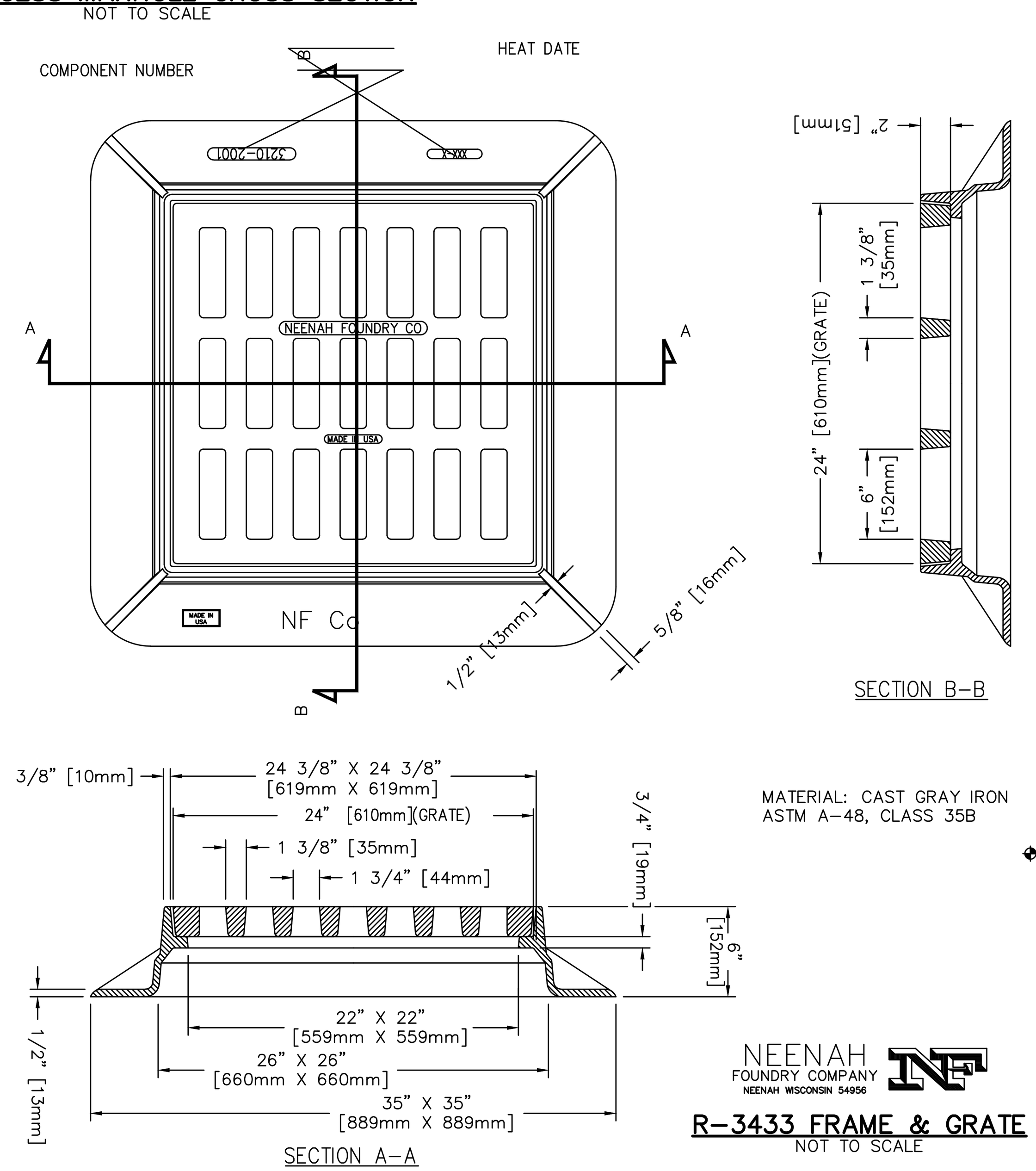

R-3433 FRAME & GRATE
NOT TO SCALE

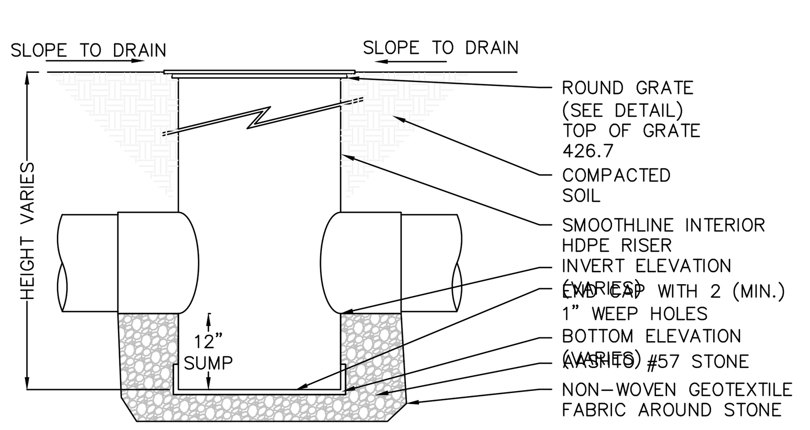

YARD DRAIN #1-3 DETAIL (OR APPROVED EQUAL)
NOT TO SCALE

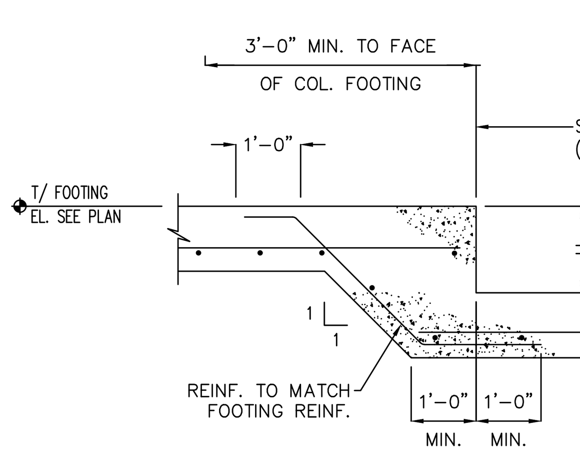

STEP IN WALL FOOTING DETAIL
NOT TO SCALE

ALL DOCUMENTS PREPARED OR FURNISHED BY ENGINEER ARE INSTRUMENTS OF SERVICE, AND ENGINEER RETAINS AN OWNERSHIP AND PROPERTY INTEREST (INCLUDING THE COPYRIGHT AND THE RIGHT OF REUSE) IN SUCH DOCUMENTS, WHETHER OR NOT THE PROJECT IS COMPLETED. OWNER SHALL HAVE A LIMITED LICENSE TO USE THE DOCUMENTS ON THE PROJECT, EXTENSIONS OF THE PROJECT, AND FOR RELATED USES OF THE OWNER, SUBJECT TO RECEIPT BY ENGINEER OF FULL PAYMENT FOR ALL SERVICES RELATING TO PREPARATION OF THE DOCUMENTS AND SUBJECT TO THE FOLLOWING LIMITATIONS: (1) OWNER ACKNOWLEDGES THAT SUCH DOCUMENTS ARE NOT INTENDED OR REPRESENTED TO BE SUITABLE FOR USE ON THE PROJECT UNLESS COMPLETED BY ENGINEER, OR FOR USE OR REUSE BY OWNER OR OTHERS ON EXTENSIONS OF THE PROJECT, ON ANY OTHER PROJECT, OR FOR ANY OTHER USE OR PURPOSE, WITHOUT WRITTEN VERIFICATION OR ADAPTATION BY ENGINEER; (2) ANY SUCH USE OR REUSE, OR ANY MODIFICATION OF THE DOCUMENTS, WITHOUT WRITTEN VERIFICATION, COMPLETION, OR ADAPTATION BY ENGINEER, AS APPROPRIATE FOR THE SPECIFIC PURPOSE INTENDED, WILL BE AT OWNER'S SOLE RISK AND WITHOUT LIABILITY OR LEGAL EXPOSURE TO ENGINEER OR TO ITS OFFICERS, DIRECTORS, MEMBERS, PARTNERS, AGENTS, EMPLOYEES, AND CONSULTANTS; (3) OWNER SHALL INDEMNIFY AND HOLD HARMLESS ENGINEER AND ITS OFFICERS, DIRECTORS, MEMBERS, PARTNERS, AGENTS, EMPLOYEES, AND CONSULTANTS FROM ALL CLAIMS, DAMAGES, LOSSES, AND EXPENSES, INCLUDING ATTORNEYS' FEES, ARISING OUT OF OR RESULTING FROM ANY USE, REUSE, OR MODIFICATION OF THE DOCUMENTS WITHOUT WRITTEN VERIFICATION, COMPLETION, OR ADAPTATION BY ENGINEER; AND (4) SUCH LIMITED LICENSE TO OWNER SHALL NOT CREATE ANY RIGHTS IN THIRD PARTIES.

REV	DATE	COMMENTS
3	02/15/18	LAYOUT
2	06/15/17	PER TWP ENG
1	05/12/17	PER TWP ENG

SEAL: COMMONWEALTH OF PENNSYLVANIA — REGISTERED PROFESSIONAL ENGINEER — CHRISTOPHER C. YOHN — PE073703

PROJECT: SINGLE FAMILY RESIDENTIAL BUILDING ADDITION
PROJECT ADDRESS: 218 SPRING ROAD, MALVERN, PA 19355
MUNICIPALITY: WILLISTOWN TOWNSHIP
COUNTY: CHESTER COUNTY
PLAN SET: SOIL AND EROSION AND STORMWATER PERMIT PLANS
SHEET NAME: POST CONSTRUCTION STORMWATER MANAGEMENT DETAILS

PREPARED FOR:
OWNER / APPLICANT
MONKEY FARM, LLC
P.O. BOX 1227
STUART, FL 34995

DATE:	APRIL 11, 2017
SCALE:	NO SCALE
ONE CALL NUMBER:	2016-118-3739
DRAWN BY:	CCY
PROJECT NUMBER:	16-037

PREPARED BY:
YOHN ENGINEERING, LLC
555 SECOND AVENUE, SUITE B-205
COLLEGEVILLE, PA 19426
610-489-4580
WWW.YOHNENGINEERING.COM

Serial Number: 2016-118-3739

CALL BEFORE YOU DIG!

PENNSYLVANIA LAW REQUIRES 3 WORKING DAYS NOTICE FOR CONSTRUCTION PHASE AND 10 WORKING DAYS IN DESIGN STAGE–STOP CALL

Pennsylvania One Call System, Inc.
1–800–242–1776

ALL LOCATIONS OF EXISTING UTILITIES, SHOWN ON THIS PLAN, HAVE BEEN DEVELOPED FROM FIELD LOCATIONS OF VISIBLE ABOVE GROUND UTILITY STRUCTURES AND INFORMATION FURNISHED BY THE UTILITY COMPANIES.

ALL LOCATIONS SHOULD BE CONSIDERED APPROXIMATE. COMPLETENESS OR ACCURACY OF THE LOCATIONS AND DEPTH OF ALL STRUCTURES CANNOT BE GUARANTEED. CONTRACTORS MUST VERIFY ALL LOCATIONS AND DEPTHS OF ALL UNDERGROUND UTILITIES AND FACILITIES BEFORE THE START OF ANY WORK.

AS PER ACT 187 HOUSE BILL 2627, BEFORE THE START OF ANY EXCAVATION WORK THE CONTRACTOR SHALL NOTIFY THE AFFECTED UTILITY COMPANIES THROUGH THE PENNSYLVANIA "ONE CALL SYSTEM" 1–800–242–1776 THREE DAYS PRIOR TO THE START OF ANY EXCAVATION. THE CONTRACTOR SHALL VERIFY THE LOCATION AND DEPTH OF ALL UTILITIES PRIOR TO THE START OF ANY CONSTRUCTION.

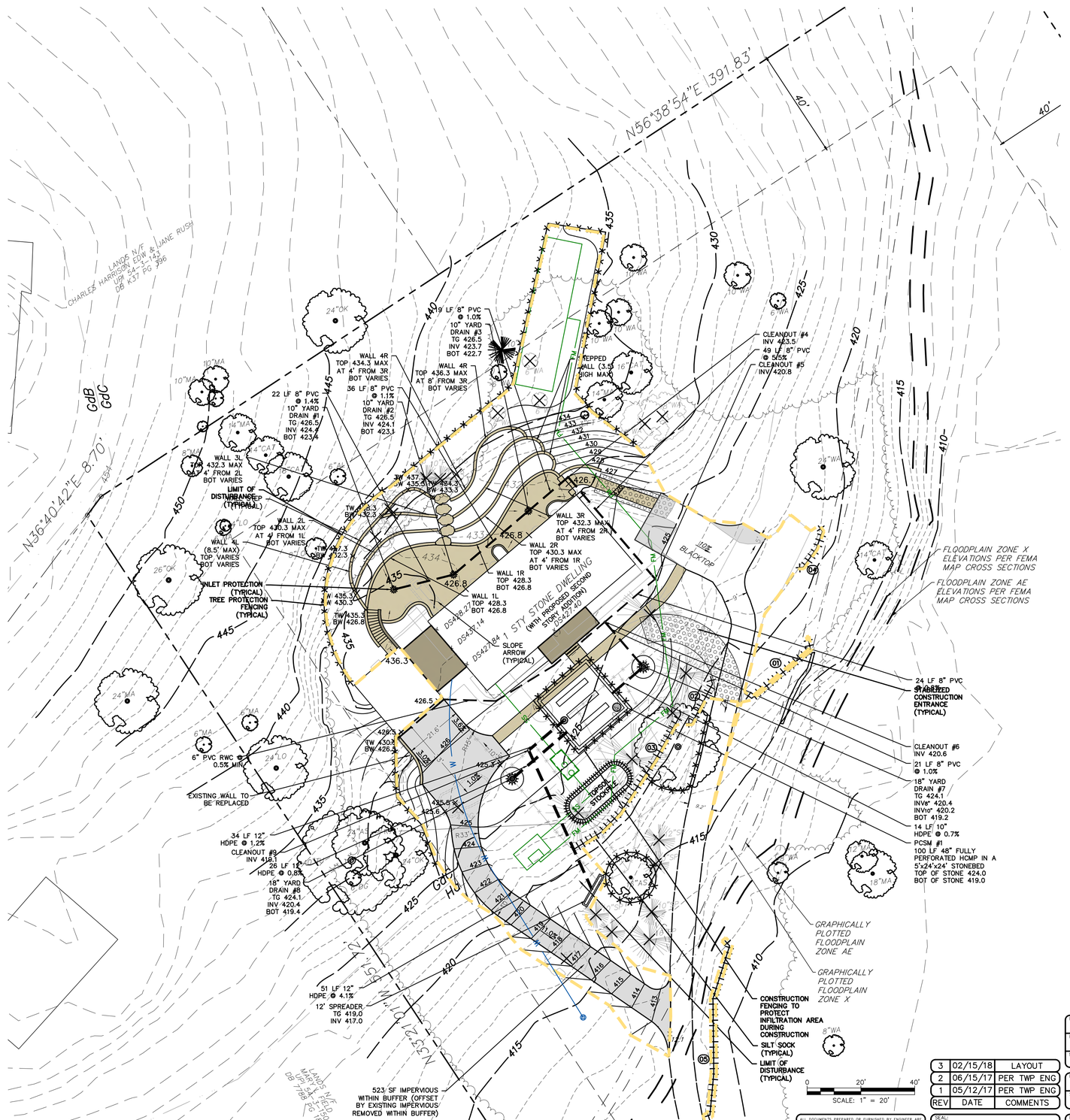

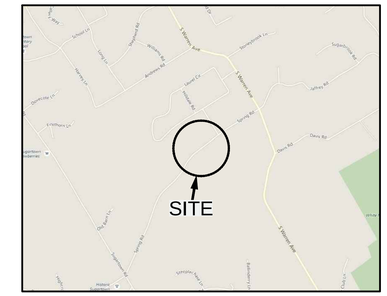

LOCATION MAP
SCALE: 1" = 2,000'

DISTURBANCE AREA: 23,500± SF (0.54 AC)

CONSTRUCTION TIMING AND SEQUENCE:

1. ANTICIPATED START OF CONSTRUCTION: MAY 2017.
2. NOTIFY THE TOWNSHIP CONSTRUCTION WILL BEGIN.
3. INSTALL THE STABILIZED CONSTRUCTION ENTRANCE AND POSTS AND ROPE OR TREE PROTECTION FENCING DELINEATING THE LIMITS OF DISTURBANCE AND PROTECTING THE AREAS PROPOSED FOR INFILTRATION. ALL CONSTRUCTION VEHICLES SHALL UTILIZE THIS ENTRANCE TO EXIT THE SITE.
4. INSTALL FILTER SOCKS AS SHOWN ON THE PLAN.
5. BEGIN REMOVAL OF EXISTING FEATURES DESIGNATED TO BE REMOVED AND DISPOSE OF PROPERLY.
6. CLEAR AND GRUB THE PORTIONS OF THE SITE WITHIN THE LIMITS OF DISTURBANCE. STRIP TOPSOIL AND STOCKPILE FOR FUTURE USE. SURROUND STOCKPILE WITH SILT FENCE AND IMMEDIATELY STABILIZE. UPON TEMPORARY CESSATION OF AN EARTH DISTURBANCE OR ANY STAGE OR PHASE OF AN ACTIVITY WHERE A CESSATION OF EARTH DISTURBANCE ACTIVITIES EXCEED 4 DAYS, THE SITE SHALL BE IMMEDIATELY SEEDED, MULCHED OR OTHERWISE PROTECTED FROM ACCELERATED EROSION AND SEDIMENTATION PENDING FUTURE EARTH DISTURBANCE ACTIVITIES.
9. EXCAVATE FOR THE PROPOSED FOUNDATION, CONSTRUCT AND BACKFILL.
10. CONCURRENT WITH BUILDING CONSTRUCTION, INSTALL THE PERMANENT STORMWATER MANAGEMENT FACILITIES. THE STORMWATER MANAGEMENT FACILITIES SHALL NOT RECEIVE RUNOFF UNTIL THE ENTIRE DRAINAGE AREA CONTRIBUTORY HAS ACHIEVED FINAL STABILIZATION.
11. ROUGH GRADE THE SITE. ANY WATER PUMPED FROM WORK AREAS SHALL BE TREATED FOR SEDIMENT REMOVAL PRIOR TO DISCHARGING TO A SURFACE WATER THROUGH THE USE OF A PUMPED WATER FILTER BAG OR OTHER APPROVED DEVICE.
12. INSTALL THE SITES UTILITIES AND THE STONE BASE FOR THE PROPOSED DRIVEWAY.
13. FINAL GRADE THE SITE AND INSTALL HARDSCAPING AND LANDSCAPING.
14. SPREAD TOPSOIL, SEED AND IMMEDIATELY STABILIZE.
15. REMOVE THE EROSION AND SEDIMENTATION CONTROLS AND IMMEDIATELY STABILIZE DENUDED AREAS.
16. ANTICIPATED END OF CONSTRUCTION: DECEMBER 2017.

LINETYPE LEGEND

- EXISTING PROPERTY LINE
- EXISTING ROW LINE
- BUILDING SETBACK LINE
- EXISTING FENCE LINE
- OHW — OVERHEAD ELECTRIC
- E — ELECTRIC LINE
- G — GAS LINE
- T/C — TELECOMMUNICATION LINE
- W — WATER LINE
- SS — SANITARY PIPE
- ST — EXISTING STORM PIPES
- 379 — EXISTING 1' CONTOUR
- 380 — EXISTING 5' CONTOUR
- PROPOSED BUILDING
- PROPOSED PAVING
- PROPOSED IMPERVIOUS WALKS, WALLS, ETC.
- STANDARD SILT FENCE
- LIMIT OF DISTURBANCE

SOILS INFORMATION

SYMBOL	NAME	%SLOPE	HYDROLOGIC GROUP	DEPTH TO SH WATER	DEPTH TO BEDROCK
GdB	GLADSTONE GRAVELLY LOAM	3 TO 8 PERCENT SLOPES	B	6.6'+	5.0'–6.6'
GdC	GLADSTONE GRAVELLY LOAM	8 TO 15 PERCENT SLOPES	B	6.6'+	5.5'
Ha	HATBORO SILT LOAM	NOT RATED	B	0.0'–0.5'	5.0'–8.3'

NOTES: IF THE PROPOSED EROSION AND SEDIMENTATION CONTROL MEASURES ARE INSTALLED AND MAINTAINED PROPERLY, NO UNFORESEEN SOIL LIMITATIONS OR PROBLEMS ARE LIKELY. NEVERTHELESS, IF A PROBLEM DOES DEVELOP, THE DEVELOPER MUST TEMPORARILY SEED AND MULCH THE DISTURBED AREA. SUITABLE TOPSOIL SHALL BE IMPORTED TO SITE IF INADEQUATE QUANTITIES OF SUITABLE TOPSOIL EXIST ON SITE. ADEQUACY OF SOIL TO BE DETERMINED BY SITE GEOTECHNICAL ENGINEER IN CONJUNCTION WITH THE LANDSCAPE ARCHITECT. SOIL AMENDMENTS SHALL BE ADDED AS REQUIRED. ALL UNSUITABLE MATERIAL SHALL BE DISPOSED OF PROPERLY. SITE GEOTECHNICAL ENGINEER SHALL ALSO BE CONSULTED DURING WINTER GRADING OPERATIONS.

REV	DATE	COMMENTS
3	02/15/18	LAYOUT
2	06/15/17	PER TWP ENG
1	05/12/17	PER TWP ENG

ALL DOCUMENTS PREPARED OR FURNISHED BY ENGINEER ARE INSTRUMENTS OF SERVICE THROUGH WHICH THE BENEFICIAL PURPOSE OF PROPERTY INTEREST (INCLUDING THE COPYRIGHT AND THE RIGHT OF REUSE) IN SUCH DOCUMENTS, WHETHER OR NOT THE PROJECT IS COMPLETED, IS DOCUMENTED. OWNER MAY USE SUCH DOCUMENTS ON THE PROJECT, EXTENSIONS OF THE PROJECT, AND FOR RELATED USES OF THE OWNER, SUBJECT TO RECEIPT BY ENGINEER OF COMPENSATION DUE FOR THE PRELIMINARY DESIGN OF THE PROJECT. DOCUMENTS ARE SUBJECT TO THE FOLLOWING LIMITATIONS: (1) OWNER ACKNOWLEDGES THAT SUCH DOCUMENTS ARE NOT INTENDED OR REPRESENTED TO BE SUITABLE FOR USE ON THE PROJECT UNLESS COMPLETED BY ENGINEER, AND FOR THE PROPER PURPOSE FOR WHICH THEY WERE INTENDED OF THE PROJECT, ON ANY OTHER PROJECT, OR FOR ANY OTHER USE OR PURPOSE, WITHOUT WRITTEN VERIFICATION OR ADAPTATION BY ENGINEER; (2) ANY SUCH USE OR REUSE, OR ANY MODIFICATION OF THE DOCUMENTS, WITHOUT WRITTEN VERIFICATION, COMPLETION, OR ADAPTATION BY ENGINEER, AS APPROPRIATE FOR THE SPECIFIC PURPOSE INTENDED, WILL BE AT OWNER'S SOLE RISK AND WITHOUT LIABILITY OR LEGAL EXPOSURE TO ENGINEER; (3) OWNER AGREES TO DEFEND, INDEMNIFY AND HOLD HARMLESS ENGINEER AND ENGINEER'S OFFICERS, DIRECTORS, MEMBERS, PARTNERS, AGENTS, EMPLOYEES, AND CONSULTANTS; (3) OWNER SHALL INDEMNIFY AND HOLD HARMLESS ENGINEER AND ENGINEER'S OFFICERS, DIRECTORS, MEMBERS, PARTNERS, AGENTS, EMPLOYEES, AND CONSULTANTS FROM ALL CLAIMS, DAMAGES, LOSSES, AND EXPENSES, INCLUDING ATTORNEYS' FEES, ARISING OUT OF OR PERTAINING TO OWNER'S USE OR REUSE OF THE DOCUMENTS, OR ANY DOCUMENTS WITHOUT WRITTEN VERIFICATION, COMPLETION, OR ADAPTATION BY ENGINEER; AND (4) SUCH LIMITED LICENSE TO OWNER SHALL NOT CREATE ANY RIGHTS IN THIRD PARTIES.

SEAL: COMMONWEALTH OF PENNSYLVANIA — REGISTERED PROFESSIONAL ENGINEER — CHRISTOPHER C. YOHN — PE073703

PROJECT: SINGLE FAMILY RESIDENTIAL BUILDING ADDITION

PROJECT ADDRESS: 218 SPRING ROAD, MALVERN, PA 19355

MUNICIPALITY: WILLISTOWN TOWNSHIP — COUNTY: CHESTER COUNTY

PLAN SET: SOIL AND EROSION AND STORMWATER PERMIT PLANS

SHEET NAME: EROSION AND SEDIMENTATION CONTROL PLAN

PREPARED FOR:
OWNER / APPLICANT
MONKEY FARM, LLC
P.O. BOX 1227
STUART, FL 34995

DATE: APRIL 11, 2017
SCALE: 1" = 20'
ONE CALL NUMBER: 2016–118–3739
DRAWN BY: CCY
PROJECT NUMBER: 16–037

PREPARED BY:
YOHN ENGINEERING, LLC
555 SECOND AVENUE, SUITE B–205
COLLEGEVILLE, PA 19426
610–489–4580
WWW.YOHNENGINEERING.COM

YOHN Engineering, LLC

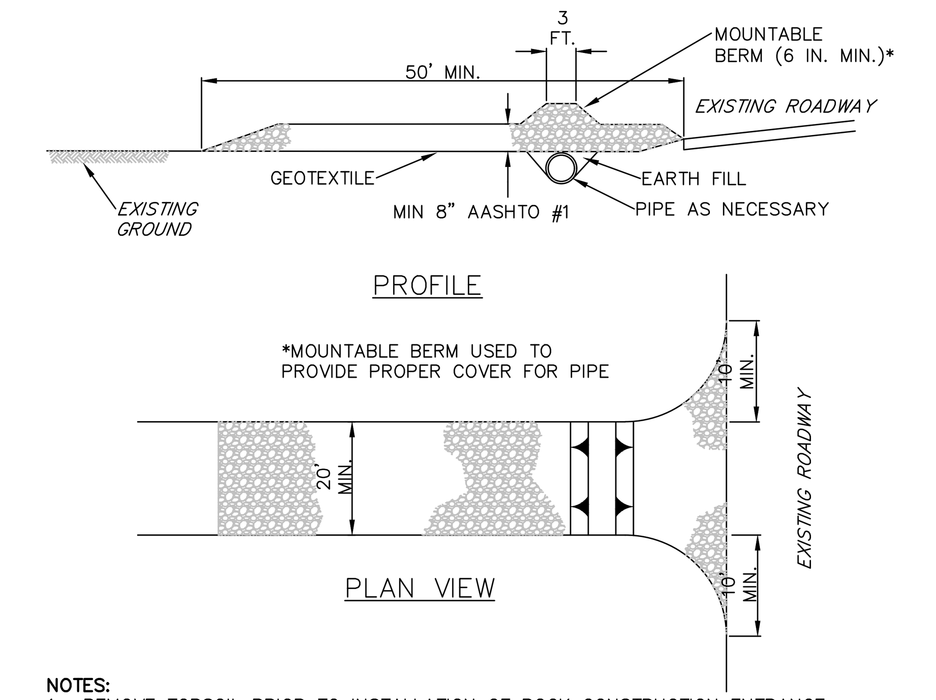

NOTES:
1. REMOVE TOPSOIL PRIOR TO INSTALLATION OF ROCK CONSTRUCTION ENTRANCE. EXTEND ROCK OVER FULL WIDTH OF ENTRANCE.
2. RUNOFF SHALL BE DIVERTED FROM ROADWAY TO A SUITABLE SEDIMENT REMOVAL BMP PRIOR TO ENTERING ROCK CONSTRUCTION ENTRANCE.
3. MOUNTABLE BERM SHALL BE INSTALLED WHEREVER OPTIONAL CULVERT PIPE IS USED AND PROPER PIPE COVER AS SPECIFIED BY MANUFACTURER IS NOT OTHERWISE PROVIDED. PIPE SHALL BE SIZED APPROPRIATELY FOR SIZE OF DITCH BEING CROSSED.
4. MAINTENANCE: ROCK CONSTRUCTION ENTRANCE THICKNESS SHALL BE CONSTANTLY MAINTAINED TO THE SPECIFIED DIMENSIONS BY ADDING ROCK. A STOCKPILE SHALL BE MAINTAINED ON SITE FOR THIS PURPOSE. ALL SEDIMENT DEPOSITED ON PAVED ROADWAYS SHALL BE REMOVED AND RETURNED TO THE CONSTRUCTION SITE IMMEDIATELY. IF EXCESSIVE AMOUNTS OF SEDIMENT ARE BEING DEPOSITED ON ROADWAY, EXTEND LENGTH OF ROCK CONSTRUCTION ENTRANCE BY 50 FOOT INCREMENTS UNTIL CONDITION IS ALLEVIATED OR INSTALL WASH RACK. WASHING THE ROADWAY OR SWEEPING THE DEPOSITS INTO ROADWAY DITCHES, SEWERS, CULVERTS, OR OTHER DRAINAGE COURSES IS NOT ACCEPTABLE.

STANDARD CONSTRUCTION DETAIL #3-1
ROCK CONSTRUCTION ENTRANCE

NOT TO SCALE

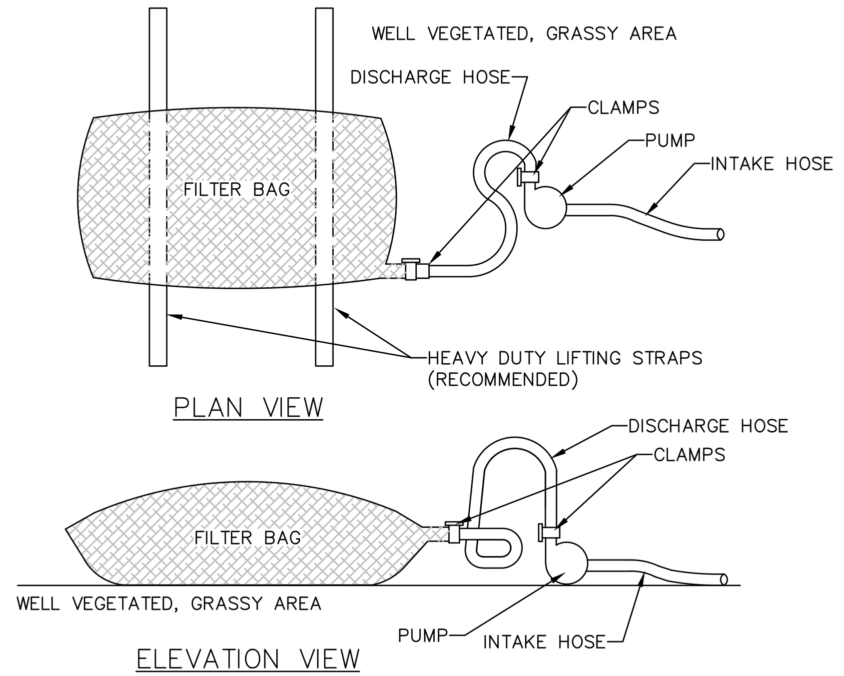

NOTES:
1. LOW VOLUME FILTER BAGS SHALL BE MADE FROM NON-WOVEN GEOTEXTILE MATERIAL SEWN WITH HIGH STRENGTH, DOUBLE STITCHED "J" TYPE SEAMS. THEY SHALL BE CAPABLE OF TRAPPING PARTICLES LARGER THAN 150 MICRONS. HIGH VOLUME FILTER BAGS SHALL BE MADE FROM WOVEN GEOTEXTILES THAT MEET THE FOLLOWING STANDARDS:

PROPERTY	TEST METHOD	MINIMUM STANDARD
AVG. WIDE WIDTH STRENGTH	ASTM D-4884	60 LB/IN
GRAB TENSILE	ASTM D-4632	205 LB
PUNCTURE	ASTM D-4833	110 LB
MULLEN BURST	ASTM D-3786	350 PSI
UV RESISTANCE	ASTM D-4355	70%
AOS % RETAINED	ASTM D-4751	80 SIEVE

2. A SUITABLE MEANS OF ACCESSING THE BAG WITH MACHINERY REQUIRED FOR DISPOSAL PURPOSES SHALL BE PROVIDED. FILTER BAGS SHALL BE REPLACED WHEN THEY BECOME 1/2 FULL OF SEDIMENT. SPARE BAGS SHALL BE KEPT AVAILABLE FOR REPLACEMENT OF THOSE THAT HAVE FAILED OR ARE FILLED. BAGS SHALL BE PLACED ON STRAPS TO FACILITATE REMOVAL UNLESS BAGS COME WITH LIFTING STRAPS ALREADY ATTACHED.
3. BAGS SHALL BE LOCATED IN WELL-VEGETATED (GRASSY) AREA, AND DISCHARGE ONTO STABLE, EROSION RESISTANT AREAS. WHERE THIS IS NOT POSSIBLE, A GEOTEXTILE UNDERLAYMENT AND FLOW PATH SHALL BE PROVIDED. BAGS MAY BE PLACED ON FILTER STONE TO INCREASE DISCHARGE CAPACITY. BAGS SHALL NOT BE PLACED ON SLOPES GREATER THAN 5%. FOR SLOPES EXCEEDING 5%, CLEAN ROCK OR OTHER NON-ERODIBLE AND NON-POLLUTING MATERIAL MAY BE PLACED UNDER THE BAG TO REDUCE SLOPE STEEPNESS.
4. NO DOWNSLOPE SEDIMENT BARRIER IS REQUIRED FOR MOST INSTALLATIONS. COMPOST BERM OR COMPOST FILTER SOCK SHALL BE INSTALLED BELOW BAGS LOCATED IN HQ OR EV WATERSHEDS, WITHIN 50 FEET OF ANY RECEIVING SURFACE WATER OR WHERE GRASSY AREA IS NOT AVAILABLE.
5. THE PUMP DISCHARGE HOSE SHALL BE INSERTED INTO THE BAGS IN THE MANNER SPECIFIED BY THE MANUFACTURER AND SECURELY CLAMPED. A PIECE OF PVC PIPE IS RECOMMENDED FOR THIS PURPOSE.
6. THE PUMPING RATE SHALL BE NO GREATER THAN 750 GPM OR 1/2 THE MAXIMUM SPECIFIED BY THE MANUFACTURER, WHICHEVER IS LESS. PUMP INTAKES SHALL BE FLOATING AND SCREENED.
7. FILTER BAGS SHALL BE INSPECTED DAILY. IF ANY PROBLEM IS DETECTED, PUMPING SHALL CEASE IMMEDIATELY AND NOT RESUME UNTIL THE PROBLEM IS CORRECTED.

STANDARD CONSTRUCTION DETAIL #3-16
PUMPED WATER FILTER BAG

NOT TO SCALE

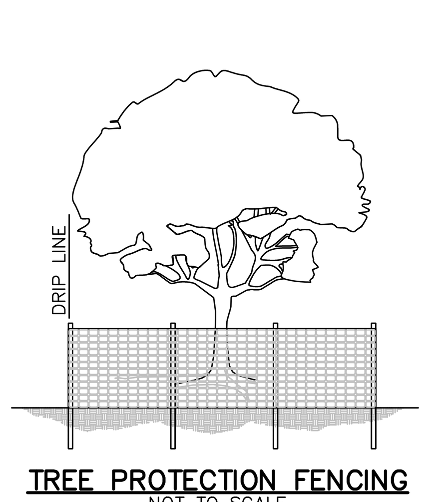

TREE PROTECTION FENCING

NOT TO SCALE

TREE PROTECTION NOTES:
1. THOSE TREES WHICH HAVE BEEN DELINEATED ON THE PLAN AND ARE WITHIN 25 FEET OF A PROPOSED BUILDING EXCAVATION OR OTHER LOCATIONS DEEMED APPROPRIATE BY THE TOWNSHIP ENGINEER SHALL BE PROTECTED BY INSTALLING AND MAINTAINING A FENCE AT THE DRIP LINE.
2. NO BOARDS OR OTHER MATERIAL SHALL BE NAILED TO TREES DURING CONSTRUCTION.
3. THE OPERATION OF HEAVY EQUIPMENT OVER ROOT SYSTEMS OF SUCH TREES SHALL BE MINIMIZED IN ORDER TO PREVENT SOIL COMPACTION.
4. DAMAGED TREES SHALL BE FERTILIZED TO AID IN THEIR RECOVERY.
5. ALL WOODY VEGETATION TO BE RETAINED WITHIN 25 FEET OF A BUILDING SITE, PARKING AREA, OR OTHER PROPOSED IMPROVEMENT SHALL BE PROTECTED FROM EQUIPMENT DAMAGE BY SNOW FENCING OR OTHER EFFECTIVE BARRIERS.
6. HEAVY EQUIPMENT OPERATORS SHALL MINIMIZE DAMAGE TO EXISTING TREE TRUNKS AND ROOT SYSTEMS BY NOT DRIVING HEAVY EQUIPMENT WITHIN THE AREA CIRCUMSCRIBED BY THE DRIP LINE OF ANY TREE. IN ADDITION, ROOTS SHALL NOT BE CUT OR DISTURBED WITHIN THE AREA CIRCUMSCRIBED BY THE DRIPLINE OF ANY TREE.
7. TREE TRUNKS AND EXPOSED ROOTS DAMAGED DURING CONSTRUCTION SHALL BE PROTECTED FROM FURTHER DAMAGE BY FENCING OR OTHER STRUCTURAL BARRIER. TREATMENT OF DAMAGED AREAS SHALL BE DICTATED BY THE NATURE OF THE INJURY, E.G., DAMAGED BARK SHALL BE CUT BACK TO A POINT WHERE THE BARK IS INTACT AND TIGHT TO THE TREE, EXPOSED ROOTS SHALL BE CLEANED UP AND COVERED WITH TOPSOIL.
8. TREES SHALL NOT BE USED FOR ROPING, CABLES, SIGNS, OR FENCING. NAILS AND SPIKES SHALL NOT BE DRIVEN INTO TREES.
9. THE AREA AROUND THE BASE OF EXISTING WOODY VEGETATION SHALL BE LEFT OPEN. NO IMPERVIOUS COVER, STORAGE OF EQUIPMENT, MATERIALS, DEBRIS, OR FILL SHALL BE ALLOWED WITHIN THE DRIPLINE OF ANY EXISTING TREE. GRADE CHANGES TO OCCUR AT ANY LOCATION ON THE PROPERTY SHALL NOT RESULT IN AN ALTERATION TO SOIL OR DRAINAGE CONDITIONS WHICH WOULD ADVERSELY AFFECT EXISTING VEGETATION TO BE RETAINED FOLLOWING SITE DISTURBANCE, UNLESS ADEQUATE PROVISIONS ARE MADE TO PROTECT SUCH VEGETATION AND ITS ROOT SYSTEMS. WHERE EXISTING GROUND LEVELS ARE CHANGED, DRAINAGE TILE WILL BE PLACED AT THE OLD SOIL LEVEL AND OPEN INTO A WELL BUILT AROUND THE BASE OF THE TREE. SUCH WELL MAY BE LEFT OPEN OR CAN BE FILLED WITH COARSE STONES OR GRAVEL. TILES MAY BE INSTALLED IN A RADIATING PATTERN OR LAID IN PARALLEL LINES.

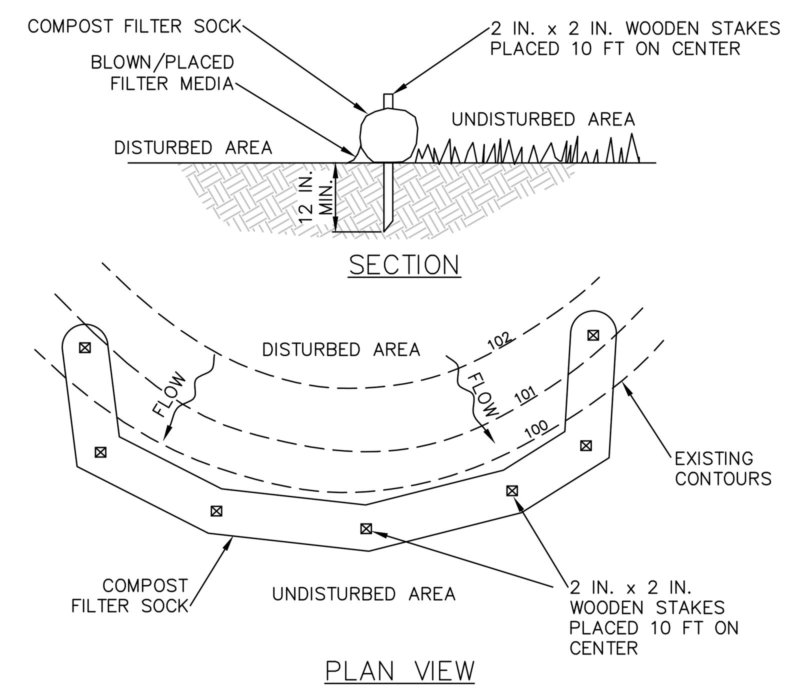

NOTES:
1. SOCK FABRIC SHALL MEET STANDARDS OF TABLE 4.1 OF THE PA DEP EROSION CONTROL MANUAL. COMPOST SHALL MEET THE STANDARDS OF TABLE 4.2 OF THE PA DEP EROSION CONTROL MANUAL.
2. COMPOST FILTER SOCK SHALL BE PLACED AT EXISTING LEVEL GRADE. BOTH ENDS OF THE BARRIER SHALL BE EXTENDED AT LEAST 8 FEET UP SLOPE AT 45 DEGREES TO THE MAIN BARRIER ALIGNMENT. MAXIMUM SLOPE LENGTH ABOVE ANY BARRIER SHALL NOT EXCEED THAT SPECIFIED FOR THE SIZE OF THE SOCK AND THE SLOPE OF ITS TRIBUTARY AREA.
3. TRAFFIC SHALL NOT BE PERMITTED TO CROSS COMPOST FILTER SOCKS.
4. ACCUMULATED SEDIMENT SHALL BE REMOVED WHEN IT REACHES 1/2 THE ABOVE GROUND HEIGHT OF THE BARRIER AND DISPOSED IN THE MANNER DESCRIBED ELSEWHERE IN THE PLAN.
5. COMPOST FILTER SOCKS SHALL BE INSPECTED WEEKLY AND AFTER EACH RUNOFF EVENT. DAMAGED SOCKS SHALL BE REPAIRED ACCORDING TO MANUFACTURER'S SPECIFICATIONS OR REPLACED WITHIN 24 HOURS OF INSPECTION.
6. BIODEGRADABLE COMPOST FILTER SOCKS SHALL BE REPLACED AFTER 6 MONTHS; PHOTODEGRADABLE SOCKS AFTER 1 YEAR. POLYPROPYLENE SOCKS SHALL BE REPLACED ACCORDING TO MANUFACTURER'S RECOMMENDATIONS.
7. UPON STABILIZATION OF THE AREA TRIBUTARY TO THE SOCK, STAKES SHALL BE REMOVED. THE SOCK MAY BE LEFT IN PLACE AND VEGETATED OR REMOVED. IN THE LATTER CASE, THE MESH SHALL BE CUT OPEN AND THE MULCH SPREAD AS A SOIL SUPPLEMENT.

#	LENGTH	SLOPE	SIZE
1	60	13.0	8"
2	65	12.0	8"
3	185	12.0	18"
4	205	12.0	18"
5	275	12.0	24"

STANDARD CONSTRUCTION DETAIL #4-1
COMPOST FILTER SOCK

NOT TO SCALE

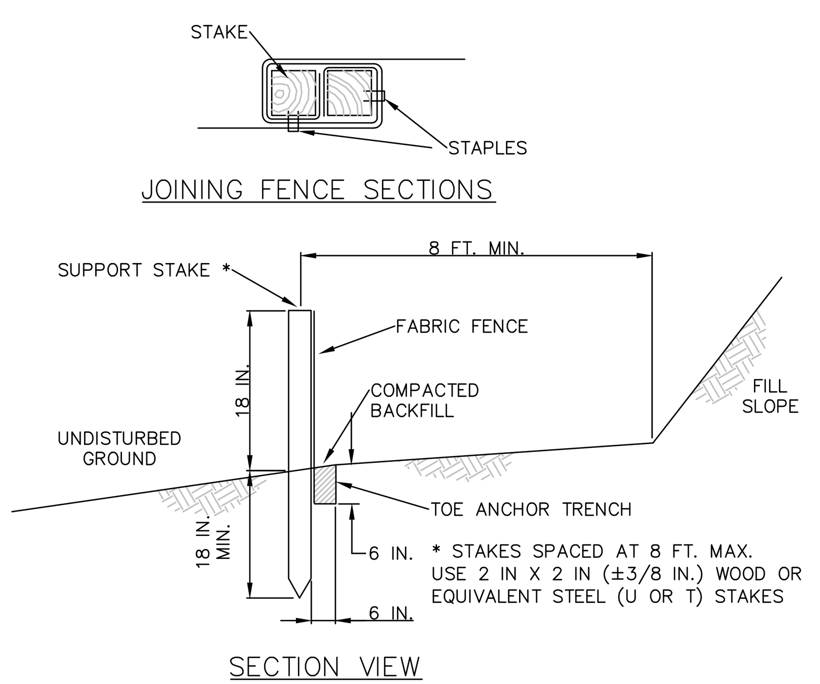

NOTES:
1. FABRIC SHALL HAVE THE MINIMUM PROPERTIES AS SHOWN IN TABLE 4.3 OF THE PA DEP EROSION CONTROL MANUAL.
2. FABRIC WIDTH SHALL BE 30 IN. MINIMUM. STAKES SHALL BE HARDWOOD OR EQUIVALENT STEEL (U OR T) STAKES.
3. SILT FENCE SHALL BE PLACED AT LEVEL EXISTING GRADE. BOTH ENDS OF THE FENCE SHALL BE EXTENDED AT LEAST 8 FEET UP SLOPE AT 45 DEGREES TO THE MAIN FENCE ALIGNMENT.
4. SEDIMENT SHALL BE REMOVED WHEN ACCUMULATIONS REACH HALF THE ABOVE GROUND HEIGHT OF THE FENCE.
5. ANY SECTION OF SILT FENCE WHICH HAS BEEN UNDERMINED OR TOPPED SHALL BE IMMEDIATELY REPLACED WITH A ROCK FILTER OUTLET (STANDARD CONSTRUCTION DETAIL # 4-6).
6. FENCE SHALL BE REMOVED AND PROPERLY DISPOSED OF WHEN TRIBUTARY AREA IS PERMANENTLY STABILIZED.

STANDARD CONSTRUCTION DETAIL #4-7
STANDARD SILT FENCE (18" HIGH)

NOT TO SCALE

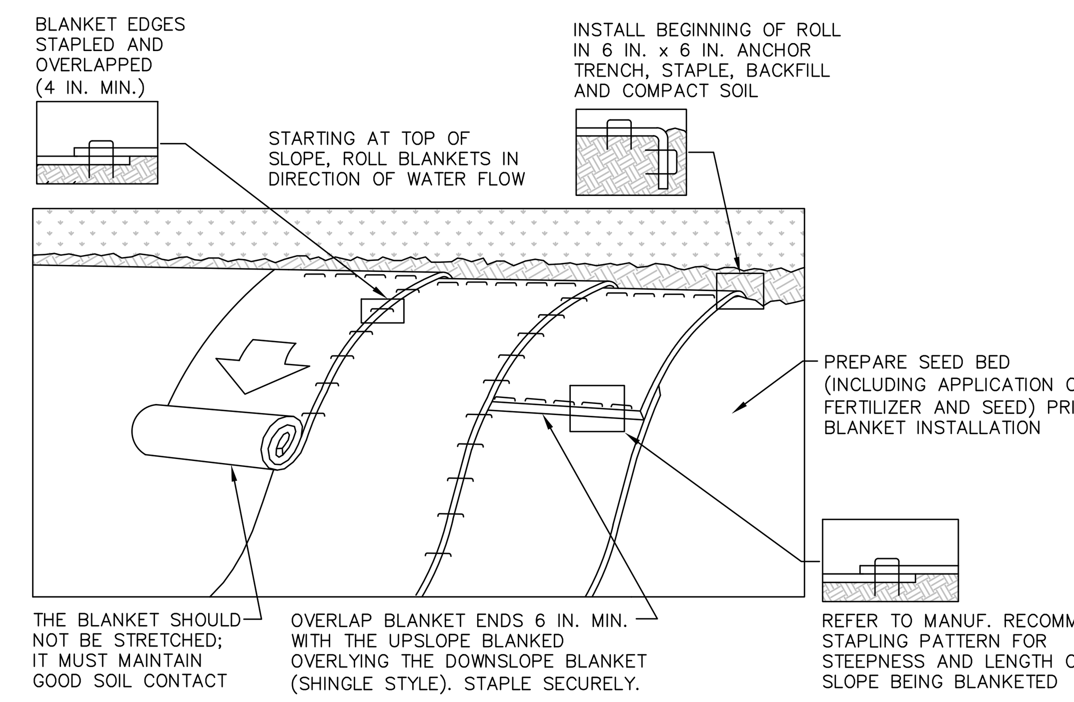

NOTES:
1. SEED AND SOIL AMENDMENTS SHALL BE APPLIED ACCORDING TO THE RATES IN THE PLAN DRAWINGS PRIOR TO INSTALLING THE BLANKET.
2. PROVIDE ANCHOR TRENCH AT TOE OF SLOPE IN SIMILAR FASHION AS AT TOP OF SLOPE.
3. SLOPE SURFACE SHALL BE FREE OF ROCKS, CLODS, STICKS, AND GRASS.
4. BLANKET SHALL HAVE GOOD CONTINUOUS CONTACT WITH UNDERLYING SOIL THROUGHOUT ENTIRE LENGTH. LAY BLANKET LOOSELY AND STAKE OR STAPLE TO MAINTAIN DIRECT CONTACT WITH SOIL. DO NOT STRETCH BLANKET.
5. THE BLANKET SHALL BE STAPLED IN ACCORDANCE WITH THE MANUFACTURER'S RECOMMENDATIONS.
6. BLANKETED AREAS SHALL BE INSPECTED WEEKLY AND AFTER EACH RUNOFF EVENT UNTIL PERENNIAL VEGETATION IS ESTABLISHED TO A MINIMUM UNIFORM 70% COVERAGE THROUGHOUT THE BLANKETED AREA. DAMAGED OR DISPLACED BLANKETS SHALL BE RESTORED OR REPLACED WITHIN 4 CALENDAR DAYS.

STANDARD CONSTRUCTION DETAIL #11-1
EROSION CONTROL BLANKET INSTALLATION

NOT TO SCALE

CLEAN FILL AND ENVIRONMENTAL DUE DILIGENCE NOTES:
1. IF THE SITE WILL HAVE EXCESS FILL THAT WILL NEED TO BE EXPORTED TO AN OFF SITE LOCATION, THE RESPONSIBILITY OF CLEAN FILL DETERMINATION AND ENVIRONMENTAL DUE DILIGENCE RESTS ON THE APPLICANT. IF ALL CUT AND FILL MATERIALS WILL BE USED ON THE SITE, A CLEAN FILL DETERMINATION IS NOT REQUIRED BY THE OPERATOR UNLESS THERE IS A BELIEF THAT A SPILL OR RELEASE OF REGULATED SUBSTANCE OCCURRED ON SITE.
2. APPLICANTS AND/OR OPERATORS MUST USE ENVIRONMENTAL DUE DILIGENCE TO ENSURE THAT THE FILL MATERIAL ASSOCIATED WITH THE PROJECT QUALIFIES AS CLEAN FILL. ALL FILL MATERIAL MUST BE USED IN ACCORDANCE WITH THE DEPARTMENT'S POLICY "MANAGEMENT OF FILL," DOCUMENT NUMBER 258-2182-773 A COPY OF THIS POLICY IS AVAILABLE ONLINE AS WWW. DEPWEB.STATE.PA.US
3. CLEAN FILL IS DEFINED AS: UNCONTAMINATED, NON-WATER SOLUBLE, NON-DECOMPOSABLE, INERT, SOLID MATERIAL. THE TERM INCLUDES SOIL, ROCK, STONE, DREDGED MATERIAL, USED ASPHALT, AND BRICK, BLOCK OR CONCRETE FROM CONSTRUCTION AND DEMOLITION ACTIVITIES THAT IS SEPARATE FROM OTHER WASTE AND IS RECOGNIZABLE AS SUCH. THE TERM DOES NOT INCLUDE MATERIALS PLACED IN OR ON THE WATERS OF THE COMMONWEALTH UNLESS OTHERWISE AUTHORIZED. (THE TERM "USED ASPHALT" DOES NOT INCLUDE MILLED ASPHALT OR ASPHALT THAT HAS BEEN PROCESSED FOR RE-USE).
4. CLEAN FILL AFFECTED BY A SPILL OR RELEASE OF A REGULATED SUBSTANCE: FILL MATERIALS AFFECTED BY A SPILL OR RELEASE OF A REGULATED SUBSTANCE STILL QUALIFIES AS CLEAN FILL PROVIDED THE TESTING REVEALS THAT THE FILL MATERIAL CONTAINS CONCENTRATIONS OF REGULATED SUBSTANCES THAT ARE BELOW THE RESIDENTIAL LIMITS IN TABLES FP-1A AND FP-1B FOUND IN THE DEPARTMENT'S POLICY "MANAGEMENT OF FILL".
5. ANY PERSON PLACING CLEAN FILL THAT HAS BEEN AFFECTED BY A SPILL OR RELEASE OF A REGULATED SUBSTANCE MUST USE FORM FP-001 TO CERTIFY THE ORIGIN OF THE FILL MATERIAL AND THE RESULTS OF THE ANALYTICAL TESTING TO QUALIFY THE MATERIAL AS CLEAN FILL. FORM FP-OD1 MUST BE RETAINED BY THE OWNER OF THE PROPERTY RECEIVING THE FILL. A COPY OF FORM FP-001 CAN BE FOUND AT THE END OF THESE INSTRUCTIONS.
6. ENVIRONMENTAL DUE DILIGENCE: INVESTIGATIVE TECHNIQUES, INCLUDING, BUT NOT LIMITED TO, VISUAL PROPERTY INSPECTIONS, ELECTRONIC DATA BASE SEARCHES, REVIEW OF PROPERTY OWNERSHIP, REVIEW OF PROPERTY USE HISTORY, SANBORN MAPS, ENVIRONMENTAL QUESTIONNAIRES, TRANSACTION SCREENS, ANALYTICAL TESTING, ENVIRONMENTAL ASSESSMENTS OR AUDITS. ANALYTICAL TESTING IS NOT A REQUIRED PART OF DUE DILIGENCE UNLESS VISUAL INSPECTION AND/OR REVIEW OF THE PAST LAND USE OF THE PROPERTY INDICATES THAT THE FILL MAY HAVE BEEN SUBJECTED TO A SPILL OR RELEASE OF REGULATED SUBSTANCE. IF THE FILL MAY HAVE BEEN AFFECTED BY A SPILL OR RELEASE OF A REGULATED SUBSTANCE, IT MUST BE TESTED TO DETERMINE IF IT QUALIFIES AS CLEAN FILL. TESTING SHOULD BE PERFORMED IN ACCORDANCE WITH APPENDIX A OF THE DEPARTMENT'S POLICY "MANAGEMENT OF FILL".
7. FILL MATERIAL THAT DOES NOT QUALIFY AS CLEAN FILL IS REGULATED FILL. REGULATED FILL IS WASTE AND MUST BE MANAGED IN ACCORDANCE WITH THE DEPARTMENT'S MUNICIPAL OR RESIDUAL WASTE REGULATIONS BASED ON 25 PA. CODE CHAPTERS 287 RESIDUAL WASTE MANAGEMENT OR 271 MUNICIPAL WASTE MANAGEMENT. WHICHEVER IS APPLICABLE.

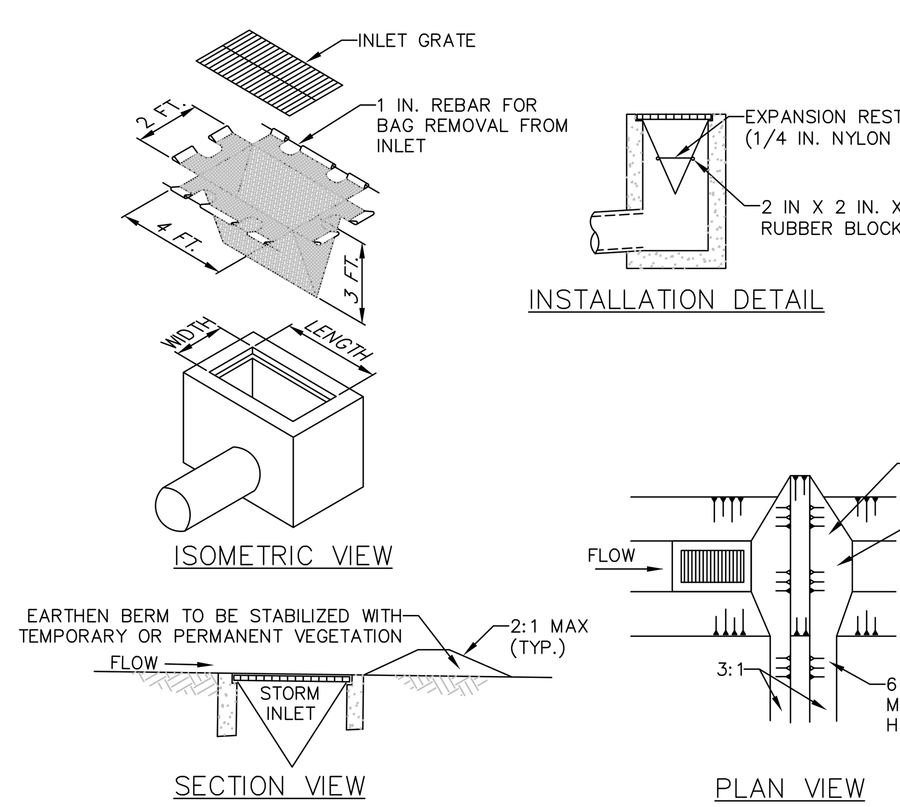

NOTES:
1. MAXIMUM DRAINAGE AREA = 1/2 ACRE.
2. INLET PROTECTION SHALL NOT BE REQUIRED FOR INLET TRIBUTARY TO SEDIMENT BASIN OR TRAP. BERMS SHALL BE REQUIRED FOR ALL INSTALLATIONS.
3. ROLLED EARTHEN BERM IN ROADWAY SHALL BE MAINTAINED UNTIL ROADWAY IS STONED. ROAD SUBBASE BERM ON ROADWAY SHALL BE MAINTAINED UNTIL ROADWAY IS PAVED. EARTHEN BERM IN CHANNEL SHALL BE MAINTAINED UNTIL PERMANENT STABILIZATION IS COMPLETED OR REMAIN PERMANENTLY.
4. AT A MINIMUM, THE FABRIC SHALL HAVE A MINIMUM GRAB TENSILE STRENGTH OF 120 LBS., A MINIMUM BURST STRENGTH OF 200 PSI, AND A MINIMUM TRAPEZOIDAL TEAR STRENGTH OF 50 LBS. FILTER BAGS SHALL BE CAPABLE OF TRAPPING ALL PARTICLES NOT PASSING A NO. 40 SIEVE.
5. INLET FILTER BAGS SHALL BE INSPECTED ON A WEEKLY BASIS AND AFTER EACH RUNOFF EVENT. BAGS SHALL BE EMPTIED AND RINSED OR REPLACED WHEN HALF FULL OR WHEN FLOW CAPACITY HAS BEEN REDUCED SO AS TO CAUSE FLOODING OR BYPASSING OF THE INLET. DAMAGED OR CLOGGED BAGS SHALL BE REPLACED. A SUPPLY SHALL BE MAINTAINED ON SITE FOR REPLACEMENT OF BAGS. ALL NEEDED REPAIRS SHALL BE INITIATED IMMEDIATELY AFTER THE INSPECTION. DISPOSE ACCUMULATED SEDIMENT AS WELL AS ALL USED BAGS ACCORDING TO THE PLAN NOTES.
6. DO NOT USE ON MAJOR PAVED ROADWAYS WHERE PONDING MAY CAUSE TRAFFIC HAZARDS.

STANDARD CONSTRUCTION DETAIL #4-16
FILTER BAG INLET PROTECTION - TYPE M INLET

NOT TO SCALE

STANDARD E&S PLAN NOTES:
1. ALL EARTH DISTURBANCES, INCLUDING CLEARING AND GRUBBING AS WELL AS CUTS AND FILLS SHALL BE DONE IN ACCORDANCE WITH THE APPROVED E&S PLAN. A COPY OF THE APPROVED DRAWINGS (STAMPED, SIGNED AND DATED BY THE REVIEWING AGENCY) MUST BE AVAILABLE AT THE PROJECT SITE AT ALL TIMES. THE REVIEWING AGENCY SHALL BE NOTIFIED OF ANY CHANGES TO THE APPROVED PLAN PRIOR TO IMPLEMENTATION OF THOSE CHANGES. THE REVIEWING AGENCY MAY REQUIRE A WRITTEN SUBMITTAL OF THOSE CHANGES FOR REVIEW AND APPROVAL AT ITS DISCRETION.
2. AT LEAST 3 DAYS PRIOR TO STARTING ANY EARTH DISTURBANCE ACTIVITIES, OR EXPANDING INTO AN AREA PREVIOUSLY UNMARKED, THE PENNSYLVANIA ONE CALL SYSTEM INC. SHALL BE NOTIFIED AT 1-800-242-1776 FOR THE LOCATION OF EXISTING UNDERGROUND UTILITIES.
3. ALL EARTH DISTURBANCE ACTIVITIES SHALL PROCEED IN ACCORDANCE WITH THE SEQUENCE PROVIDED ON THE PLAN DRAWINGS. DEVIATION FROM THAT SEQUENCE MUST BE APPROVED IN WRITING FROM THE MUNICIPALITY PRIOR TO IMPLEMENTATION.
4. AREAS TO BE FILLED ARE TO BE CLEARED, GRUBBED, AND STRIPPED OF TOPSOIL TO REMOVE TREES, VEGETATION, ROOTS AND OTHER OBJECTIONABLE MATERIAL.
5. CLEARING, GRUBBING, AND TOPSOIL STRIPPING SHALL BE LIMITED TO THOSE AREAS DESCRIBED IN EACH STAGE OF THE CONSTRUCTION SEQUENCE. GENERAL SITE CLEARING, GRUBBING AND TOPSOIL STRIPPING MAY NOT COMMENCE IN ANY STAGE OR PHASE OF THE PROJECT UNTIL THE E&S BMPS SPECIFIED BY THE BMP SEQUENCE FOR THAT STAGE OR PHASE HAVE BEEN INSTALLED AND ARE FUNCTIONING AS DESCRIBED IN THIS E&S PLAN.
6. AT NO TIME SHALL CONSTRUCTION VEHICLES BE ALLOWED TO ENTER AREAS OUTSIDE THE LIMIT OF DISTURBANCE BOUNDARIES SHOWN ON THE PLAN MAPS. THESE AREAS MUST BE CLEARLY MARKED AND FENCED OFF BEFORE CLEARING AND GRUBBING OPERATIONS BEGIN.
7. TOPSOIL REQUIRED FOR THE ESTABLISHMENT OF VEGETATION SHALL BE STOCKPILED AT THE LOCATION(S) SHOWN ON THE PLAN MAPS(S) IN THE AMOUNT NECESSARY TO COMPLETE THE FINISH GRADING OF ALL EXPOSED AREAS THAT ARE TO BE STABILIZED BY VEGETATION. EACH STOCKPILE SHALL BE PROTECTED IN THE MANNER SHOWN ON THE PLAN DRAWINGS. STOCKPILE HEIGHTS SHALL NOT EXCEED 15 FEET. STOCKPILE SLOPES SHALL BE 2H:1V OR FLATTER.
8. IMMEDIATELY UPON DISCOVERING UNFORESEEN CIRCUMSTANCES POSING THE POTENTIAL FOR ACCELERATED EROSION AND/OR SEDIMENT POLLUTION, THE OPERATOR SHALL IMPLEMENT APPROPRIATE BEST MANAGEMENT PRACTICES TO MINIMIZE THE POTENTIAL FOR EROSION AND SEDIMENT POLLUTION AND NOTIFY THE MUNICIPALITY.
9. ALL BUILDING MATERIALS AND WASTES SHALL BE REMOVED FROM THE SITE AND RECYCLED OR DISPOSED OF IN ACCORDANCE WITH THE DEPARTMENT'S SOLID WASTE MANAGEMENT REGULATIONS AT 25 PA. CODE 260.1 ET SEQ., 271.1, AND 287.1 ET. SEQ. NO BUILDING MATERIALS OR WASTES OR UNUSED BUILDING MATERIALS SHALL BE BURNED, BURIED, DUMPED, OR DISCHARGED AT THE SITE.
10. ALL OFF-SITE WASTE AND BORROW AREAS MUST HAVE AN E&S PLAN APPROVED BY THE LOCAL CONSERVATION DISTRICT OR THE DEPARTMENT FULLY IMPLEMENTED PRIOR TO BEING ACTIVATED.
11. THE CONTRACTOR IS RESPONSIBLE FOR ENSURING THAT ANY MATERIAL BROUGHT ON SITE IS CLEAN FILL. FORM FP-001 MUST BE RETAINED BY THE PROPERTY OWNER FOR ANY FILL MATERIAL AFFECTED BY A SPILL OR RELEASE OF A REGULATED SUBSTANCE BUT QUALIFYING AS CLEAN FILL DUE TO ANALYTICAL TESTING.
12. ALL PUMPING OF WATER FROM ANY WORK AREA SHALL BE DONE ACCORDING TO THE PROCEDURE DESCRIBED IN THIS PLAN, OVER UNDISTURBED VEGETATED AREAS.
13. UNTIL THE SITE IS STABILIZED, ALL EROSION AND SEDIMENT BMPS SHALL BE MAINTAINED PROPERLY. MAINTENANCE SHALL INCLUDE INSPECTIONS OF ALL EROSION AND SEDIMENT BMPS AFTER EACH RUNOFF EVENT AND ON A WEEKLY BASIS. ALL PREVENTATIVE AND REMEDIAL MAINTENANCE WORK, INCLUDING CLEAN OUT, REPAIR, REPLACEMENT, REGRADING, RESEEDING, REMULCHING AND RENETTING MUST BE PERFORMED IMMEDIATELY. IF THE E&S BMPS FAIL TO PERFORM AS EXPECTED, REPLACEMENT BMPS, OR MODIFICATIONS OF THOSE INSTALLED WILL BE REQUIRED.
14. DEP FORM 3150-FM-BWEW0083 SHALL BE USED AND KEPT ON SITE AT ALL TIMES SHOWING DATES THAT E&S BMPS WERE INSPECTED AS WELL AS ANY DEFICIENCIES FOUND AND THE DATE THEY WERE CORRECTED AND BE MADE AVAILABLE TO REGULATORY AGENCY OFFICIALS AT THE TIME OF INSPECTION.
15. SEDIMENT TRACKED ONTO ANY PUBLIC ROADWAY OR SIDEWALK SHALL BE RETURNED TO THE CONSTRUCTION SITE BY THE END OF EACH WORK DAY AND DISPOSED IN THE MANNER DESCRIBED IN THIS PLAN. IN NO CASE SHALL THE SEDIMENT BE WASHED, SHOVELED, OR SWEPT INTO ANY ROADSIDE DITCH, STORM SEWER, OR SURFACE WATER.
16. ALL SEDIMENT REMOVED FROM BMPS SHALL BE DISPOSED OF IN THE MANNER DESCRIBED ON THE PLAN DRAWINGS.
17. AREAS WHICH ARE TO BE TOPSOILED SHALL BE SCARIFIED TO A MINIMUM DEPTH OF 3 TO 5 INCHES - 6 TO 12 INCHES ON COMPACTED SOILS - PRIOR TO PLACEMENT OF TOPSOIL. AREAS TO BE VEGETATED SHALL HAVE A MINIMUM 6 INCHES OF TOPSOIL IN PLACE PRIOR TO SEEDING AND MULCHING.
18. ALL FILLS SHALL BE COMPACTED AS REQUIRED TO REDUCE EROSION, SLIPPAGE, SETTLEMENT, SUBSIDENCE OR OTHER RELATED PROBLEMS. FILL INTENDED TO SUPPORT BUILDINGS, STRUCTURES AND CONDUITS, ETC. SHALL BE COMPACTED IN ACCORDANCE WITH LOCAL REQUIREMENTS OR CODES.
19. ALL EARTHEN FILLS SHALL BE PLACED IN COMPACTED LAYERS NOT TO EXCEED 9 INCHES IN THICKNESS.
20. FILL MATERIALS SHALL BE FREE OF FROZEN PARTICLES, BRUSH, ROOTS, SOD, OR OTHER FOREIGN OR OBJECTIONABLE MATERIALS THAT WOULD INTERFERE WITH OR PREVENT CONSTRUCTION OF SATISFACTORY FILLS.
21. FROZEN MATERIALS OR SOFT, MUCKY, OR HIGHLY COMPRESSIBLE MATERIALS SHALL NOT BE INCORPORATED INTO FILLS.
22. FILL SHALL NOT BE PLACED ON SATURATED OR FROZEN SURFACES.
23. SEEPS OR SPRINGS ENCOUNTERED DURING CONSTRUCTION SHALL BE HANDLED IN ACCORDANCE WITH THE STANDARD AND SPECIFICATION FOR SUBSURFACE DRAIN OR OTHER APPROVED METHOD.
24. ALL GRADED AREAS SHALL BE PERMANENTLY STABILIZED IMMEDIATELY UPON REACHING FINISHED GRADE. CUT SLOPES IN COMPETENT BEDROCK AND ROCK FILLS NEED NOT BE VEGETATED. SEEDED AREAS WITHIN 50 FEET OF A SURFACE WATER, OR AS OTHERWISE SHOWN ON THE PLAN DRAWINGS, SHALL BE BLANKETED ACCORDING TO THE STANDARDS OF THIS PLAN.
25. IMMEDIATELY AFTER EARTH DISTURBANCE ACTIVITIES CEASE IN ANY AREA OR SUBAREA OF THE PROJECT, THE OPERATOR SHALL STABILIZE ALL DISTURBED AREAS. DURING NON-GERMINATING MONTHS, MULCH OR PROTECTIVE BLANKETING SHALL BE APPLIED AS DESCRIBED IN THE PLAN. AREAS NOT AT FINISHED GRADE, WHICH WILL BE REACTIVATED WITHIN 1 YEAR, MAY BE STABILIZED IN ACCORDANCE WITH THE TEMPORARY STABILIZATION SPECIFICATIONS. THOSE AREAS WHICH WILL NOT BE REACTIVATED WITHIN 1 YEAR SHALL BE STABILIZED IN ACCORDANCE WITH THE PERMANENT STABILIZATION SPECIFICATIONS.
26. PERMANENT STABILIZATION IS DEFINED AS A MINIMUM UNIFORM, PERENNIAL 70% VEGETATIVE COVER OR OTHER PERMANENT NON-VEGETATIVE COVER WITH A DENSITY SUFFICIENT TO RESIST ACCELERATED EROSION. CUT AND FILL SLOPES SHALL BE CAPABLE OF RESISTING FAILURE DUE TO SLUMPING, SLIDING, OR OTHER MOVEMENTS.
27. E&S BMPS SHALL REMAIN FUNCTIONAL AS SUCH UNTIL ALL AREAS TRIBUTARY TO THEM ARE PERMANENTLY STABILIZED OR UNTIL THEY ARE REPLACED BY ANOTHER BMP APPROVED BY THE MUNICIPALITY.
28. UPON COMPLETION OF ALL EARTH DISTURBANCE ACTIVITIES AND PERMANENT STABILIZATION OF ALL DISTURBED AREAS, THE OWNER AND/OR OPERATOR SHALL CONTACT THE MUNICIPALITY FOR AN INSPECTION PRIOR TO REMOVAL/CONVERSION OF THE E&S BMPS.
29. AFTER FINAL SITE STABILIZATION HAS BEEN ACHIEVED, TEMPORARY EROSION AND SEDIMENT BMPS MUST BE REMOVED OR CONVERTED TO PERMANENT POST CONSTRUCTION STORMWATER MANAGEMENT BMPS. AREAS DISTURBED DURING REMOVAL OR CONVERSION OF THE BMPS SHALL BE STABILIZED IMMEDIATELY. IN ORDER TO ENSURE RAPID REVEGETATION OF DISTURBED AREAS, SUCH REMOVAL/CONVERSIONS ARE TO BE DONE ONLY DURING THE GERMINATING SEASON.
30. UPON COMPLETION OF ALL EARTH DISTURBANCE ACTIVITIES AND PERMANENT STABILIZATION OF ALL DISTURBED AREAS, THE OWNER AND/OR OPERATOR SHALL CONTACT THE MUNICIPALITY TO SCHEDULE A FINAL INSPECTION.
31. FAILURE TO CORRECTLY INSTALL E&S BMPS, FAILURE TO PREVENT SEDIMENT-LADEN RUNOFF FROM LEAVING THE CONSTRUCTION SITE, OR FAILURE TO TAKE IMMEDIATE CORRECTIVE ACTION TO RESOLVE FAILURE OF E&S BMPS MAY RESULT IN ADMINISTRATIVE, CIVIL, AND/OR CRIMINAL PENALTIES BEING INSTITUTED BY THE DEPARTMENT AS DEFINED IN SECTION 602 OF THE PENNSYLVANIA CLEAN STREAMS LAW. THE CLEAN STREAMS LAW PROVIDES FOR UP TO $10,000 PER DAY IN CIVIL PENALTIES, UP TO $10,000 IN SUMMARY CRIMINAL PENALTIES, AND UP TO $25,000 IN MISDEMEANOR CRIMINAL PENALTIES FOR EACH VIOLATION.
32. CONCRETE WASH WATER SHALL BE HANDLED IN THE MANNER DESCRIBED ON THE PLAN DRAWINGS. IN NO CASE SHALL IT BE ALLOWED TO ENTER ANY SURFACE WATERS OR GROUNDWATER SYSTEMS.
33. SOD OR EROSION CONTROL BLANKETING SHALL BE INSTALLED ON ALL SLOPES 3H:1V OR STEEPER, WITHIN 50 FEET OF A SURFACE WATER AND ON ALL OTHER DISTURBED AREAS SPECIFIED ON THE PLAN MAPS AND/OR DETAIL SHEETS.
34. HAY OR STRAW MULCH MUST BE APPLIED AT 3.0 TONS PER ACRE.
35. STRAW MULCH SHALL BE APPLIED IN LONG STRANDS, NOT CHOPPED OR FINELY BROKEN.
36. GRADING AND EARTHMOVING OPERATIONS SHALL BE MINIMIZED DURING THE PERIOD FROM NOVEMBER 15 TO APRIL 1 WHEN RE-VEGETATION OF EXPOSED GROUND SURFACE IS DIFFICULT. MULCH, STRAW, STONE AND/OR SOD SHALL BE USED TO STABILIZE ALL AREAS DENUDED DURING THIS TIME PERIOD.
37. THE RUNOFF CROSSING TO THE ADJACENT PROPERTIES DURING THE CONSTRUCTION PHASE OF THE PROJECT SHALL BE MANAGED SO THAT THE WATER QUALITY / QUANTITY IMPACT IS MINIMIZED TO THE ADJACENT PROPERTIES. ADDITIONAL DIVERSION BERMS, STONED CONSTRUCTION STAGING AREAS, AND INLETS/PIPING SHALL BE PROVIDED AS NECESSARY / DIRECTED IN ORDER TO ENSURE ACCEPTABLE CONDITIONS DURING THE CONSTRUCTION PHASE.
38. ALL TOPSOIL SHALL REMAIN ONSITE UNLESS OTHERWISE DIRECTED BY THE OWNER.

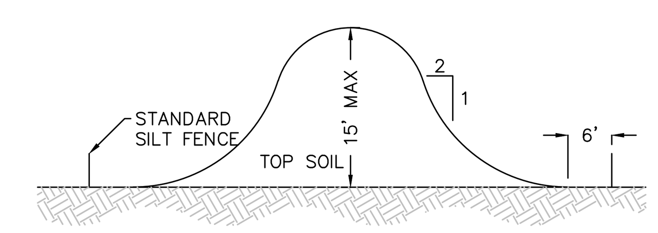

NOTES:
1. SILT FENCE MUST COMPLETELY ENCIRCLE STOCKPILES
2. TOPSOIL SHALL NOT BE REMOVED FROM THE DEVELOPMENT SITE OR USED AS FILL.
3. TOPSOIL SHALL BE REMOVED FROM THE AREAS OF CONSTRUCTION AND STORED SEPARATELY.
4. TOPSOIL SHALL BE STABILIZED TO MINIMIZE EROSION DURING STORAGE.
5. UPON COMPLETION OF CONSTRUCTION, THE TOPSOIL SHALL BE UNIFORMLY REDISTRIBUTED ON THE SITE.

TYPICAL SOIL STOCKPILE CROSS SECTION

NOT TO SCALE

TOPSOIL APPLICATION:
1. GRADED AREAS SHOULD BE SCARIFIED OR OTHERWISE LOOSENED TO A DEPTH OF 3 TO 5 INCHES TO PERMIT BONDING OF THE TOPSOIL TO THE SURFACE AREAS AND TO PROVIDE A ROUGHENED SURFACE TO PREVENT TOPSOIL FROM SLIDING DOWN SLOPE.
2. TOPSOIL SHOULD BE UNIFORMLY DISTRIBUTED ACROSS THE DISTURBED AREA TO A DEPTH OF 4 TO 8 INCHES MINIMUM - 2 INCHES ON FILL OUTSLOPES. SPREADING SHOULD BE DONE IN SUCH A MANNER THAT SODDING OR SEEDING CAN PROCEED WITH A MINIMUM OF ADDITIONAL PREPARATION OR TILLAGE. IRREGULARITIES IN THE SURFACE RESULTING FROM TOPSOIL PLACEMENT SHOULD BE CORRECTED IN ORDER TO PREVENT FORMATION OF DEPRESSIONS UNLESS SUCH DEPRESSIONS ARE PART OF THE PCSM PLAN.
3. TOPSOIL SHOULD NOT BE PLACED WHILE THE TOPSOIL OR SUBSOIL IS IN A FROZEN OR MUDDY CONDITION, WHEN THE SUBSOIL IS EXCESSIVELY WET, OR IN A CONDITION THAT MAY OTHERWISE BE DETRIMENTAL TO PROPER GRADING AND SEEDBED PREPARATION. COMPACTED SOILS SHOULD BE SCARIFIED 6 TO 12 INCHES ALONG CONTOUR WHEREVER POSSIBLE PRIOR TO SEEDING.

TURFGRASS ESTABLISHMENT:
SOIL TESTING
1. A SOIL TEST TO DETERMINE LIME AND FERILIZER REQUIREMENTS PROVIDES THE BEST GUIDE FOR PROPER TURFGRASS ESTABLISHMENT.

ROUGH-GRADING
1. REMOVE ALL DEBRIS, INCLUDING LARGE STONES.
2. TILL SOIL AND BRING AREA TO ROUGH-GRADE PRIOR TO LIMING OR FERTILIZATION.
3. WHERE TOPSOIL IS TO BE REPLACED OR BROUGHT IN, FIRST ROUGH-GRADE THE AREA TO THE CONTOUR OF THE FINISHED GRADE TO FACILITATE UNIFORM DISTRIBUTION OF TOPSOIL.

LIMING
1. WHERE A TEST HAS BEEN MADE, BROADCAST AND WORK INTO A 4 TO 6-INCH SOIL DEPTH TO MEET THE REQUIREMENT SHOWN BY THE TEST.
2. WHERE LIME REQUIREMENT EXCEEDS 200 LBS. PER 1,000 SF, APPLY ONE HALF THE TOTAL REQUIREMENT, TILL, APPLY THE REMAINING ONE HALF, AND RETILL.
3. WHERE A TEST IS NOT AVAILABLE, BROADCAST AND WORK INTO A 4 TO 6-INCH SOIL DEPTH A MINIMUM OF 100 LBS. PER 1,000 SF.

BASIC FERTILIZATION
1. WHERE A TEST HAS BEEN MADE, BROADCAST THE RECOMMENDED FERTILIZER AND WORK INTO THE SOIL TO A 4 TO 6-INCH DEPTH.
2. WHERE A TEST HAS NOT BEEN MADE, BROADCAST AND WORK INTO THE SOIL TO A 4 TO 6-INCH DEPTH 25 TO 35 LBS. OF 0-46-0 FERTILIZER OR EQUIVALENT PER 1,000 SF.

SOIL AMENDMENTS
1. WHERE A TEST INDICATES THE SOIL HAS A LOW ORGANIC MATTER CONTENT, WORK THE RECOMMENDED ORGANIC MATTER INTO THE SOIL TO A 2 TO 4-INCH DEPTH BEFORE APPLYING THE STARTER FERTILIZER.
2. REED SEDGE PEAT, MOSS PEAT, OR A COMBINATION OF THE TWO MATERIALS IS RECOMMENDED AS A SOURCE OF ORGANIC MATTER.

TILLAGE
1. TILL SEEDBED TO A 4 TO 6-INCH DEPTH MAKING SURE THE LIMESTONE (IF REQUIRED), AMENDMENTS (IF REQUIRED) AND THE BASIC FERTILIZER ARE UNIFORMLY MIXED THROUGHOUT THE SOIL PROFILE. POCKETS OF LIMESTONE, AMENDMENTS OR FERTILIZER MUST BE AVOIDED.

FINISH-GRADING
1. RAKE AREA TO FINISH-GRADE PRIOR TO SEEDING. LIGHT ROLLING WILL INDICATE ANY LOW SPOTS OR OTHER IRREGULARITIES OF THE AREA.

STARTER FERTILIZATION
1. IMMEDIATELY PRIOR TO SEEDING, BROADCAST AND WORK INTO THE TOP INCH OF SOIL 40 LBS. OF A 10-5-5, 10-6-4 OR 25 LBS. OF A 16-8-8 FERTILIZER OR THE EQUIVALENT PER 1,000 SF. THE FERTILIZER MUST BE TURF GRADE, HAVING AN APPROXIMATE 2-1-1 RATIO AND CONTAINING 35 PERCENT OR MORE OF THE TOTAL NITROGEN AS WATER INSOLUBLE OR CONTROLLED RELEASE NITROGEN.

SEEDING
1. LATE SUMMER TO EARLY FALL IS THE BEST TIME FOR SEEDING PERMANENT TURFGRASS.
2. SOW RECOMMENDED SEED MIXTURE ADAPTED TO USE AND CLIMATIC CONDITIONS OF THE AREA.
3. DIVIDE TOTAL SEED QUANTITY INTO TWO EQUAL LOTS, SOWING ONE LOT IN ONE DIRECTION AND THE SECOND LOT AT RIGHT ANGLES TO THE FIRST WITH A MECHANICAL SEEDER OR SPREADER.

COVER SEED
1. RAKE LIGHTLY OR DRAG AREA TO COVER SEED NO DEEPER THAN ¼ IN.

SEED-SOIL CONTACT
1. ROLL LIGHTLY TO FIRM SOIL AROUND SEED.

MULCHING
1. MULCH SEEDED AREA WITH CLEAN STRAW OR MARSH HAY AT 3.0 TONS PER ACRE. LIGHT MULCHES (SOME SOIL SHOWING THROUGH MULCH) MAY BE LEFT ON THE AREA TO DECOMPOSE. HEAVY MULCHES (COMPLETE SOIL COVERAGE) SHOULD BE REMOVED FROM THE AREA WITHIN A FEW DAYS AFTER SEED GERMINATION.

PERMANENT SEED MIXTURES		
SPECIES	% OF MIXTURE	SEED RATE
SUNNY AREAS AND WELL-DRAINED SOILS		
KENTUCKY BLUEGRASS	100%	2-3 LB/1,000 SF
KENTUCKY BLUEGRASS PERENNIAL RYEGRASS	80-90% 10-20%	3-4 LB/1,000 SF
KENTUCKY BLUEGRASS FINE FESCUES PERENNIAL RYEGRASS	40-60% 30-40% 10-20%	3-4 LB/1,000 SF
TURF-TYPE TALL FESCUE	100%	6-8 LB/1,000 SF
TURF-TYPE PERENNIAL RYEGRASS	100%	4-5 LB/1,000 SF
PARTIALLY SHADED AREAS		
FINE FESCUES KENTUCKY BLUEGRASS PERENNIAL RYEGRASS	40-50% 40-50% 10-20%	4 LB/1,000 SF
FINE FESCUES	100%	4-5 LB/1,000 SF
TURF-TYPE TALL FESCUE	100%	6-8 LB/1,000 SF
HEAVY SHADE, WELL-DRAINED SOILS		
FINE FESCUES	100%	4-5 LB/1,000 SF
HEAVY SHADE, POORLY-DRAINED SOILS		
ROUGH BLUEGRASS	100%	2-3 LB/1,000 SF

TEMPORARY SEED MIXTURE		
SPECIES	% OF MIXTURE	SEED RATE
ANNUAL OR ITALIAN RYEGRASS	100%	4-5 LB/1,000 SF

SEED MIXTURE NOTES:
1. SEEDING AND TURFGRASS INFORMATION TAKEN FROM THE PENN STATE COLLEGE OF AGRICULTURAL SCIENCES. FOR ADDITIONAL INFORMATION REFER TO HTTP://PLANTSCIENCE.PSU.EDU/RESEARCH/CENTERS/TURF.
2. THE PERCENTAGE OF WEED SEEDS SHOULD NOT EXCEED 1.0% BY WEIGHT IN THE CONTAINER. GOOD QUALITY GRASS SEED USUALLY CONTAINS NO MORE THAN 0.5% WEED SEEDS.
3. SEEDS OR SEED MIXTURES CONTAINING TIMOTHY, MEADOW FESCUE, ORCHARDGRASS, TALL OATGRASS, ANNUAL RYEGRASS OR CLOVER ARE GENERALLY NOT SUGGESTED FOR TURFGRASS USE.
4. ALL SEEDING RATES IN THIS PUBLICATION ARE IN POUNDS PER 1000 SQUARE FEET. IF CONVERTING TO AN ACRE BASIS, MULTIPLY BY 43.
5. IT IS SUGGESTED THAT 3-5 VARIETIES OF KENTUCKY BLUEGRASS BE USED IN THE BLEND OR MIXTURE.
6. WHEREVER SEED AND MULCH IS APPLIED BY HYDROSEEDING METHODS, THE SEED AND MULCH SHOULD BE APPLIED IN SEPARATE APPLICATIONS WITH THE SEED BEING APPLIED FIRST AND THE MULCH SPRAYED ON TOP OF THE SEED.
7. IN CRITICAL AREAS (E.G. ADJACENT TO OR WITHIN 50 FEET OF STREAMS, PONDS, OR WETLANDS) A PROTECTIVE BLANKET SHOULD BE PROVIDED FOR ALL SEEDED AREAS.

ALL DOCUMENTS PREPARED OR FURNISHED BY ENGINEER ARE INSTRUMENTS OF SERVICE, AND ENGINEER RETAINS AN OWNERSHIP AND PROPERTY INTEREST (INCLUDING THE COPYRIGHT AND THE RIGHT OF REUSE) IN SUCH DOCUMENTS, WHETHER OR NOT THE PROJECT IS COMPLETED. OWNER SHALL HAVE A LIMITED LICENSE TO USE THE DOCUMENTS ON THE PROJECT, EXTENSIONS OF THE PROJECT, AND FOR RELATED USES OF THE OWNER, SUBJECT TO RECEIPT BY ENGINEER OF FULL PAYMENT FOR ALL SERVICES RELATING TO PREPARATION OF THE DOCUMENTS AND SUBJECT TO THE FOLLOWING LIMITATIONS: (1) OWNER ACKNOWLEDGES THAT SUCH DOCUMENTS ARE NOT INTENDED OR REPRESENTED TO BE SUITABLE FOR USE ON THE PROJECT UNLESS COMPLETED BY ENGINEER, OR FOR USE OR REUSE BY OWNER OR OTHERS ON EXTENSIONS OF THE PROJECT, ON ANY OTHER PROJECT, OR FOR ANY OTHER USE OR PURPOSE, WITHOUT WRITTEN VERIFICATION OR ADAPTATION BY ENGINEER; (2) ANY SUCH USE OR REUSE, OR ANY MODIFICATION OF THE DOCUMENTS, WITHOUT WRITTEN VERIFICATION, COMPLETION, OR ADAPTATION BY ENGINEER, AS APPROPRIATE FOR THE SPECIFIC PURPOSE INTENDED, WILL BE AT OWNER'S SOLE RISK AND WITHOUT LIABILITY OR LEGAL EXPOSURE TO ENGINEER OR TO ITS OFFICERS, DIRECTORS, MEMBERS, PARTNERS, AGENTS, EMPLOYEES, AND CONSULTANTS; (3) OWNER SHALL INDEMNIFY AND HOLD HARMLESS ENGINEER AND ITS OFFICERS, DIRECTORS, MEMBERS, PARTNERS, AGENTS, EMPLOYEES, AND CONSULTANTS FROM ALL CLAIMS, DAMAGES, LOSSES, AND EXPENSES, INCLUDING ATTORNEYS' FEES, ARISING OUT OF OR RESULTING FROM ANY USE, REUSE, OR MODIFICATION OF THE DOCUMENTS WITHOUT WRITTEN VERIFICATION, COMPLETION, OR ADAPTATION BY ENGINEER; AND (4) SUCH LIMITED LICENSE TO OWNER SHALL NOT CREATE ANY RIGHTS IN THIRD PARTIES.

REV	DATE	COMMENTS
3	02/15/18	LAYOUT
2	06/15/17	PER TWP ENG
1	05/12/17	PER TWP ENG

SEAL:

PROJECT:	SINGLE FAMILY RESIDENTIAL BUILDING ADDITION
PROJECT ADDRESS:	218 SPRING ROAD, MALVERN, PA 19355
MUNICIPALITY:	WILLISTOWN TOWNSHIP
COUNTY:	CHESTER COUNTY
PLAN SET:	SOIL AND EROSION AND STORMWATER PERMIT PLANS
SHEET NAME:	EROSION AND SEDIMENTATION CONTROL DETAILS

PREPARED FOR:
OWNER / APPLICANT
MONKEY FARM, LLC
P.O. BOX 1227
STUART, FL 34995

DATE:	APRIL 11, 2017
SCALE:	NO SCALE
ONE CALL NUMBER:	2016-118-3739
DRAWN BY:	CCY
PROJECT NUMBER:	16-037

PREPARED BY:
YOHN ENGINEERING, LLC
555 SECOND AVENUE, SUITE B-205
COLLEGEVILLE, PA 19426
610-489-4580
WWW.YOHNENGINEERING.COM

YOHN Engineering, LLC